higher ed & training
Department:
Higher Education

VHEMBE T.V.E.T COLLEGE

ASSESSMENT TASK COVER

Assessment task:	ASSIGNMENT NO 1
Programme:	ENGINEERING
Subject:	MATHEMATICS
Level:	4
Examiner/Assessor:	MATEVHUTEVHU T

QUESTION PAPER

Outcomes to be assessed: (State Topics, SO's and LO's)
1.1-1.2 LS'O 1.1.1 - 1.2.2
2.1 LSO2.2.1.1-1.2.2.

Date/due date:	20-25 FEBRUARY 2025					
Duration:	90 MINUTES					
Marks:	50					
Moderator:	Name	MADZUNYE H	Signature		Date:	10/02/2026

INSTRUCTIONS AND INFORMATION

1. **Answer ALL the questions.**
2. **Read ALL the questions carefully..**
3. **Number the answers correctly according to the numbering system used in this question paper.**
4. **Clearly show ALL calculations, diagrams, graphs, etc you have used in determining the answers.**
5. **An approved calculator may be used, unless otherwise stated.**
6. **Drawing instruments including rulers, pairs of compass and protractor may be used.**
7. **Write neatly and legibly.**

This question paper consists of 6 pages

Various options are given as possible answers to the following Questions. Choose the answer and write only the letter (A-D) next to the question number (1.1.1-1.1.5 in the answer book.

1.1.1

If $if\ z = -2 - 3i$ is ploted on a complex plane, then it will be in the following quadrant :

A $first$

B $second$

C $third$

D $Fourth$ **(2)**

1.1.2

$.i^{\sqrt{64}}\ simplified\ is\ equal\ to$

A $15i^{14}$

B $\frac{i}{4}$

C $-i$

D 1 (2)

1.1.3

The factors for $x^2 + 25$ *are*

A $x(x+25)$

B $(x-5)(x+5)$

C $(x-5i)(x+5i)$

D $(x+5)(x+5)$ (2)

1.1.4

If $Z = 5Cis\,60^0)$ *then* $Z^3 =$.....

A $5^3Cis(\,60^0)^3$

B $5^3\,Cis(60^0+3)$

C $15Cis(3\times 60^0)$

D $5^3Cis(3\times 60^0)$ (2)

1.1.5
Solve for y *if* $5 - yi = 15 - 3i$
Where $\sqrt{-1} = i$

A $y = -3i$

B y =3

C y = -3

D y=5-3i (2)

1.2 Simplify $\frac{3}{5}(cos83^0 + isin83^0) \times 3(cos225^0 + isin225^0)$ *and express your answer in the form* $a + bi$ (2)

1.3 Solve for x *and* y *if* $x^2yi^8 - y^2i^7 + 6xi^6 - xi = 9i^2 - 7i$ (4)

1.4 Simplify $\frac{3-4i}{2-i} - \frac{1-5i}{-i+3}$ *leave your answer in the form* $a + bi$ (4)

1.5 Use De Moivre's theorem and leave your answer in polar form with positive argument.

$$\frac{(4-3i)-(i^2+i^3)}{(2Cis120^o)^5}$$ **(5)**

1.6 The Expression $f(x) = -2x^3 - 3x^2 + 13bx + 20$ ***has the remainder of*** -56 ***when it is divided by*** $x + a$. ***If it is also given that*** $(x - a)$ ***is a factor of*** $-2x^3 - 3x^2 + 13bx + 20$, Apply remainder and factor theorem to determine two values of a. Hence determine the value of b. **(4)**

1.7 Add $Z_1 = \sqrt{3}Cis60^0$ ***and*** $Z_2 = 2Cis45^0$ ***and leave your answer in rectangular form*** $a + bi$ **(2)**

1.8 Simplify and leave your answer in rectangular form

$$\frac{(1-i)(2i+2)}{2+3i}$$ **(3)**

[34]

QUESTION 2

2.1 The Argand Diagram below represents two Complex Numbers:

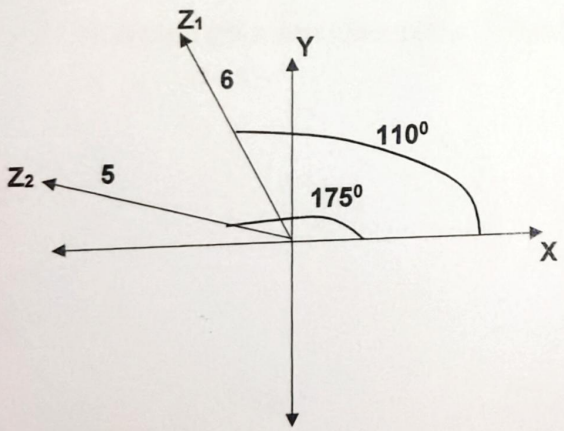

2.1.1 Write Z_1 and Z_2 in polar form **(2)**

2.1.2 Determine $(Z_1)(Z_2)$ and leave your answer in standard form **(3)**

2.1.3 Determine $Z_1 - Z_2$ **(3)**

2.2 Solve for x *in the equation* $2x^2 + 2x + 5 = 0$ *and express any non – real solutions in the form* $a + bi$

(3)

2.3 Given: $g(x) = 2x^2 + 3$

a) Write the invers equation of g (1)
b) Sketch the inverse graph of g (3)
c) Is the graph of inverse of g function or non function (1)

[16]

TOTAL=50

VHEMBE T.V.E.T COLLEGE

10/02/2026

FORMULA SHEET

1. $Z = r\cos\theta + r\,j\sin\theta$

2. $Z = a \pm bj$ **or** $Z = a \pm bi$ *where* $i = j = \sqrt{-1}$

3. $r\angle\theta = r\ cis\ \theta$

4. $f'(x) = \lim_{h\to 0}\dfrac{f(x+h)-f(x)}{h}$

5. $\dfrac{d}{dx}x^n = nx^{n-1}$

6. $y = ka^x = ka^{x\ln a}$

7. $\dfrac{d}{dx}k = 0$

8. $\dfrac{dy}{dx} = u.\dfrac{dv}{dx} + v.\dfrac{du}{dx}$ **or** $\dfrac{d}{dx}[f(x).g(x)] = f(x)\ g'(x) + f'(x)\ g(x)$

9. $\dfrac{dy}{dx} = \dfrac{v\dfrac{du}{dx} - u\dfrac{dv}{dx}}{v^2}$ **or** $\dfrac{d}{dx}\left[\dfrac{f(x)}{g(x)}\right] = \dfrac{g(x)\ f'(x) - f(x)\ g'(x)}{[g(x)]^2}$

10. $\dfrac{dy}{dx} = \dfrac{du}{dx}\times\dfrac{dy}{du}$ **or** $\dfrac{d}{dx}f(g(x)) = f'(g(x))\ g'(x)$

11. **If** $y = \ln kx$ **then** $\dfrac{dy}{dx} = \dfrac{k}{kx}$ **or if** $f(x) = \ln kx$ **then** $f'(x) = \dfrac{k}{kx}$

12. **If** $y = e^x$ **then** $\dfrac{dy}{dx} = e^x$ **or if** $f(x) = e^x$ **then** $f'(x) = e^x$

13. **If** $y = e^{kx}$ **then** $\dfrac{dy}{dx} = ke^{kx}$ **or if** $f(x) = e^{kx}$ **then** $f'(x) = ke^{kx}$

14. If $y = \sin x$ then $\dfrac{dy}{dx} = \cos x$ **or if** $f(x) = \sin x$ then $f'(x) = \cos x$

15. If $y = \cos x$ then $\frac{dy}{dx} = -\sin x$ or if $f(x) = \cos x$ then $f'(x) = -\sin x$

16 If $y = \tan x$ then $\frac{dy}{dx} = \sec^2 x$ or if $f(x) = \tan x$ then $f'(x) = \sec^2 x$

-2-

17. If $y = \cot x$ then $\frac{dy}{dx} = -\operatorname{cosec}^2 x$ or if $f(x) = \cot x$ then $f'(x) = -\operatorname{cosec}^2 x$

18. If $y = \sec x$ then $\frac{dy}{dx} = \sec x \tan x$ or if $f(x) = \sec x$ then $f'(x) = \sec x \tan x$

19. If $y = \operatorname{cosec} x$ then $\frac{dy}{dx} = -\operatorname{cosec} x \cot x$ or
if $f(x) = \operatorname{cosec} x$ then $f'(x) = -\operatorname{cosec} x \cot x$

20. If $y = \ln \sec x$ then $\frac{dy}{dx} = \tan x$ or if $f(x) = \ln \sec x$ then $f'(x) = \tan x$

21. $\int x^n \, dx = \frac{x^{n+1}}{n+1} + c$

22. $\int k x^n \, dx = k \int x^n \, dx$ **where k is a constant.**

23. $\int [f(x) \pm g(x)] \, dx = \int f(x) \, dx \pm \int g(x) \, dx$

24. $\int \frac{k}{x} \, dx = k \ln x + c$

25. $\int k a^x \, dx = \frac{k a^x}{\ln a} + c$

26. $\int e^{kx} \, dx = \frac{e^{kx}}{k} + c$

27. $\int \sin x \, dx = -\cos x + c$

28. $\int \cos x \, dx = \sin x + c$

29. $\int \tan x \, dx = \ln \sec x + c$