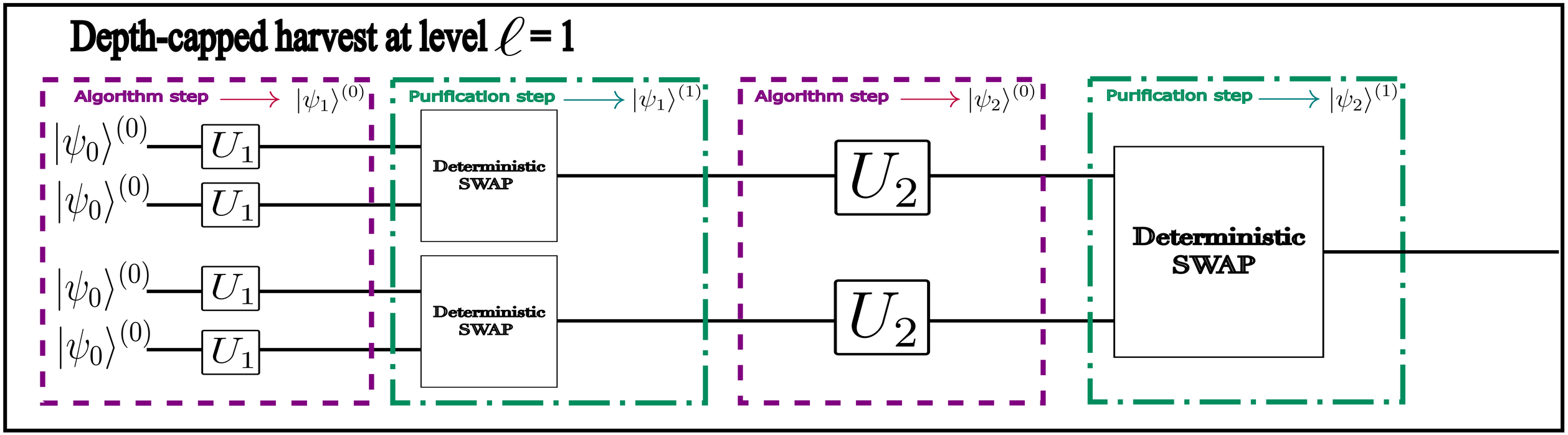
Depth-capped harvest at level $\ell = 1$
Algorithm step
$|\psi_1\rangle^{(0)}$
Purification step
$|\psi_1\rangle^{(1)}$
Algorithm step
$|\psi_2\rangle^{(0)}$
Purification step
$|\psi_2\rangle^{(1)}$
$|\psi_0\rangle^{(0)}$
U_1
Deterministic SWAP
U_2

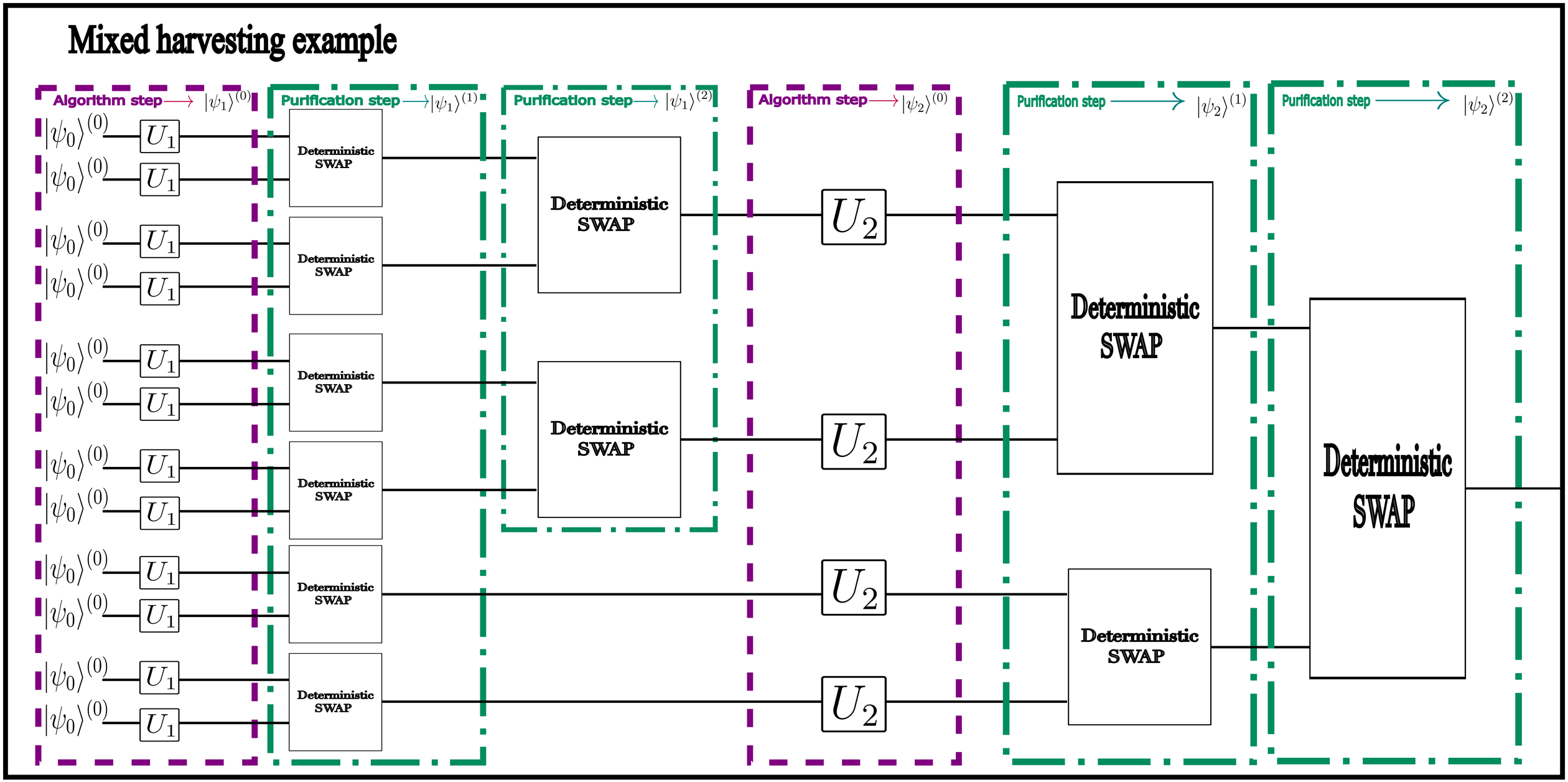
Mixed harvesting example
Algorithm step
$|\psi_1\rangle^{(0)}$
Purification step
$|\psi_1\rangle^{(1)}$
Purification step
$|\psi_1\rangle^{(2)}$
Algorithm step
$|\psi_2\rangle^{(0)}$
Purification step
$|\psi_2\rangle^{(1)}$
Purification step
$|\psi_2\rangle^{(2)}$
$|\psi_0\rangle^{(0)}$
U_1
Deterministic SWAP
U_2