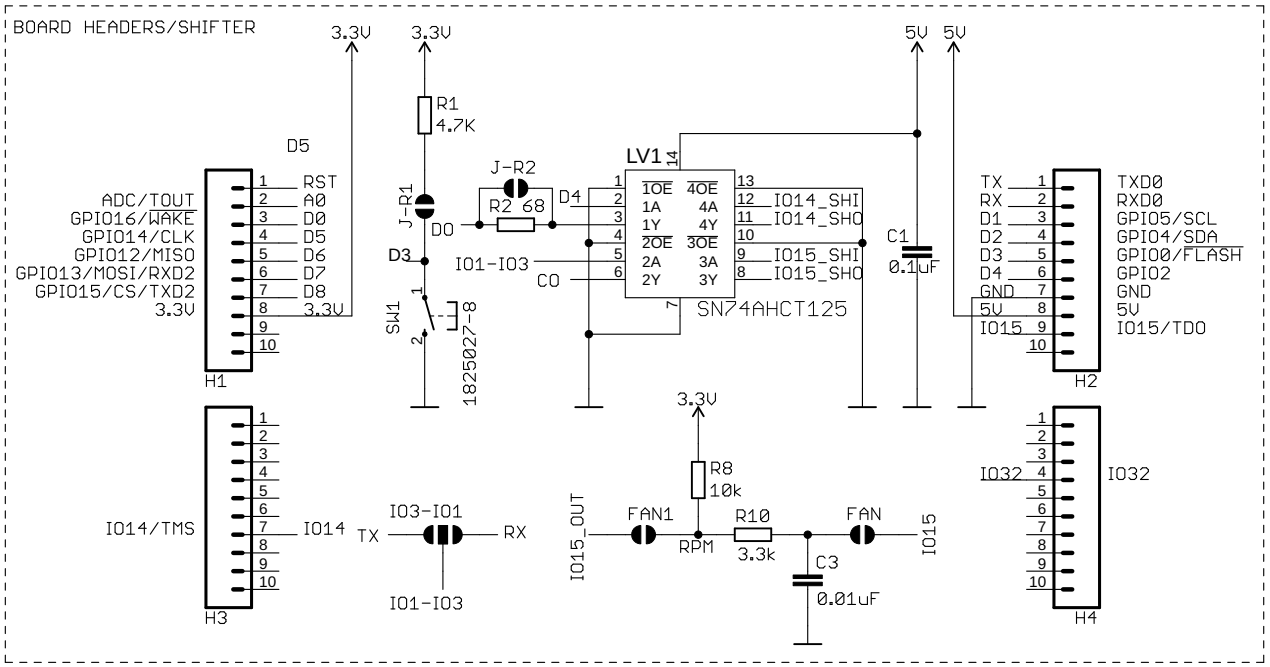

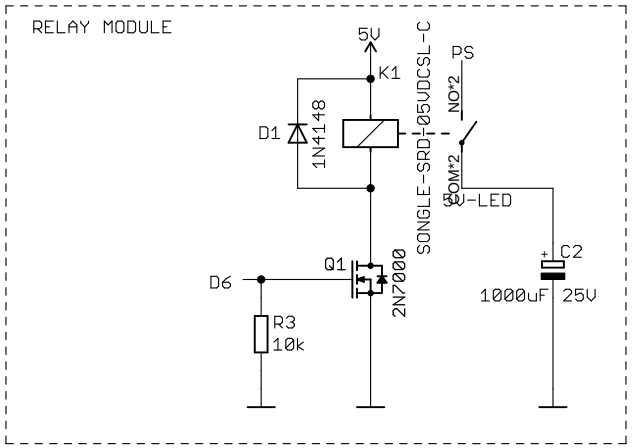

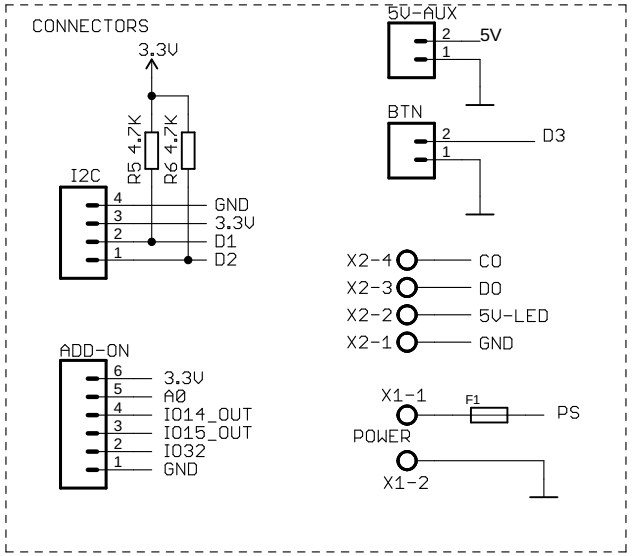

PINOUT

ESP8266

D3-GPIO0-Default button
TX-GPIO1-CLK APA102
RX-GPIO3-LED output D2
D4-GPIO2-Default LED output D1
D5-GPIO14-IR receiver
D6-GPIO12-Relay
D7-GPIO13-Dallas sensor
D1-GPIO5-SCL
D2-GPIO4-SDA
A0-Analog in

ESP32

IO17-Default button
TX-GPIO1-CLK APA102
RX-GPIO3-LED output D2
IO16-Default LED output D1
IO18-IR receiver
IO19-Relay
IO23-Dallas sensor
IO22-SCL
IO21-SDA
IO36-Analog in
IO15-WS/(fan RPM)
IO14-SCK
IO32-SD/(fan PWM)

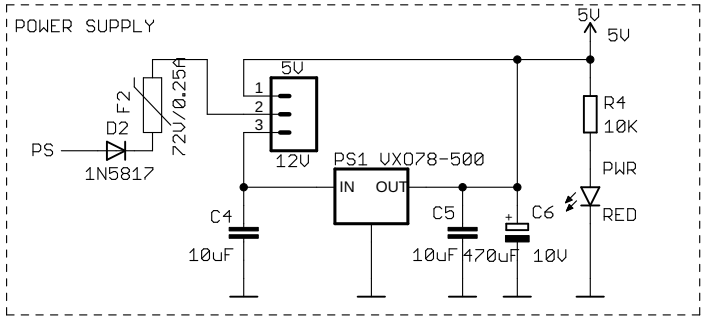

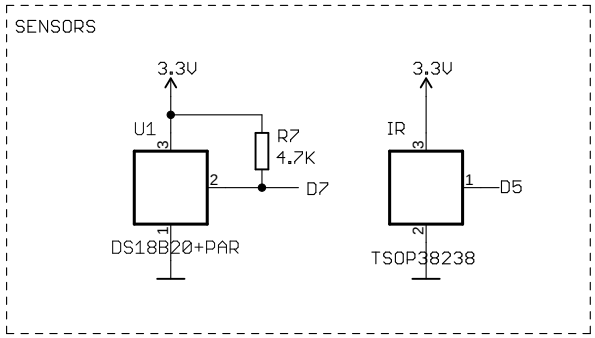

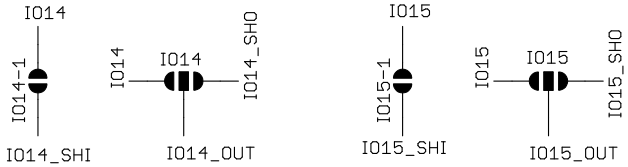

Logo

Logo

TITLE: WLED_Wemos_shield-v3.0	
Document Number:	REV:
Date: 1/4/22 6:59 PM	Sheet: 1/1