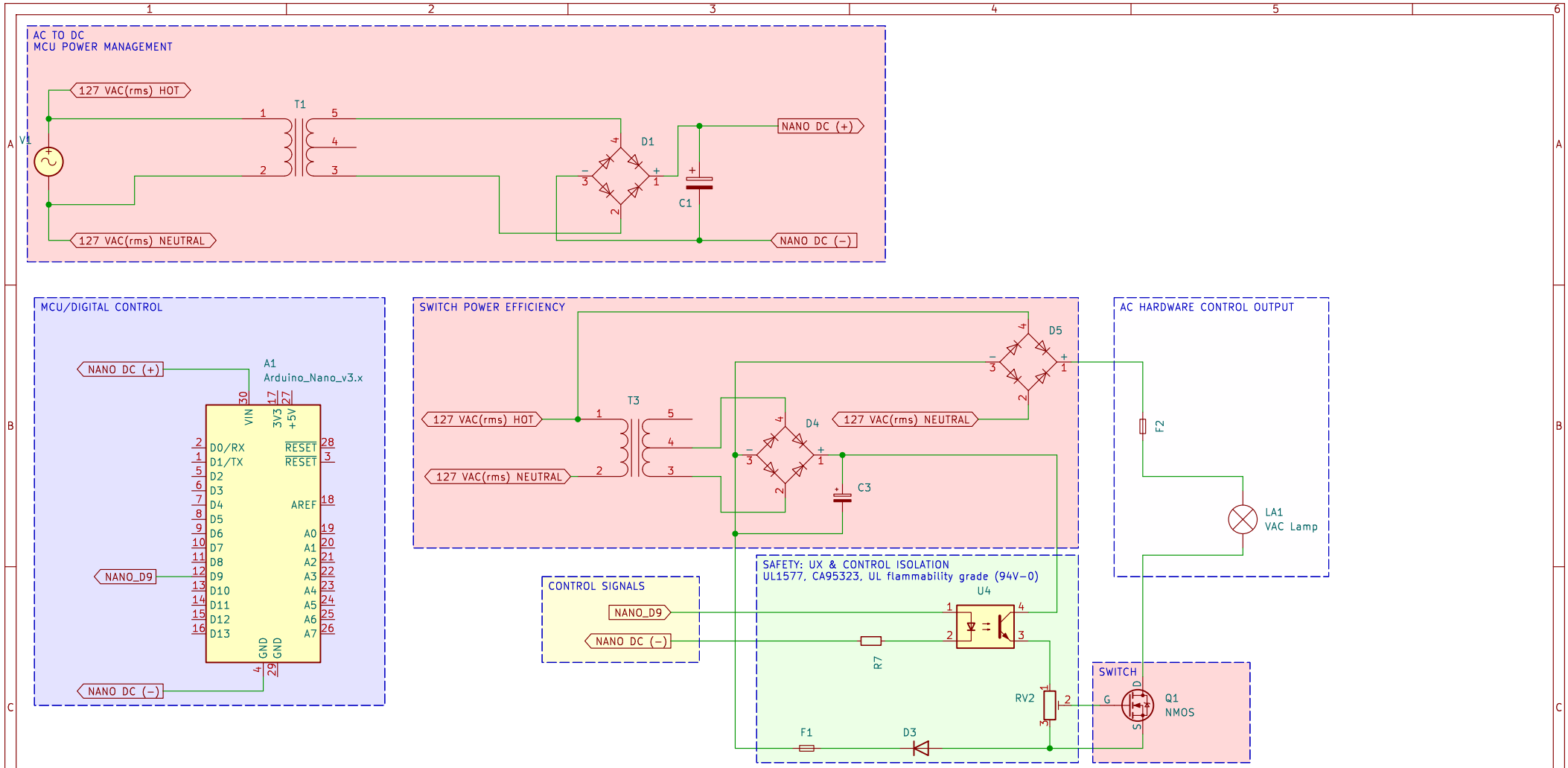

ID	Component	Use	Reference	Qty
A1	Arduino Nano v3.x	DC to AC Control	FR3, FR4	1
C1	Polarized capacitor	AC to DC sourcing	FR1, FR2	1
C3	Polarized capacitor	AC to DC sourcing	FR1, FR2	1
D1	Diode Bridge Rectifier	Full AC rectification	FR1, FR2	1
D3	Diode	Transient shielding	FR1, FR2	1
D4,D5	Diode Bridge Rectifier	Full AC rectification	FR1, FR2	2
F1,F2	Fuse	Overcurrent protection		2
LA1	VAC Lamp	AC light bulb		1
Q1	NMOS	Power MOSFET switch	FR8	1
R7	Resistor	Current limiting resistor		1
RV2	Potentiometer	Voltage calibration and division		1
T1,T3	Transformer	VAC peak voltage attenuation	FR1, FR2	2
U4	Optoisolator	Overvoltage isolation, advised: UL1577, CA95323, UL flammability grade (94V-0)	FR6	1
V1	Mains	127 VAC, 60Hz	FR1, FR2	1

Further reading/research media:
FR1. Simon Monk, Electronics Cookbook. Published by O'Reilly Media, Inc.
FR2. Paul Scherz, Simon Monk. Practical Electronics for Inventors, Fourth Edition, 4th Edition. Published by McGraw−Hill Education TAB. e−ISBN 978−1−25−958755−9.
FR3. ARDUINO. Arduino Nano Reference Manual. SKU: A000005.
FR4. ARDUINO. Arduino Nano Wiring Schematic. https://www.arduino.cc/en/uploads/Main/Arduino_Nano−Rev3.2−SCH.pdf.
FR5. TEXAS INSTRUMENTS. LM1117. Sheet No.: SNOS412Q - FEBRUARY 2000 - REVISED JANUARY 2023.
FR6. SHARP. PC817XxNSZ1B Series. Sheet No.: OP18002EN.
FR7. ATMEL. ATMega328p. Sheet No.: 7810D−AVR−01/15.
FR8. INFINEON. IRFP250NPbF. Sheet No.: Rev. 2.1, 2024−10−08.

Contact: https://sites.google.com/view/b−eng−jarl/home

Sheet: /
File: MOSFET AC Switch.kicad_sch

Title: AC Switch 'Blink' Project

Size: A4	Date: 2025−04−07	**Rev: 1**
KiCad E.D.A. 9.0.1		Id: 1/1