ARDUINO MICRO

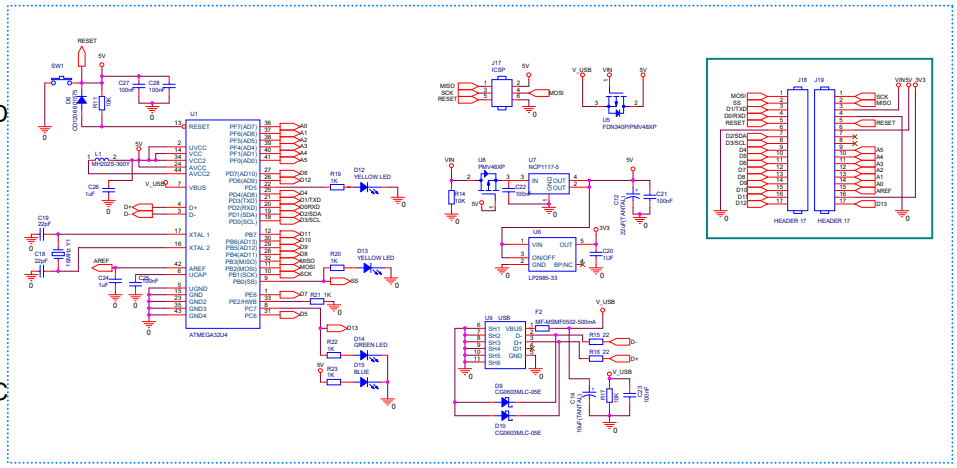

	AKA DREAMWALKER
Title	ARDUINO SMART WATCH
Size A2	Document Number DESIGNED BY JAICHANGPARK
Rev 1.0	
Date: Thursday, March 09, 2017	Sheet 1 of 1