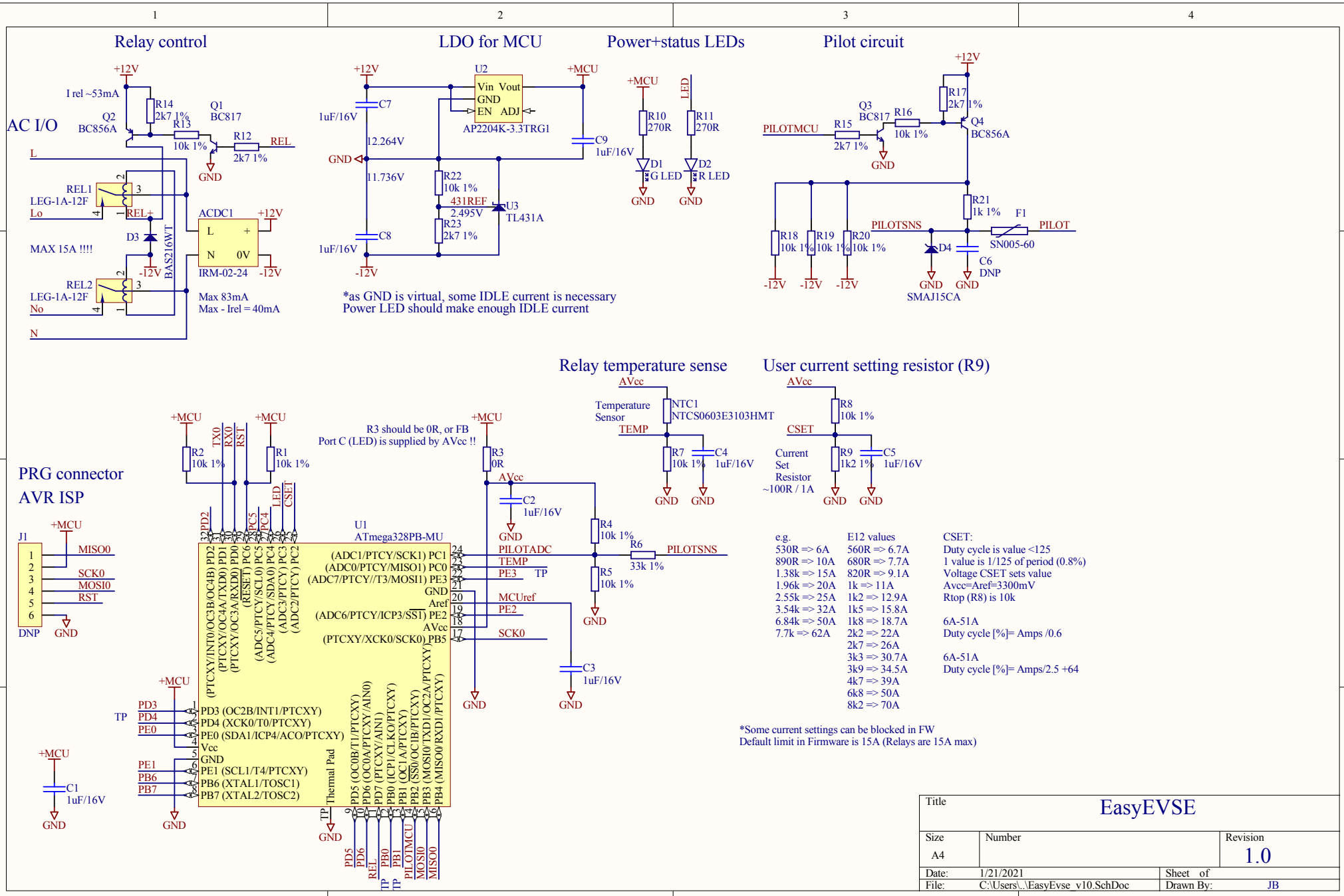
Relay control
AC I/O
+12V
I rel ~53mA
R14 2k7 1%
Q1 BC817
Q2 BC856A
R13 10k 1%
R12 2k7 1%
REL
GND
L
REL1 LEG-1A-12F
Lo
REL+
D3
BAS216WT
MAX 15A !!!!
-12V
REL2 LEG-1A-12F
No
N
ACDC1
L +
N 0V
IRM-02-24
Max 83mA
Max - Irel = 40mA
LDO for MCU
U2
Vin Vout
GND
EN ADJ
AP2204K-3.3TRG1
+MCU
C7 1uF/16V
12.264V
11.736V
R22 10k 1%
431REF 2.495V
U3 TL431A
R23 2k7 1%
C8 1uF/16V
C9 1uF/16V
*as GND is virtual, some IDLE current is necessary
Power LED should make enough IDLE current
Power+status LEDs
LED
R10 270R
R11 270R
D1 G LED
D2 R LED
Pilot circuit
PILOTMCU
R15 2k7 1%
Q3 BC817
R16 10k 1%
R17 2k7 1%
Q4 BC856A
R21 1k 1%
F1 SN005-60
PILOTSNS
PILOT
R18 10k 1%
R19 10k 1%
R20 10k 1%
D4 SMAJ15CA
C6 DNP
Relay temperature sense
AVcc
Temperature Sensor
NTC1 NTCS0603E3103HMT
TEMP
R7 10k 1%
C4 1uF/16V
User current setting resistor (R9)
R8 10k 1%
CSET
Current Set Resistor ~100R / 1A
R9 1k2 1%
C5 1uF/16V
PRG connector
AVR ISP
J1
MISO0
SCK0
MOSI0
RST
DNP
R2 10k 1%
R1 10k 1%
TX0
RX0
RST
LED
CSET
R3 should be 0R, or FB
Port C (LED) is supplied by AVcc !!
R3 0R
C2 1uF/16V
U1
ATmega328PB-MU
(ADC1/PTCY/SCK1) PC1
(ADC0/PTCY/MISO1) PC0
(ADC7/PTCY//T3/MOSI1) PE3
Aref
(ADC6/PTCY/ICP3/SS1) PE2
(PTCXY/XCK0/SCK0) PB5
PILOTADC
TEMP
PE3
TP
MCUref
PE2
SCK0
R4 10k 1%
R6 33k 1%
R5 10k 1%
C3 1uF/16V
PD3 (OC2B/INT1/PTCXY)
PD4 (XCK0/T0/PTCXY)
PE0 (SDA1/ICP4/ACO/PTCXY)
Vcc
GND
PE1 (SCL1/T4/PTCXY)
PB6 (XTAL1/TOSC1)
PB7 (XTAL2/TOSC2)
Thermal Pad
C1 1uF/16V
e.g.
530R => 6A
890R => 10A
1.38k => 15A
1.96k => 20A
2.55k => 25A
3.54k => 32A
6.84k => 50A
7.7k => 62A
E12 values
560R => 6.7A
680R => 7.7A
820R => 9.1A
1k => 11A
1k2 => 12.9A
1k5 => 15.8A
1k8 => 18.7A
2k2 => 22A
2k7 => 26A
3k3 => 30.7A
3k9 => 34.5A
4k7 => 39A
6k8 => 50A
8k2 => 70A
CSET:
Duty cycle is value <125
1 value is 1/125 of period (0.8%)
Voltage CSET sets value
Avcc=Aref=3300mV
Rtop (R8) is 10k
6A-51A
Duty cycle [%]= Amps /0.6
6A-51A
Duty cycle [%]= Amps/2.5 +64
*Some current settings can be blocked in FW
Default limit in Firmware is 15A (Relays are 15A max)
Title
EasyEVSE
Size
A4
Number
Revision
1.0
Date: 1/21/2021
Sheet of
File: C:\Users\..\EasyEvse_v10.SchDoc
Drawn By: JB