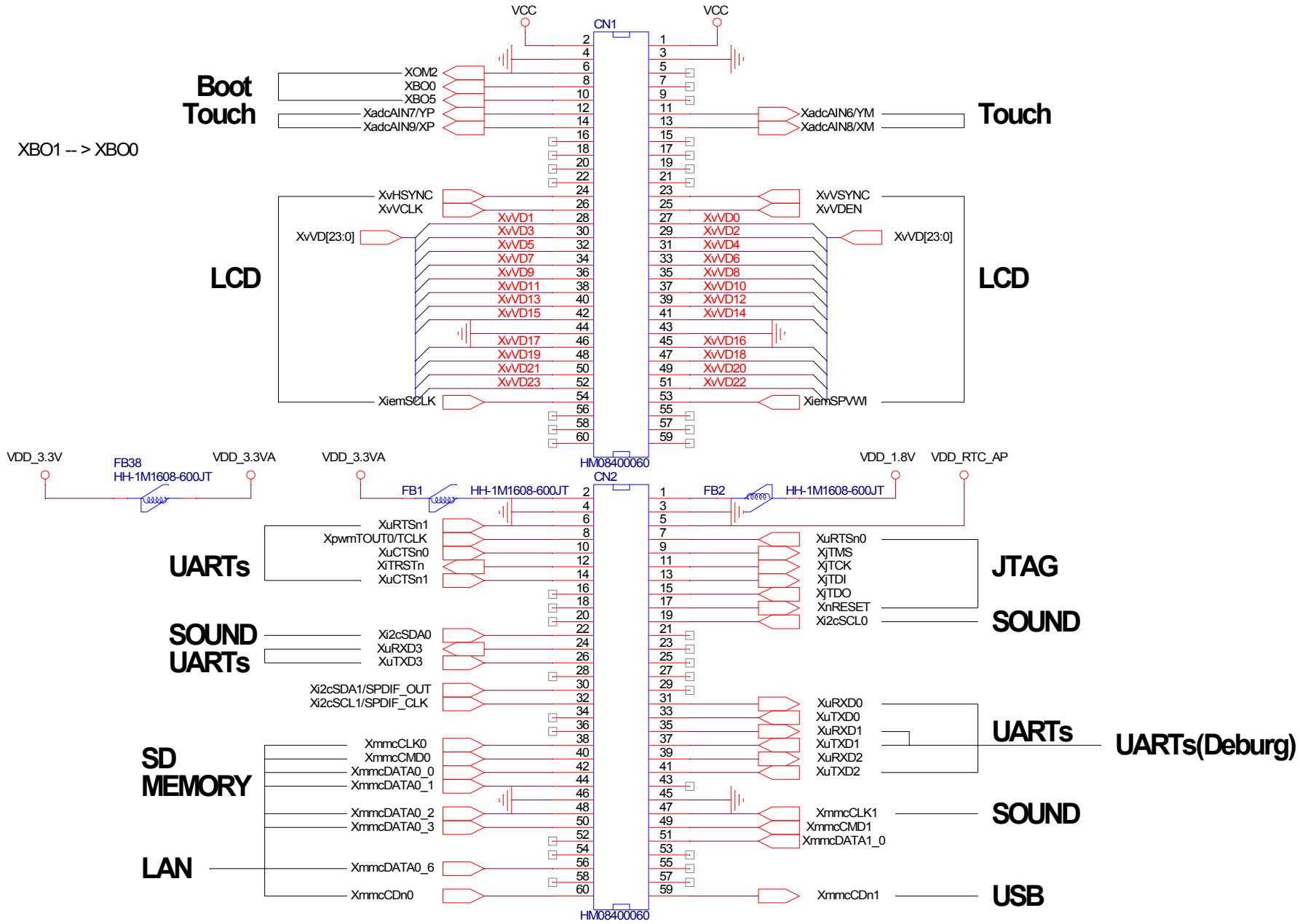

Design	<dname>	JMTech	JUNGMIN TECH.
Checked	<cname>	Title: JMT-CCP-BASE	
Approval	<aname>	Size: A4 / Document Number: JMT-CCP-BASE / CONNECTOR-1	Rev
		Date: Thursday, January 10, 2013	Sheet 1 of 13

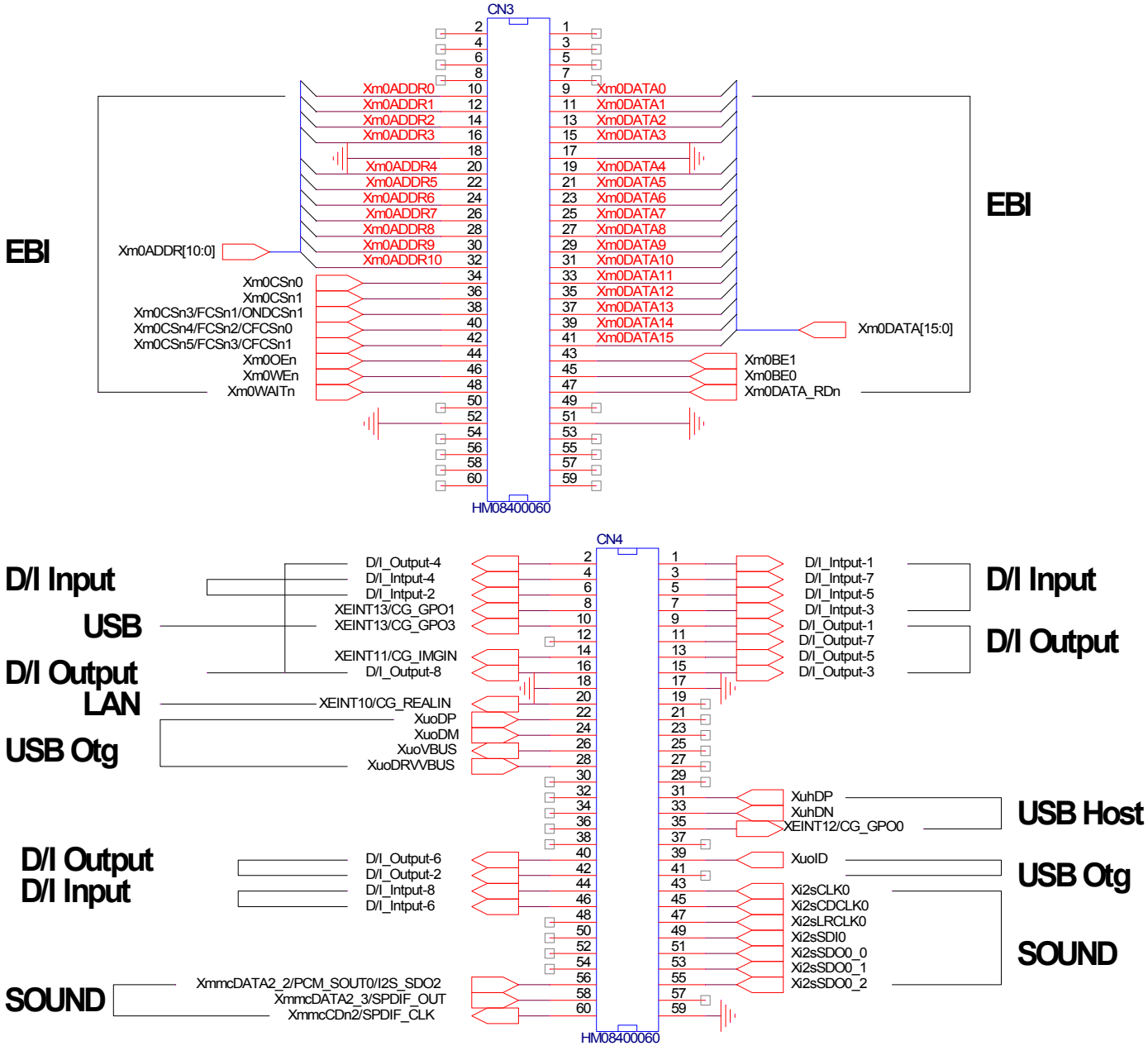

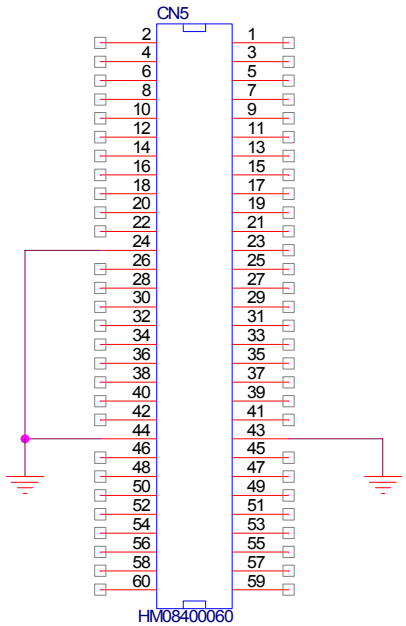

Design	<dname>	JMTech	JUNGMIN TECH.
Checked	<cname>	Title: JMT-CCP-BASE	
Approval	<aname>	Size: A4 / Document Number: JMT-CCP-BASE / CONNECTOR-2	Rev
		Date: Thursday, January 10, 2013	Sheet 2 of 13

POWER ON/OFF

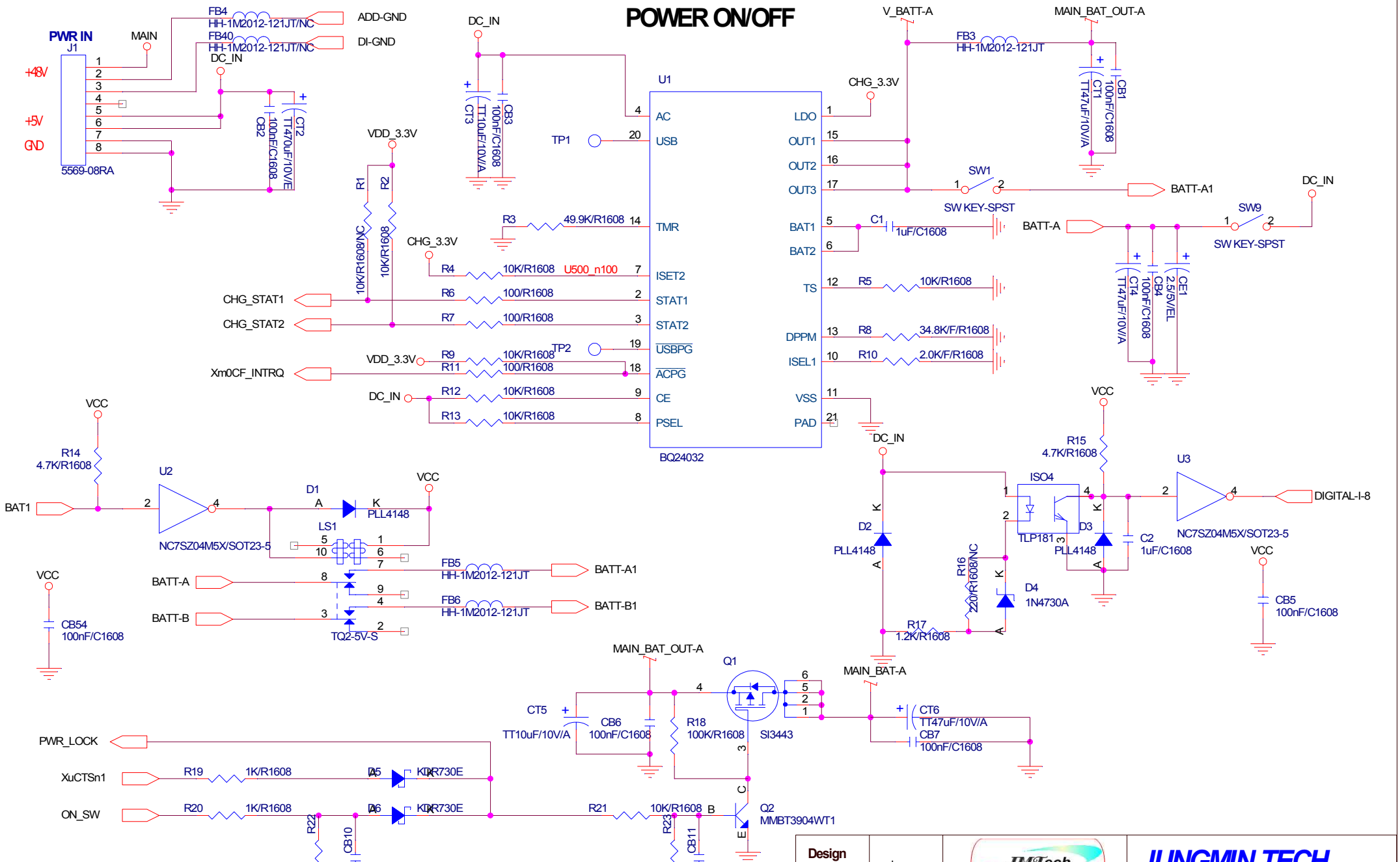

Design	<dname>	JMTech	JUNGMIN TECH.
Checked	<cname>	Title: JMT-CCP-BASE	
Approval	<aname>	Size: A4 / Document Number: JMT-CCP-BASE / POWER-1	Rev
		Date: Thursday, January 10, 2013	Sheet 3 of 13

POWER ON/OFF

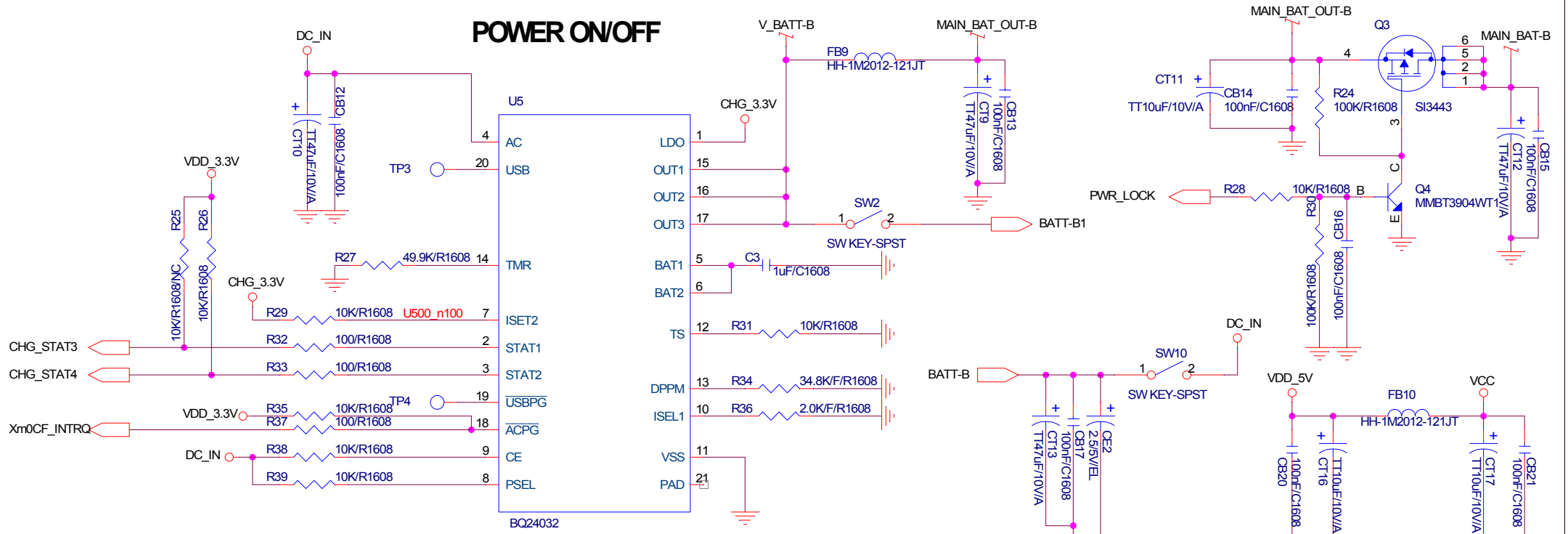

5.0V DC-DC

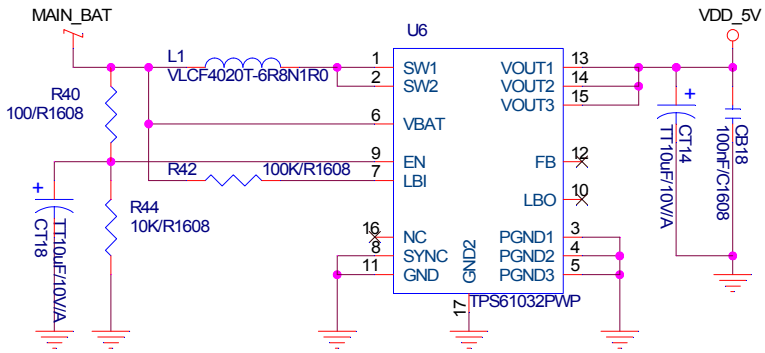

5.0V DC-DC

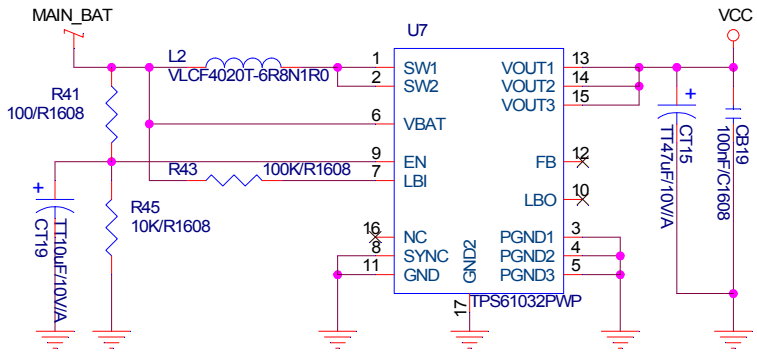

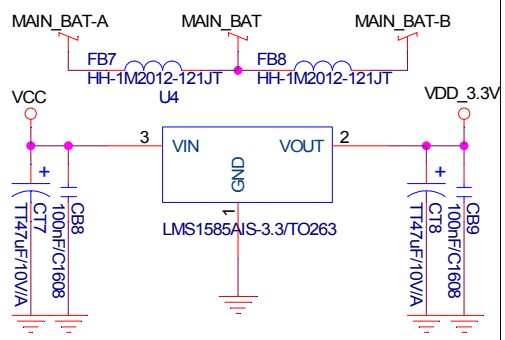

3.0V DC-DC for RTC

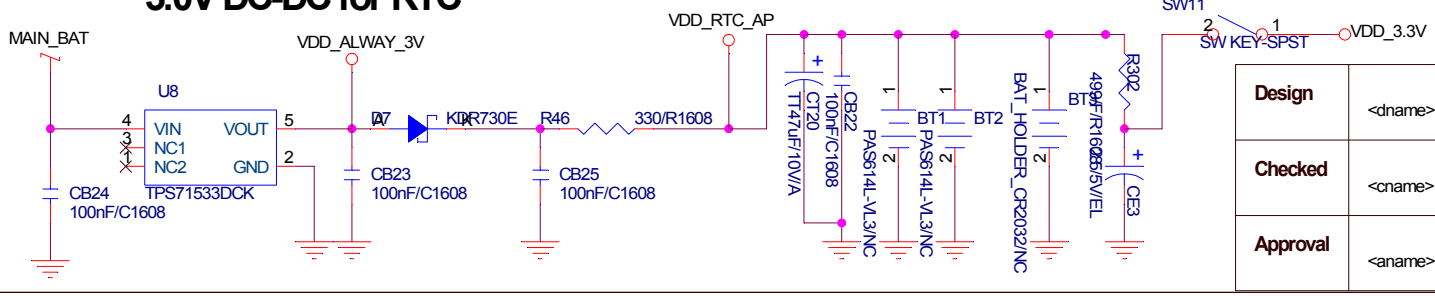

Design	<dname>	JMTech	JUNGMIN TECH.
Checked	<cname>	Title: JMT-CCP-BASE	
Approval	<aname>	Size: A4 / Document Number: JMT-CCP-BASE / POWER-2	Rev
		Date: Thursday, January 10, 2013	Sheet 4 of 13

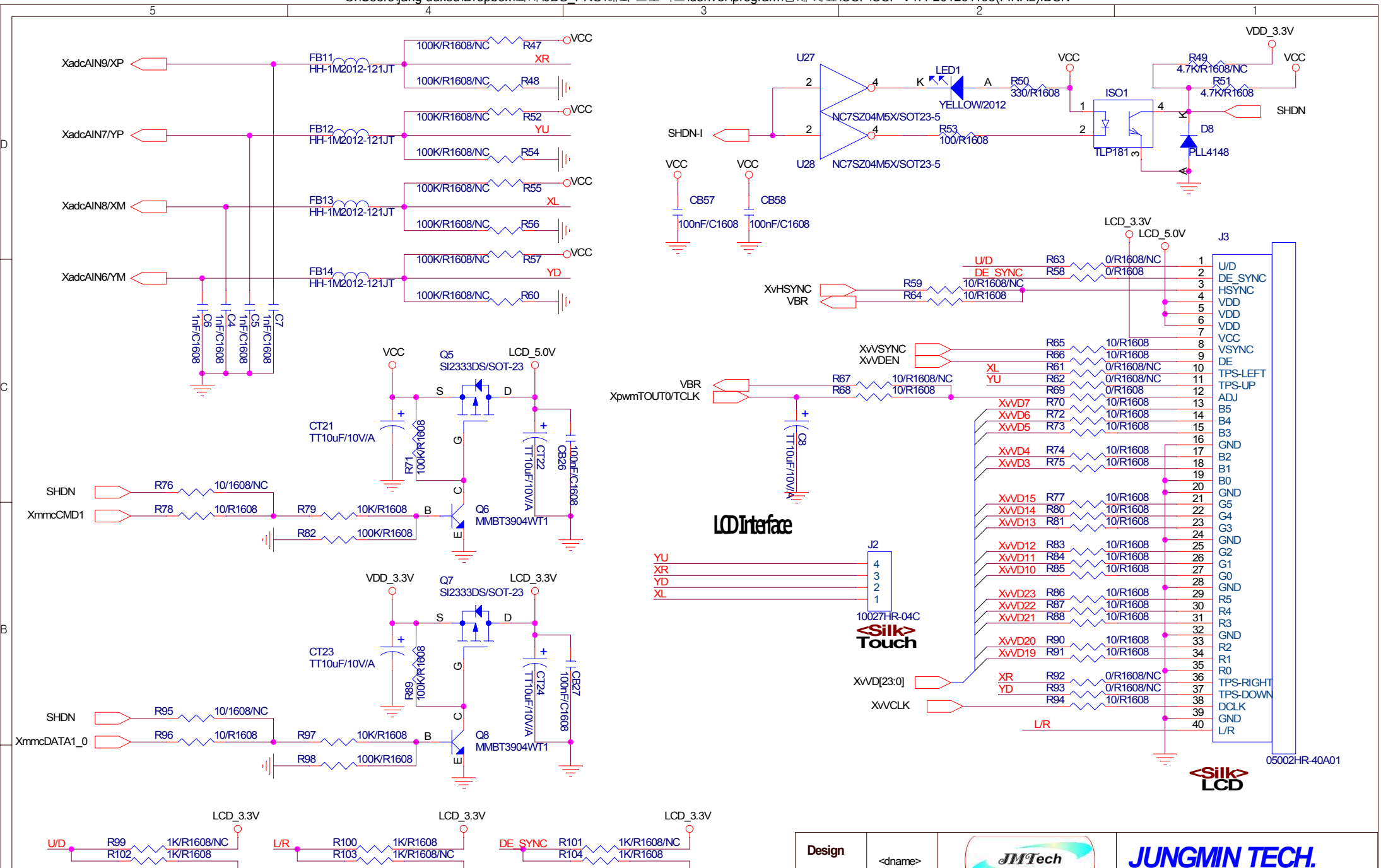

1	OPPOSITE
0	NORMALL

1	NORMALL
0	OPPOSITE

1	DE MODE
0	SYNC MODE

Design	<dname>	JMTech	JUNGMIN TECH.
Checked	<cname>	Title: JMT-CCP-BASE	
Approval	<aname>	Size: A4 / Document Number: JMT-CCP-BASE / LCD	Rev
		Date: Thursday, January 10, 2013	Sheet 5 of 13

5.1CH I2S Audio CODEC

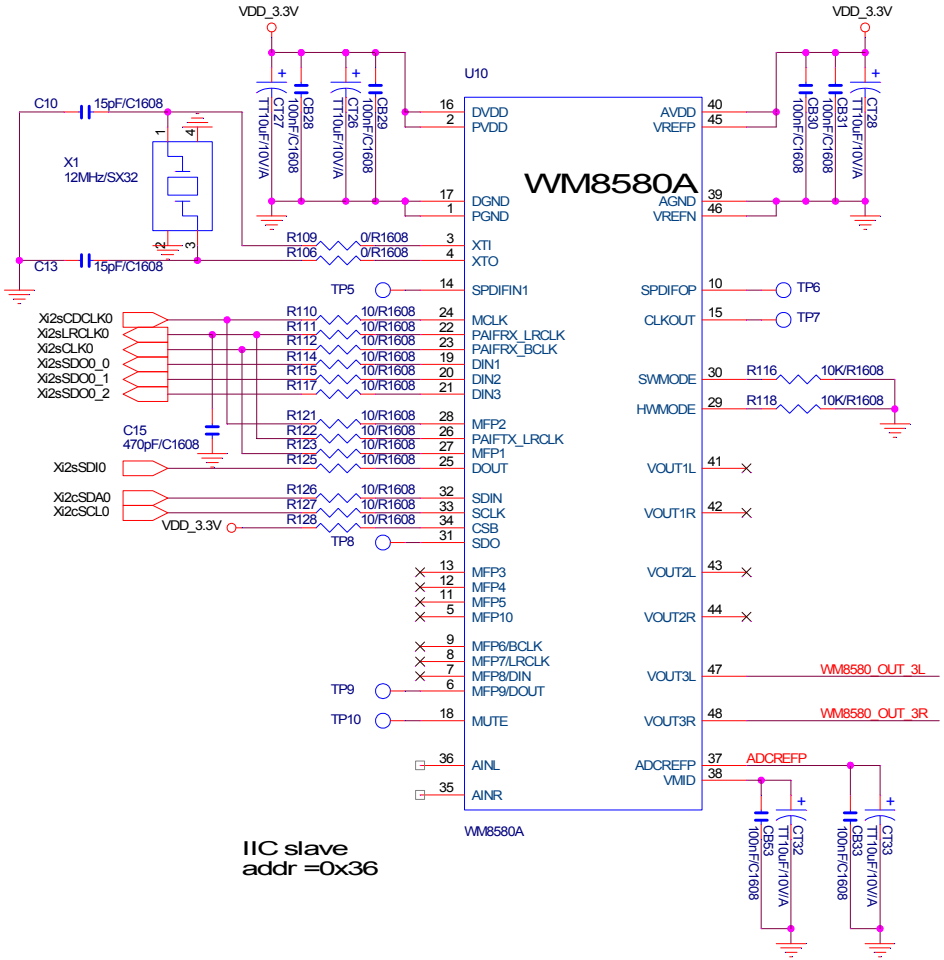

Speaker OUT

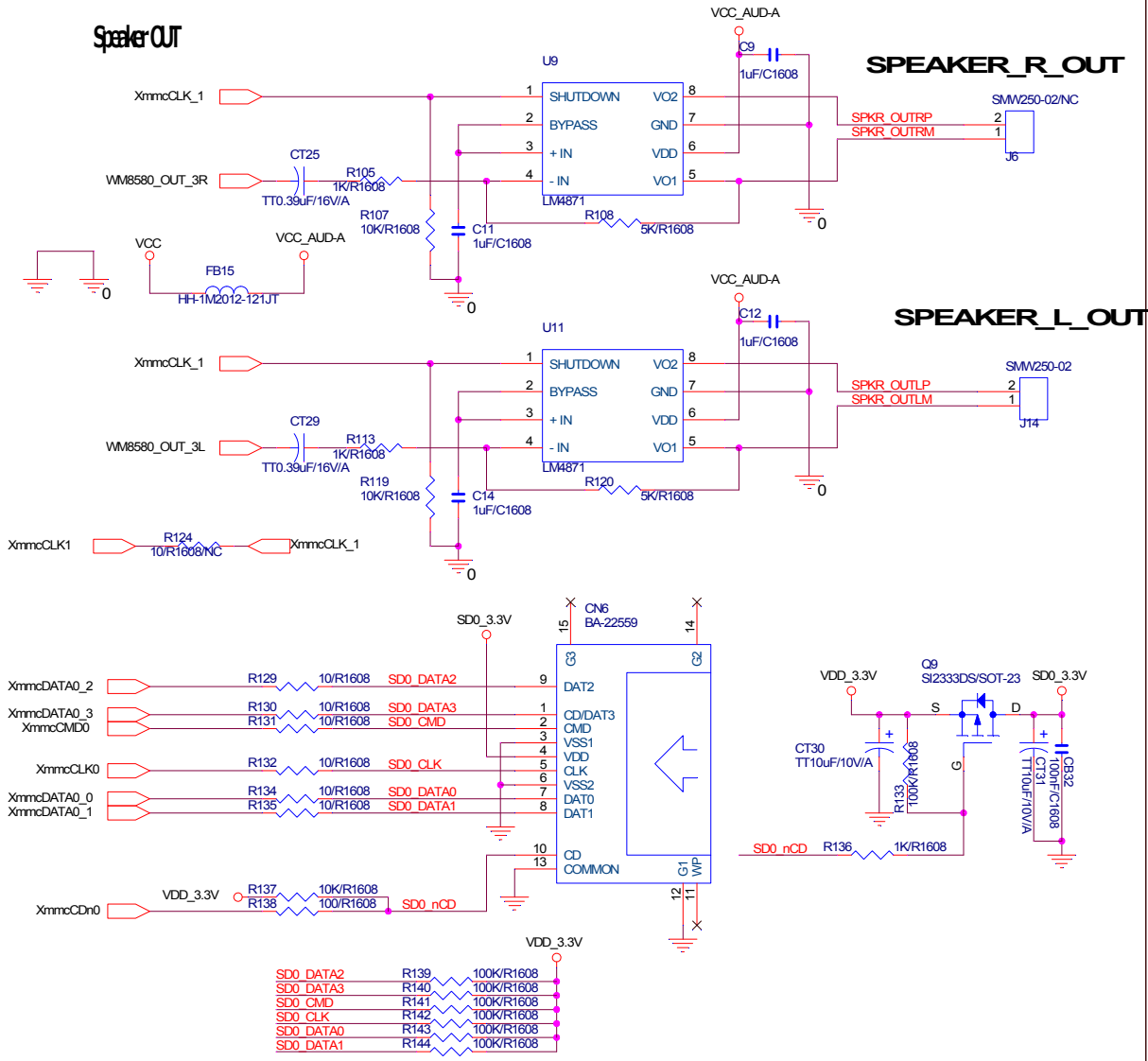

Design	<dname>	JMTech	JUNGMIN TECH.
Checked	<cname>	Title: JMT-CCP-BASE	
Approval	<aname>	Size: B / Document Number: JMT-CCP-BASE / AUDIO,SDCARD	Rev
		Date: Thursday, January 10, 2013	Sheet 6 of 13

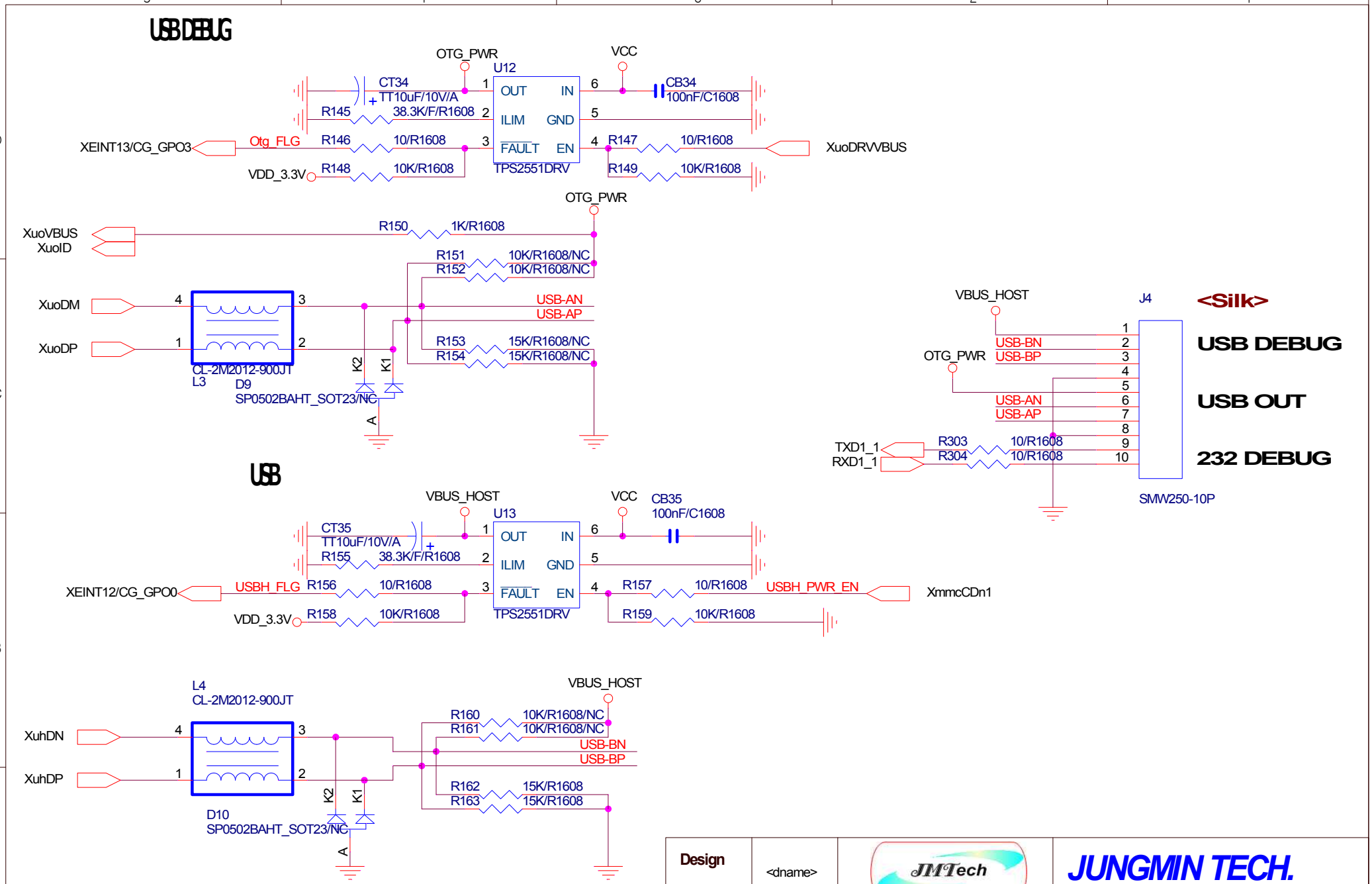

Design	<dname>	JMTech	JUNGMIN TECH.
Checked	<cname>	Title JMT-CCP-BASE	
Approval	<aname>	Size A / Document Number JMT-CCP-BASE / USB	Rev
		Date: Thursday, January 10, 2013	Sheet 7 of 13

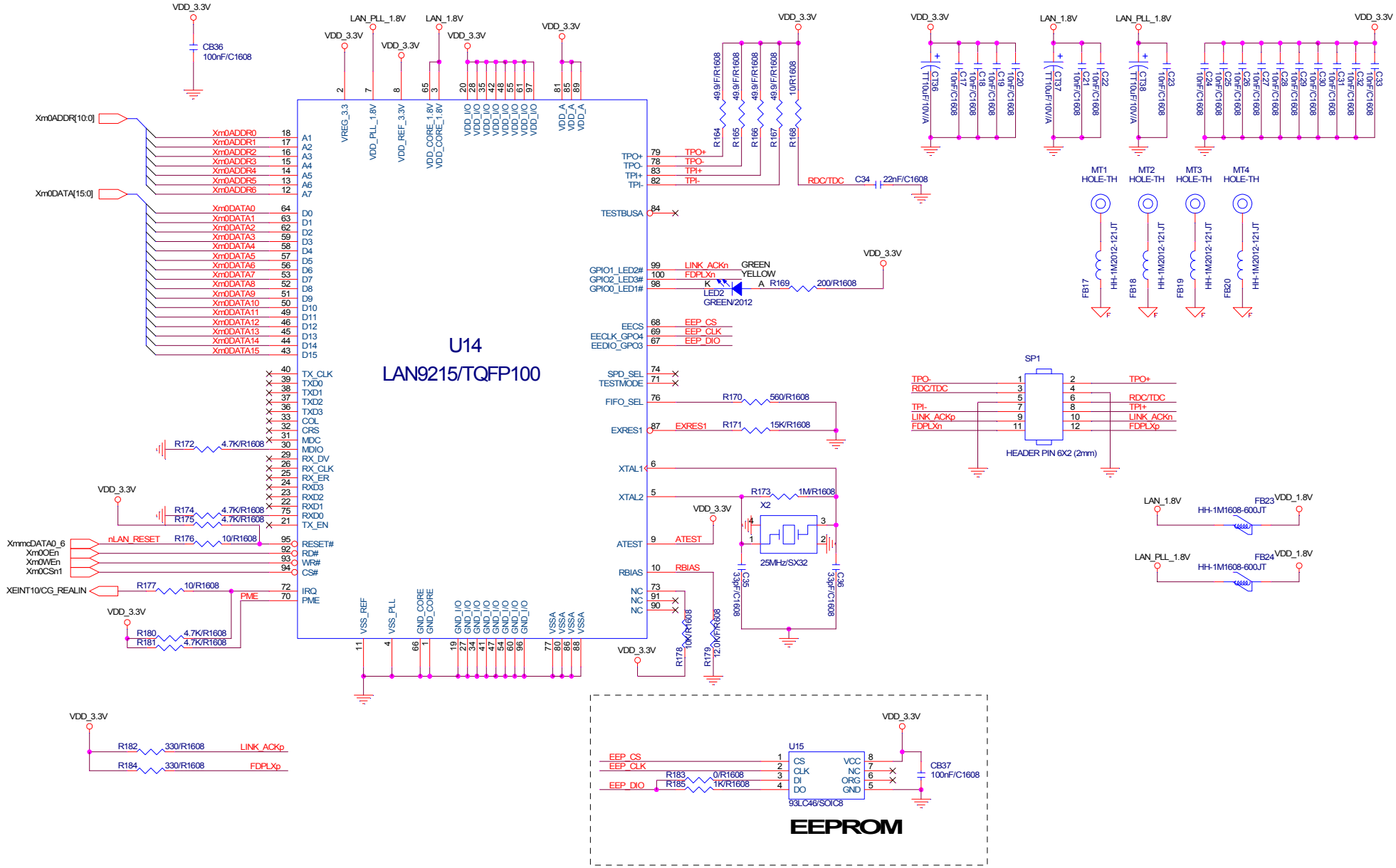

Design	<dname>	JMTech	JUNGMIN TECH.
Checked	<cname>	Title: JMT-CCP-BASE	
Approval	<aname>	Size: A3 / Document Number: JMT-CCP-BASE / LAN	Rev
		Date: Thursday, January 10, 2013	Sheet 8 of 13

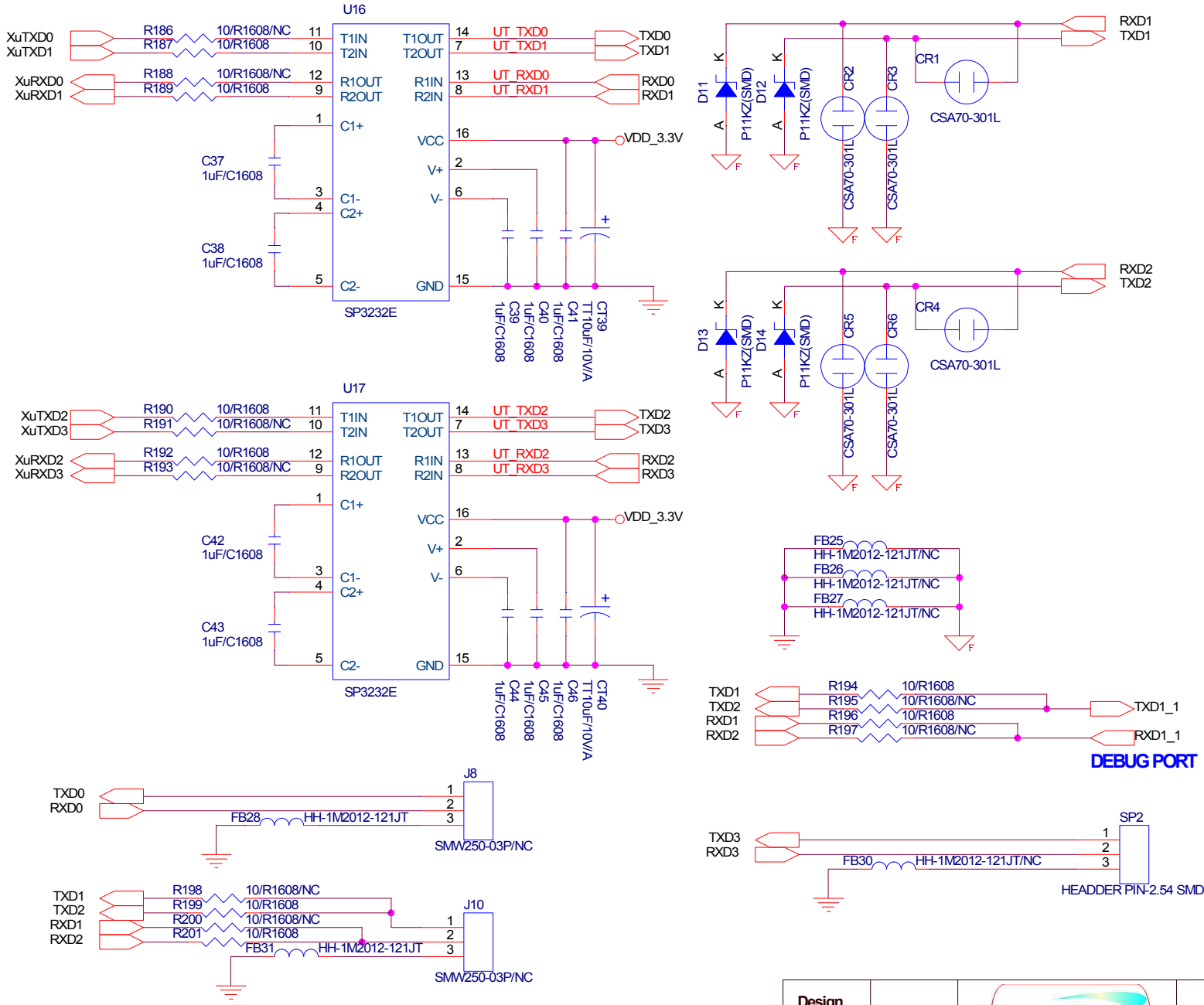

Design	<dname>	JMTech	JUNGMIN TECH.
Checked	<cname>	Title: JMT-CCP-BASE	
Approval	<aname>	Size: A4 / Document Number: JMT-CCP-BASE / UART	Rev
		Date: Thursday, January 10, 2013	Sheet 9 of 13

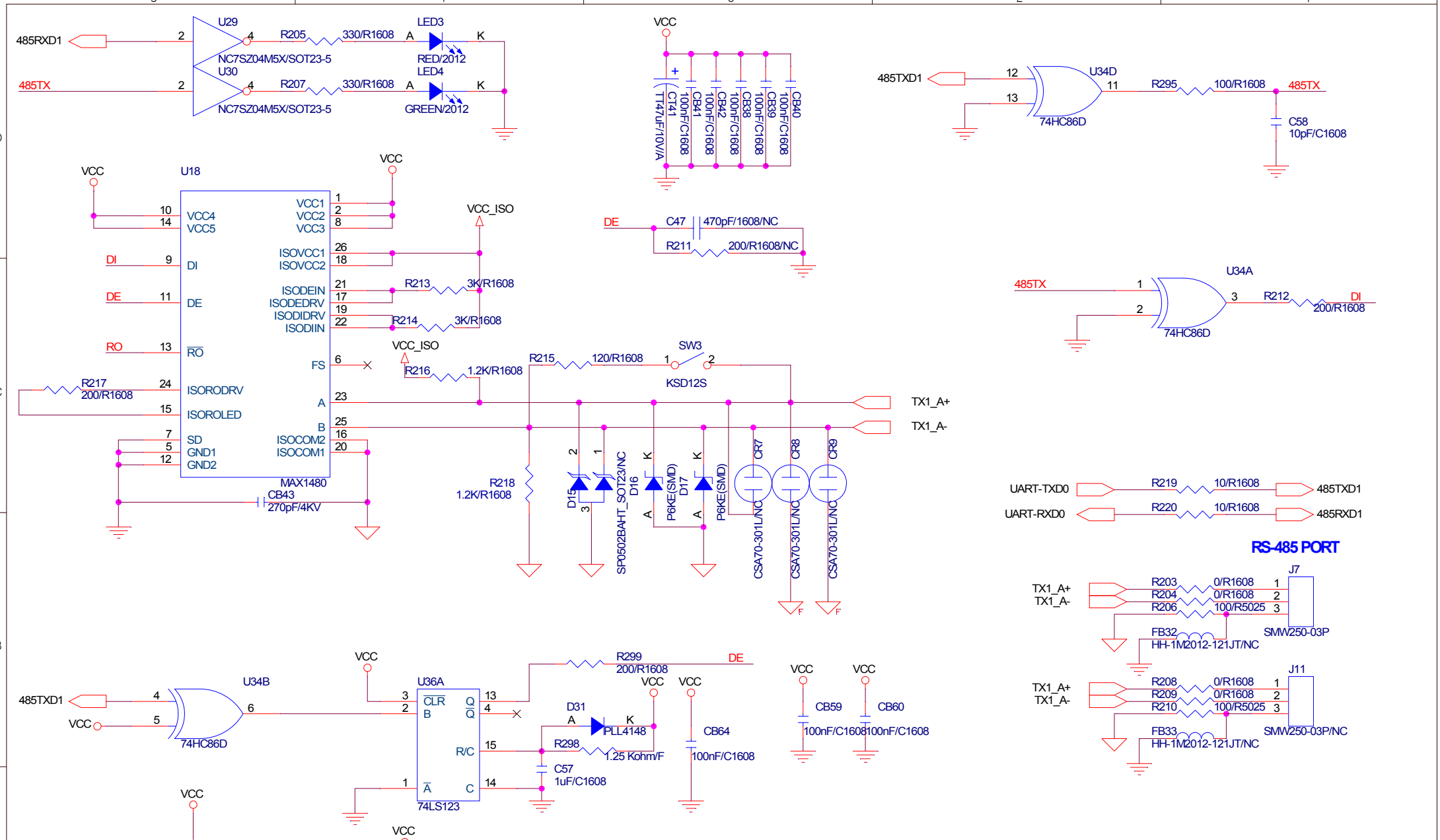

Design	<dname>	JMTech	JUNGMIN TECH.
Checked	<cname>	Title: JMT-CCP-BASE	
Approval	<aname>	Size: A4 / Document Number: JMT-CCP-BASE / UART-485	Rev
		Date: Thursday, January 10, 2013	Sheet 10 of 13

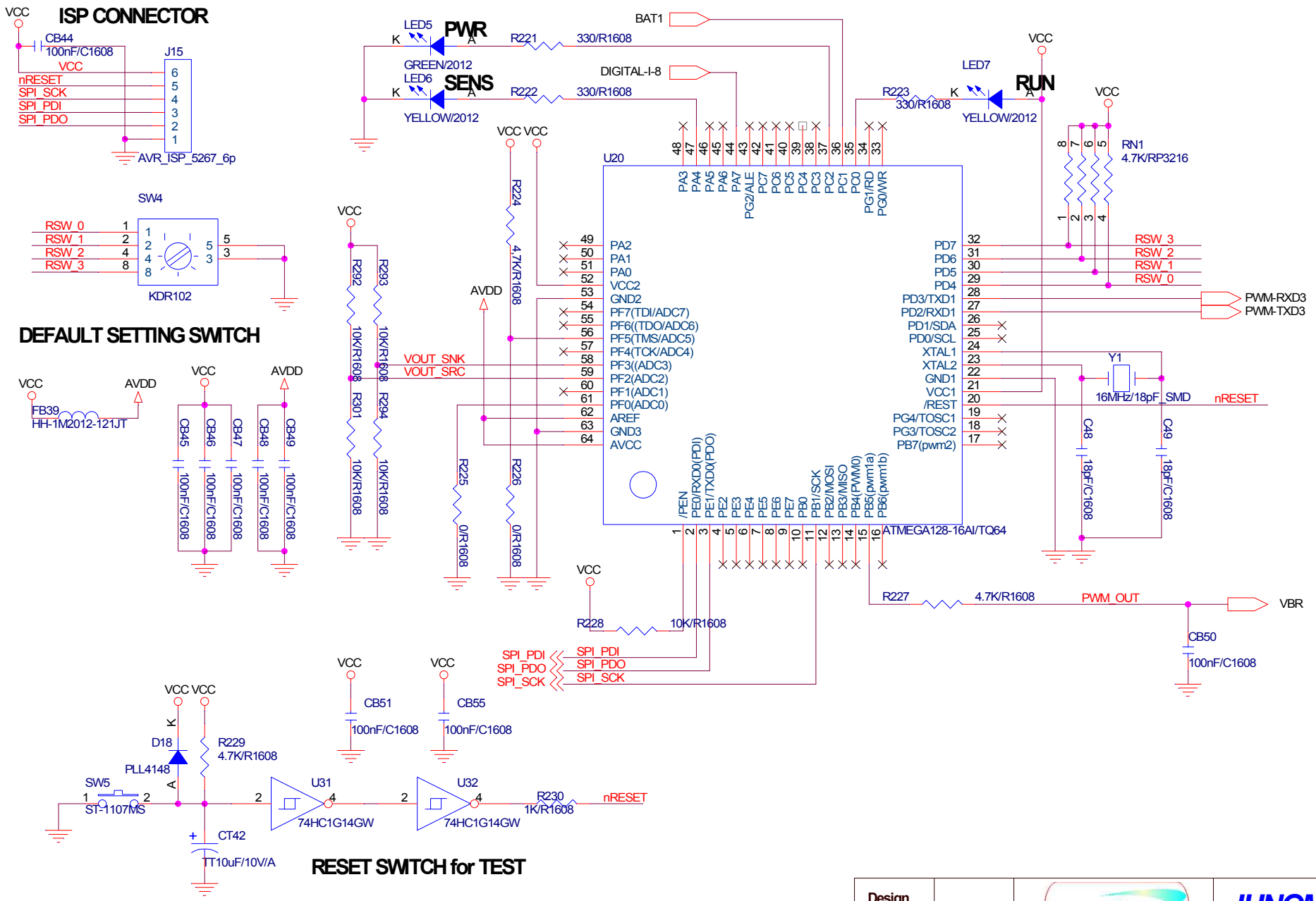

Design	<dname>	JMTech	JUNGMIN TECH.
Checked	<cname>	Title: JMT-CCP-BASE	
Approval	<aname>	Size: A4 / Document Number: JMT-CCP-BASE / ALSB	Rev
		Date: Thursday, January 10, 2013	Sheet 11 of 13

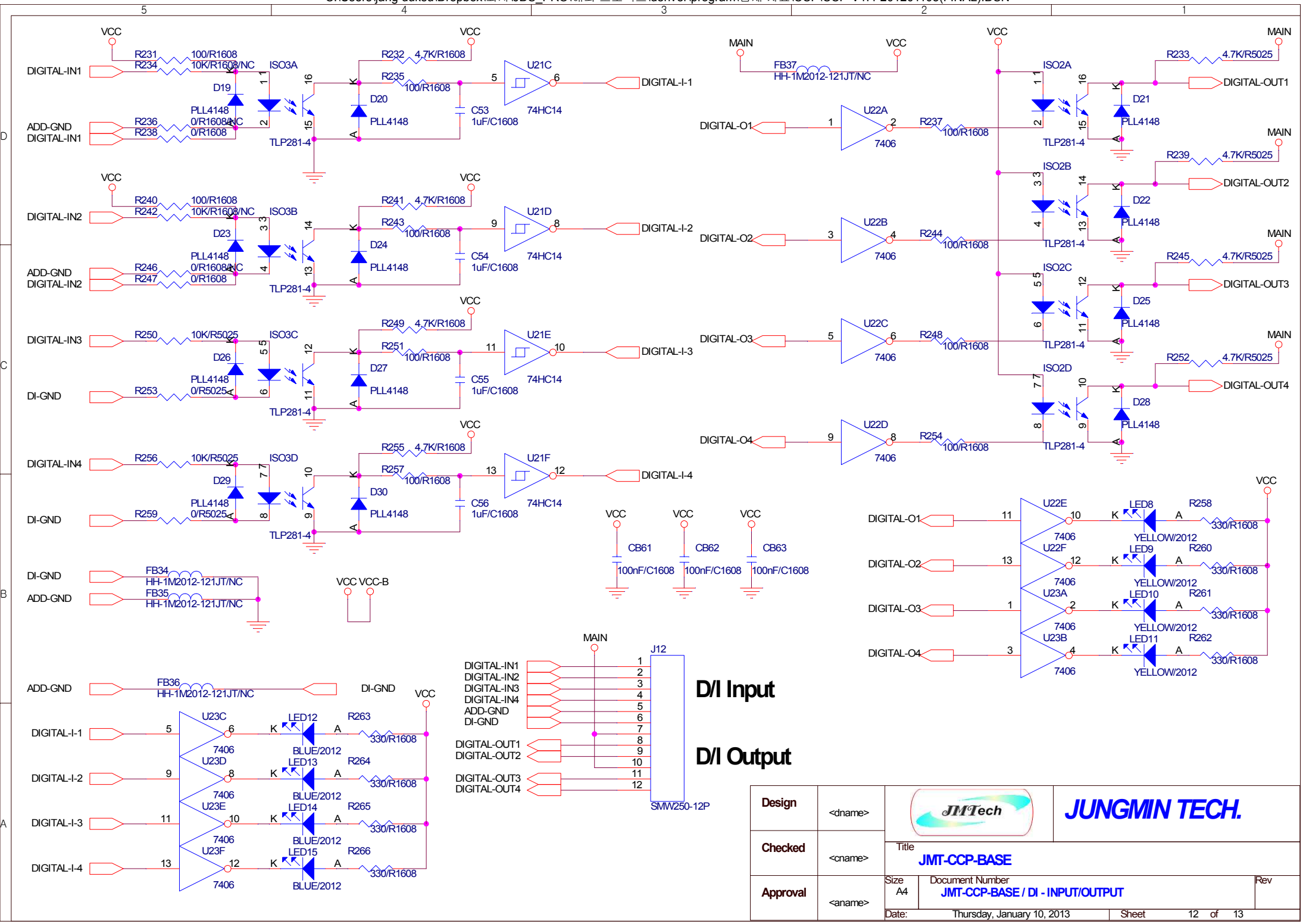

Design	<dname>	JMTech	JUNGMIN TECH.
Checked	<cname>	Title: JMT-CCP-BASE	
Approval	<aname>	Size: A4 / Document Number: JMT-CCP-BASE / DI - INPUT/OUTPUT	Rev
		Date: Thursday, January 10, 2013	Sheet 12 of 13

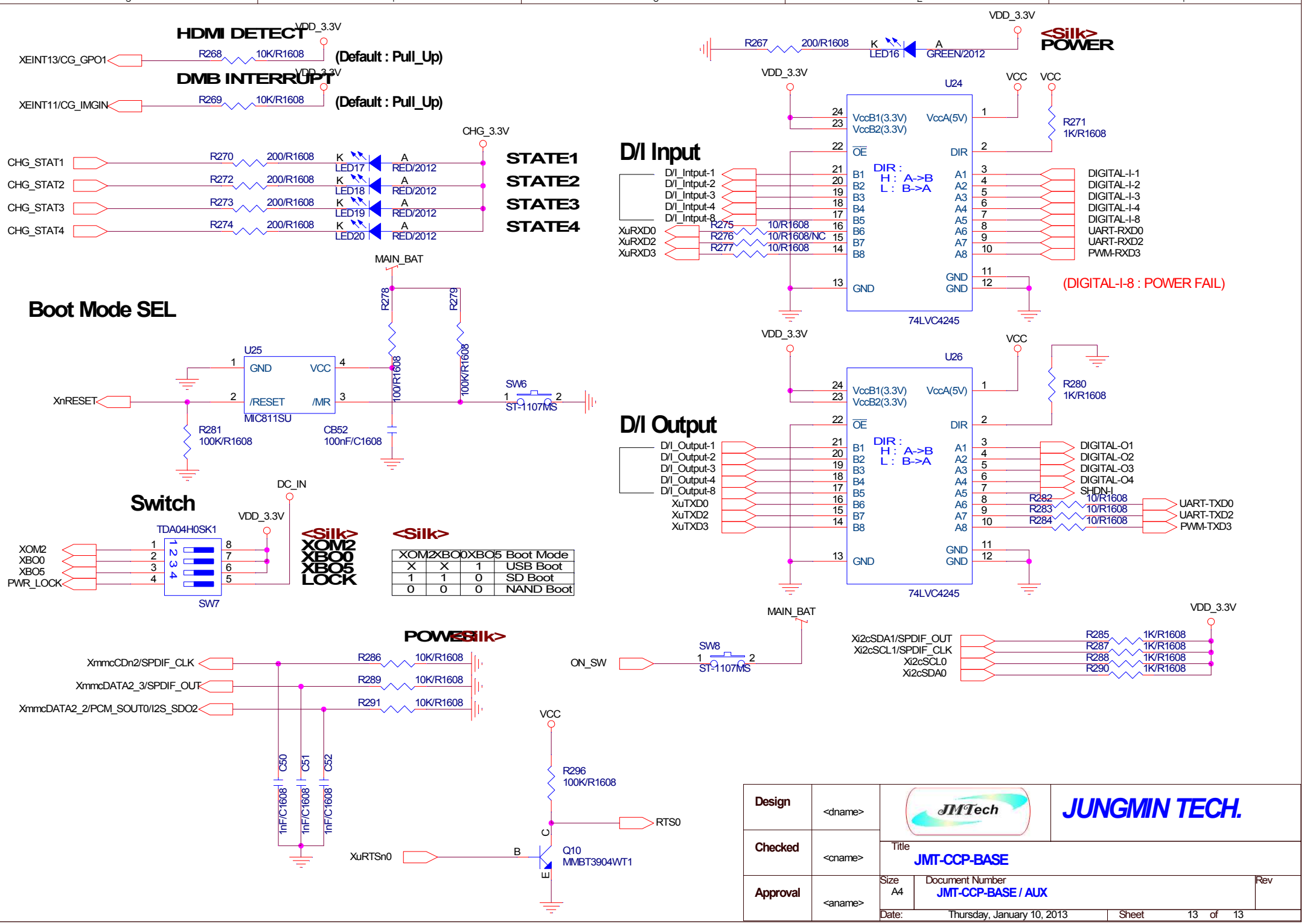
HDMI DETECT
VDD_3.3V
XEINT13/CG_GPO1
R268
10K/R1608
(Default : Pull_Up)
DMB INTERRUPT
VDD_3.3V
XEINT11/CG_IMGIN
R269
10K/R1608
(Default : Pull_Up)
CHG_3.3V
CHG_STAT1
CHG_STAT2
CHG_STAT3
CHG_STAT4
R270 200/R1608 LED17 RED/2012
R272 200/R1608 LED18 RED/2012
R273 200/R1608 LED19 RED/2012
R274 200/R1608 LED20 RED/2012
STATE1
STATE2
STATE3
STATE4
Boot Mode SEL
MAIN_BAT
R278
R279
100/R1608
100K/R1608
U25
GND
VCC
/RESET
/MR
MIC811SU
XnRESET
R281
100K/R1608
CB52
100nF/C1608
SW6
ST-1107MS
Switch
DC_IN
VDD_3.3V
TDA04H0SK1
XOM2
XBO0
XBO5
PWR_LOCK
SW7
<Silk>
XOM2
XBO0
XBO5
LOCK
<Silk>
XOM2 XBO0 XBO5 Boot Mode
X X 1 USB Boot
1 1 0 SD Boot
0 0 0 NAND Boot
POWER
XmmcCDn2/SPDIF_CLK
XmmcDATA2_3/SPDIF_OUT
XmmcDATA2_2/PCM_SOUT0/I2S_SDO2
R286 10K/R1608
R289 10K/R1608
R291 10K/R1608
C50 1nF/C1608
C51 1nF/C1608
C52 1nF/C1608
VCC
R296
100K/R1608
RTS0
XuRTSn0
Q10
MMBT3904WT1
VDD_3.3V
R267 200/R1608
LED16 GREEN/2012
<Silk>
POWER
D/I Input
U24
VccB1(3.3V)
VccB2(3.3V)
VccA(5V)
OE
DIR
DIR :
H : A->B
L : B->A
GND
74LVC4245
VCC
R271
1K/R1608
D/I_Intput-1
D/I_Intput-2
D/I_Intput-3
D/I_Intput-4
D/I_Intput-8
XuRXD0
XuRXD2
XuRXD3
R275 10/R1608
R276 10/R1608/NC
R277 10/R1608
DIGITAL-I-1
DIGITAL-I-2
DIGITAL-I-3
DIGITAL-I-4
DIGITAL-I-8
UART-RXD0
UART-RXD2
PWM-RXD3
(DIGITAL-I-8 : POWER FAIL)
D/I Output
U26
R280
1K/R1608
D/I_Output-1
D/I_Output-2
D/I_Output-3
D/I_Output-4
D/I_Output-8
XuTXD0
XuTXD2
XuTXD3
DIGITAL-O1
DIGITAL-O2
DIGITAL-O3
DIGITAL-O4
SHDN-I
R282 10/R1608
R283 10/R1608
R284 10/R1608
UART-TXD0
UART-TXD2
PWM-TXD3
MAIN_BAT
SW8
ST-1107MS
ON_SW
VDD_3.3V
Xi2cSDA1/SPDIF_OUT
Xi2cSCL1/SPDIF_CLK
Xi2cSCL0
Xi2cSDA0
R285 1K/R1608
R287 1K/R1608
R288 1K/R1608
R290 1K/R1608
Design
<dname>
Checked
<cname>
Approval
<aname>
JMTech
JUNGMIN TECH.
Title
JMT-CCP-BASE
Size
A4
Document Number
JMT-CCP-BASE / AUX
Rev
Date:
Thursday, January 10, 2013
Sheet
13 of 13