NOTE.

1. BOLT TYPE DESCRIPSION

(17) — Item no.

2. EMC TAPE LENGTH DESCRIPTION

(18) -341mm — Length; Item no.

3. Non-assigned connector should be filled with plug & socket pins.

TECHNICAL DATA :

1. SPEAKER
   1) IMPEDANCE : 8ohm ±16%
   2) POWER RATING : 3W (MAX.5W)
   3) SOUND PRESSURE LEVEL : 89dB ± 3dB
   4) RESONANCE FREQUENCY : 240±20%
   5) FREQUENCY RANGE : 0~20,000Hz
2. WEIGHT : 4kg
3. SURFACE TREATMENT
   1) ITEM : NO.1,2,13,16
      - COLOR : BLACK
      - COLOR CODE : UT-721N TOP N-1.5,030
      - MAKER : PPG

NO.	TYPE	SIZE	Q'TY
17-1	FLAT HEAD BOLT	M3XL8	14
17-2	ROUND HEAD BOLT	M3XL8	
	SPRING WASHER	M3X_6Xt0.8	12
	FLAT WASHER	M3X06.5Xt0.5	
17-3	NUT	M4	4
	SPRING WASHER	M4X06.8Xt1.0	
	FLAT WASHER	M4X07.0Xt0.8	

X2: PIN ASSIGNMENT [ITH06F18-19S30F6]

NO.	ITEM
A	PA1+(in)
B	PA1-(in)
C	PA1 SH(in)
D	
E	
F	
G	
H	G ICC SH
J	G ICC+
K	G ICC-

X1: PIN ASSIGNMENT [ITH03FPA28-21PB0G1F6]

NO.	ITEM	NO.	ITEM
A	POWER1-VCC	a	CCC RX+
B	POWER1-GND	b	CCC RX-
C	LINE	c	CCC SH
D	LINE ADD GND(in)	d	CCC TX+
E		e	CCC TX-
F		f	G-SH+
G		g	MUTE+
H		h	MUTE-
J		j	G-SH-
K		k	PBH+
L	PE1 RX+(in)	a	PBH-
M	PE1 RX-(in)	n	PBH SH
N	PE1 SH (in)	p	
P	PE1 TX+(in)	P	POWER VCC(DPH)
R	PE1 TX-(in)	e	POWER GND(DPH)
S			
T			
U			
V	DUAL TONE+(in)		
W	DUAL TONE-(in)		
X	DUAL TONE SH(in)		
Z			

ITEM	DESCRIPTION	SPEC	DWG NO.	REMARKS
1	FRONT PANEL	SGH60p+LG	R3D0000073	PAINTING
2	DPO FRAME	ABS+CO, H.G	R3D0000069	PAINTING
3	SPEAKER	4W8W8-KC3H5-8016p,8ohm,3W	R3D0000074	
4	VOLUME CONTROL	RV30YN1-B5F-B103KT10DCS	R3D0001110	
8	ILLUMINATED SWITCHES	AV6R1.D8-4M0000PBRM	R3D0000062	
6	DPO CONTROL BOARD	ABSY,W8	R3D0000072	
7	POWER CONVERTER BOARD	Vicor,W8	R3D0000070	
8	CONNECTOR,X1	TTH03FPA-21S0000PBRL,ERAIR		
9	CONNECTOR,X2	TTH06F18-19S30F6PBRL,ERAIR		
10	CONNECTOR,X3	TTH03FPA-4S0000PBRL,ERAIR		
11	CONNECTOR,X8	TTH03FPA-3S0000PBRL,ERAIR		
12	WIRE MESH	SS400,SCR420H,0.8t, 45.3	R3D0000069	- 01
13	UPPER COVER	ABS+CO, H.G	R3D0000070	
14	NAME PLATE	AL,t=1	R3D0000082	- 03
15	HANDMIC	KMC-30W20WCCCD	R3D0000081	
16	REAR COVER	ABS+CI, H.G	R3D0000070	PAINTING
17	BOLT & NUT LIST	ABSY		
19	EMC TAPE	6F8000NR-C-NO-A, 5.0mm		
20	RUBBER GROMMET	EPDM, 4t(inner)(0.70 inch)	R3D0000091	
20	SHEET	SS400,t=0.7	R3D0000085	- 09
21	RUBBER SHEET	RUBBER	R3D0000077	
22	GROMMIT BRACKET	ABS+CI,t=1.0	R3D0000083	PAINTING
23	DPO PARING DIAGRAM	ABSY	R3D0000089	
24	RUBBER GROMMET	EPDM, 4t(inner)(0.50inch)	R3D0000087	
25	CONNECTOR	RS3-RSF		
26	CONNECTOR	RS3-PSRM		

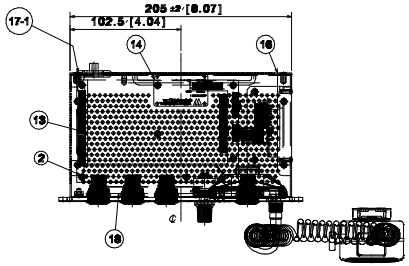

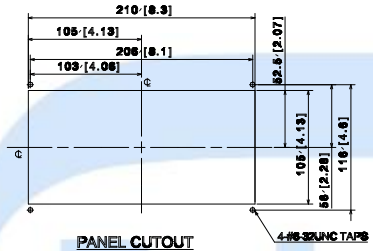

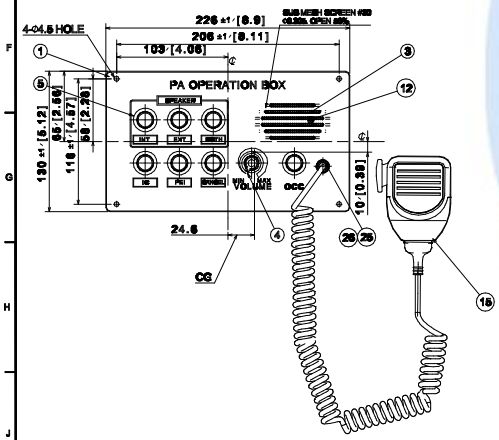

PANEL CUTOUT

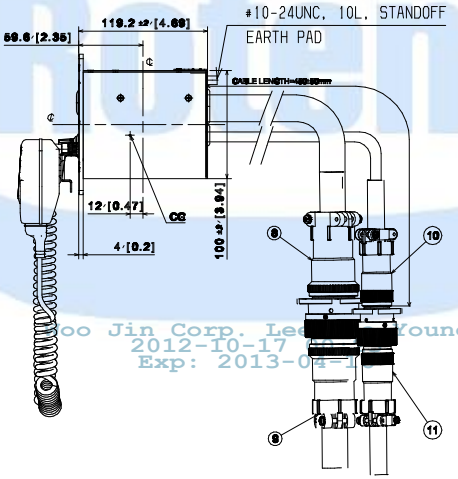

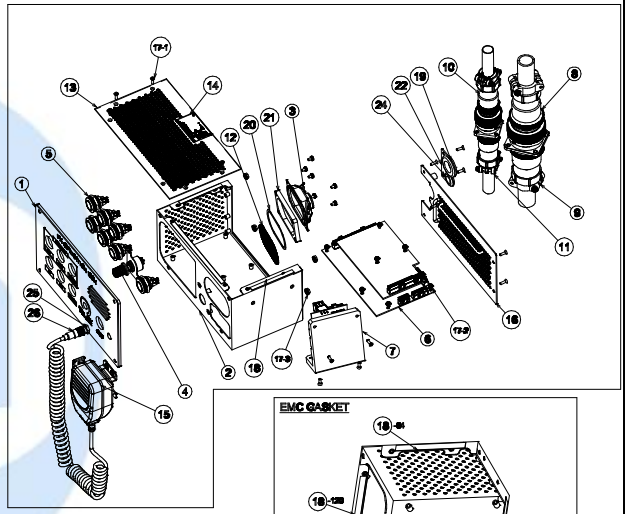

EMC GASKET

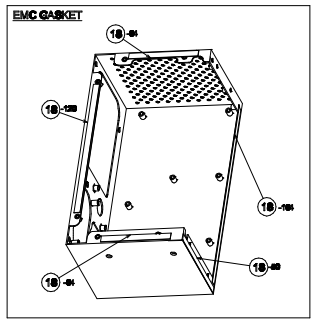

품번 NO.	부품 번호 PART NO.	품 명 DESCRIPTION	재 질 MATERIAL	수량 Q'TY	중량 W.T	비 고 REMARKS
승인 APP	S.H.PARK 2011.03.25	재질 MAT'L ASSY				
검도 CHK	C.Y.LEE 2011.03.17	총중량 G.W 9.3 lbs				
설계 DGN	Y.S.JEON 2011.03.11	일반공차 MC WD CT				
제도 DRG		B				
		SIZE C				

MARK	일 자 DATE	변 경 내 역 DETAIL OF REVISION(E.C ZONE)	설변번호 E.C NO.	설계 DGN	검도 CHK	승인 APP
Ex1	2012.03.15	The supplier revised the drawing.	RNE1002-U090	Y.S.JEON	C.Y.LEE	S.H.PARK
Dx1	2012.01.05	The supplier revised painting spec.		Y.S.JEON	C.Y.LEE	S.H.PARK
Cx1	2011.11.25	The figure was changed for interference		Y.S.JEON	C.Y.LEE	S.H.PARK
Bx1	2011.10.25	The supplier revised the drawing for FDR		Y.S.JEON	C.Y.LEE	S.H.PARK
Ax1	2011.08.10	The MIC jack was changed by CUSTOMER		Y.S.JEON	C.Y.LEE	S.H.PARK

참조번호 REF. NO.

명 칭 TITLE: DRIVER PA OPERATION BOX

도면 번호 DRG. NO: RES14001CT0 — Ver. 00 — Rev. -E — RNE1002

SCALE N/S — 매수 SHEET 1 of 1

HYUNDAI Rotem 현대로템주식회사

DENVER RTD FASTRACKS — DRIVER PA OPERATING BOX — R1D1473-25854 — A

DIM. IN mm — REC SCALE 1/1 — DATE 2011.07.19 — DRAWN S.H.KANG — CHECKED J.Y.LEE — APPROVED B.J.JONE

WOOJIN

Rotem 270430 2012-10-16 10:19

Woo Jin Corp. Lee Young 2012-10-17 Exp: 2013-04-1

본 도면은 당사 재산으로서 허가없이 무단복사/배포 금지함. PROPERTY OF ISSUING ENTITY. CANNOT BE DISTRIBUTED OR REPRODUCED WITHOUT AUTHORIZATION.

CATIA