TECHNICAL DATA :

1. INPUT VOLTAGE : AC 230V
2. CURRENT CONSUMPTION : 1A
3. INTERFACE : CML DIGITAL VIDEO SIGNAL
4. COLOR FRONT FRAME : EX4505(S)-TX-WH001 (WHITE)
5. DISPLAY : LTM190BT03, SAMSUNG
6. NUMBER OF PIXELS : 1,440x900
7. ACTIVE AREA : 408.2mm[16"]x255.2mm[10"]
8. COLORS : 16.7M
9. BRIGHTNESS : 300cd/□
10. CONTRAST RATIO : 1,000:1
11. WEIGHT : 19.5kg
8

12. SURFACE TREATMENT
1) ITEM : NO.1,2
- COLOR : GRAY
- COLOR CODE : PANTONE COOL GRAY 1C
- MAKER : CHOKWANG
2) ITEM : NO. 4,22
- S/TREATMENT : Zn PLATING

NOTE.

1. BOLT TYPE DESCRIPTION

25
└ ITEM NO.

2. NON-ASSIGNED CONNECTOR SOCKETS/PINS SHOULD BE FILLED WITH SEALING PLUG. (SEALING PLUG : 10-305045-16, GLENAIR)

NO.	TYPE	SIZE	Q'TY
25-1	ROUND HEAD BOLT	M3xL6	29
	SPRING WASHER	M3x05x0.8	29
	FLAT WASHER	M3x05.8x0.5	29
25-2	ROUND HEAD BOLT	M3xL12	12
	SPRING WASHER	M3x05x0.8	12
	FLAT WASHER	M3x05.8x0.5	12
25-3	FAN HEAD SCREW	M4xL6	6
	SPRING WASHER	M4x06.8x1.0	6
	FLAT WASHER	M4x07.8x0.8	6
25-4	FLAT WASHER	M4xL8	10
	SPRING WASHER	M4x06.8x1.0	10
	FLAT WASHER	M4x07.8x0.8	10

조립 GROUP NO.	품번 ITEM	품명 DESCRIPTION	사양 SPEC	도번번호 DWG NO.	-	원번	중량. 길이 폭 x 높이	표면처리 S/TREATMENT
1	1	MAIN FRAME	A366-91, t1.2	R1C000049				PAINTING
1	2	COVER	A366-91, t1.2	R1D000339				PAINTING
1	3	LCD PROTECTIVE COVER	POLYCARBONATE, t2.0	R1D000341				
1	4	LCD INVERTER BRACKET	A366-91, t1	R1C000039				Zn PLATING
1	5	TFT LCD PANEL	LTM190BT03, SAMSUNG					
1	6	LCD INVERTER	GH317A, SAMSUNG					
1	7	VIDEO RX BOARD	PID-RXB, W/S	R1D000338				
1	8	POWER CONVERTER BOARD	PID-PCB, W/S	R1D000337				
1	9	WIRING HARNESS	PID1-WH, W/S					
1	10	CONNECTOR (X1)	FRIT8410SR168-1P80G1F6/GLENAIR					
1	11	CONNECTOR (X1)	FRIT8410SF168-1680F6/GLENAIR					
1	12	CONNECTOR (X2)	UTG01412P/FCI					
1	13	CONNECTOR(X2)	UTG014128/FCI					
2	14	STUD RECEPTACLE SUP N	D8-318-218-190 D8-328-101-200 , SOUTHCO					
2	15	SPRING (M4 OPA HEAD EMBELISHR)	D4-E1F8-3-8600A D8-375-001-049 , SOUTHCO					
2	16	CLIP WASHER (LIFTOR SPRING STAINLESS)	D8-375-001-049 D4-E1F8-3-8600-0A- , SOUTHCO					
2	17	RETAINER (M4 RIVIT PLATE RECEPT)	D8-328-101-200 D8-338-400-190 , SOUTHCO					
2	18	RECEPTACLE (TAMPER RESISTANT)	D8-338-400-121 D8-318-223-190 , SOUTHCO					
1	19	NAME PLATE	AL,t=1	R1D000452	-	06		
1	20	FIXED WIRE	WIRE	R1D000461	-	02		
2	21	TIE-MOUNT	JOTM-388, JEONG ELECTRIC					
1	22	LCD BRACKET	A366-91, t1	R1C000037				Zn PLATING
2	23	DUST COVER	-					
2	24	WIRE BRACKET	A366-91, t2	R1D000461	-	01		
1	25	BOLT & WASHER LIST	ASSY					
2	26	CONNECTOR(X3,X4)	SCP-C7FA, CANARE					
1	27	PID1 WIRING DIAGRAM	ASSY	R1D000442				

X1 : PIN ASSIGNMENT
[FRIT8410ZR168-1P80G1F6]

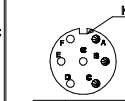

NO.	ITEM
A	TX1+(m)
B	TX1-(m)
C	TX1 SH(m)
D	
E	
F	
G	

X2 : PIN ASSIGNMENT
[UTG014128]

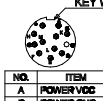

NO.	ITEM
A	POWER VCC
B	POWER GND
C	
D	ADD2
E	ADD3
F	ADD4
G	ADD5
H	ADD6
J	ADD7
K	ADD8
L	ADD9
M	ADD GND

X3 : BNC CONNECTOR

PIN NO.	REMARK
CENTER	VIDEO OUT
SHIELD	GND

X4 : BNC CONNECTOR

PIN NO.	REMARK
CENTER	VIDEO IN
SHIELD	GND

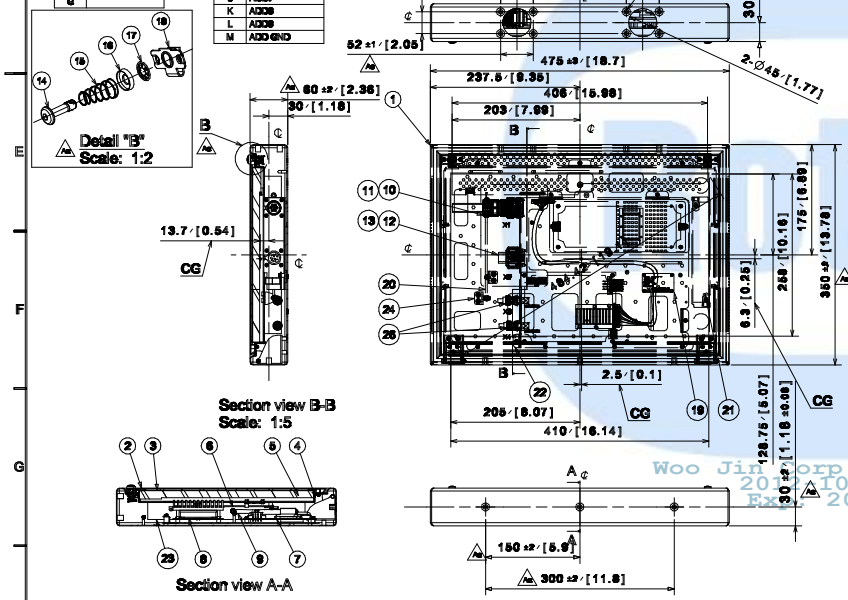

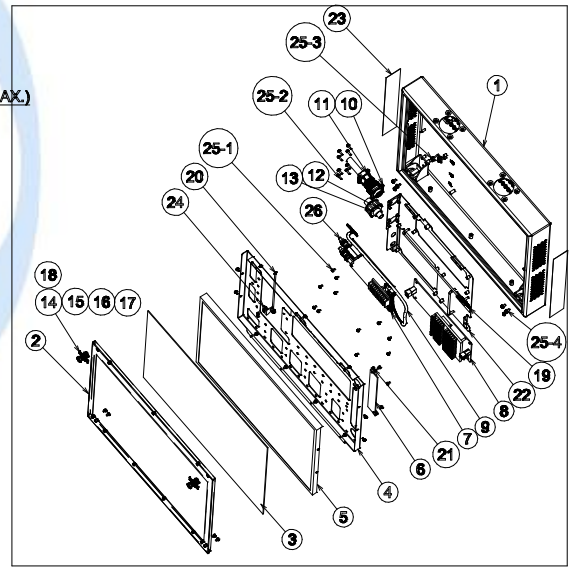

품번 NO.	부품 번호 PART NO.	품 명 DESCRIPTION	재 질 MATERIAL	수량 Q'TY	중량 W.T	비 고 REMARKS

승인 APP	S.H.PARK 2011.03.25	재질 MAT'L ASSY	명 칭 TITLE	LCD PASSENGER INFORMATION DISPLAY-1
검도 CHK	C.Y.LEE 2011.03.17	총중량 G.W 18.6 lbs		
설계 DGN	Y.S.JEON 2011.03.11	일반공차 MC WD CT	도번 번호 DRG. NO	RES25002CT0
제도 DRG		B	MS	Ver. 00 / Rev. -D
		SIZE C	SCALE N/S	매수 SHEET 1 of 1

기호 MARK	일자 DATE	변경내역 DETAIL OF REVISION(E.C ZONE)	설변번호 E.C NO.	설계 DGN	검도 CHK	승인 APP
Dx1	2012.03.15	The supplier revised the weight and Dim.	RNE1002-U090	Y.S.JEON	C.Y.LEE	S.H.PARK
Cx1	2012.01.05	The supplier revised the painting Spec.		Y.S.JEON	C.Y.LEE	S.H.PARK
Bx1	2011.10.25	The supplier revised the drawing for FDR		Y.S.JEON	C.Y.LEE	S.H.PARK
Ax1	2011.05.12	The supplier changed the location of PCB.		Y.S.JEON	C.Y.LEE	S.H.PARK

참변번호 REF. NO.

HYUNDAI Rotem 현대로템주식회사

DENVER RTD FASTRACKS

LCD PASSENGER INF. DISPLAY-1

R1D1473-25851 A3

WOOJIN Industrial Systems Co.,Ltd.

DIM. IN mm | 작성일 DATE 2011.09.29 | 승인 APPROVED | 척도 SCALE 1 / 5 | 작성 DRAWN B.H.KANG | 제도 DESIGNED - | 검토 CHECKED J.Y.LEE | B.J.JONE

설계MEMO

GENERAL TOLERANCE (KS B 0405)

마감 FINISH

표면처리 S/TREATMENT

개정 CHANGE

두께 THICKNESS			
~ 40	2	4
~ 30	2	3
~ 10	1	1.5
< 3	0.5	1

길이 LENGTH		
~3150	-	7
~1600	4	5
~ 800	3	4
~ 400	2	3
~ 200	1.5	2
~ 100	1	1.5

등급 GRADE	A	B
주철, 주강품 CASTING (±)		
~ 20M	8	14
~ 15M	7	12
~ 12M	6	10
~ 8M	5	8
~ 4M	4	6
~ 2M	3	4
~ 1M	2	3
~ 315	1	2
~ 120	1	2
~ 30	1	1

등급 GRADE	A	B	C
용접 구조물 WELDING (±)			
~ 20M	-	6.0	8.0
~ 15M	-	5.0	7.0
~ 12M	-	4.0	6.0
~ 8M	-	3.0	5.0
~ 4M	0.8	2.0	4.0
~ 2M	0.5	1.2	3.0
~ 1M	0.3	0.8	2.0
~ 315	0.2	0.5	1.2
~ 120	0.15	0.3	0.8
~ 30	0.1	0.2	0.5
3~6	0.05	0.1	0.2

등급 GRADE	A	B	C
기계 가공품 MACHINING (±)			
~ 20M	-	6.0	8.0
~ 15M	-	5.0	7.0
~ 12M	-	4.0	6.0
~ 8M	-	3.0	5.0
~ 4M	0.8	2.0	4.0
~ 2M	0.5	1.2	3.0
~ 1M	0.3	0.8	2.0
~ 315	0.2	0.5	1.2
~ 120	0.15	0.3	0.8
~ 30	0.1	0.2	0.5
3~6	0.05	0.1	0.2

등급 GRADE	A	B	C
규정치않은 일반공차 GENERAL TOLERANCE			

Woo Jin Corp. Lee Jae Young
2011-10-17 00:21
Exp: 2013-04-16

Rotem 270430 2012-10-16 10:19

본 도면은 당사 재산으로서 허가없이 무단복사/배포 금지됨. PROPERTY OF ISSUING ENTITY. CANNOT BE DISTRIBUTED OR REPRODUCED WITHOUT AUTHORIZATION.

본-PRJT

정리번호

CATIA