LED MODULE DATA

1. TYPE: CHIP TYPE LED DOT MATRIX TYPE
2. ACTIVE DISPLAY SIZE : 64mmH x 128mmW
3. NUMBER OF DOT : 16x32 Dots (512 Dots)
4. DISPLAY COLOR : AMBER COLORS
5. SIZE : 0.9mm
6. DOT PITCH : 4mm
7. DUTY RATE : 1/16 DUTY DYNAMIC
8. WEIGHT : 160g (TYP)

NOTE

1. WEIGHT : 8.5 kg
2. BOLT TYPE DESCRIPTION
   (21) — ITEM NO.
3. EMC TAPE LENGHTH DESCRIPTION
   (20) -3H1mm
   LENGTH
   ITEM NO.
4. NON-ASSIGNED CONNECTOR SHOULD BE FILLED WITH PLUG & SOCKET PINS.
5. SURFACE TREATMENT
   1) ITEM : NO. 2,4
      - COLOR : BLACK
      - COLOR CODE : UT-721N TOP N-1.5,@20
      - MAKER : PPG
   2) ITEM : NO. 3
      - S/TREATMENT : Zn PLATING
   3) ITEM : NO. 1
      - S/TREATMENT : HAIRLINE #180

TECHNICAL DATA

1. INPUT VOLTAGE : 37.5VDC (24 - 48VDC)
2. CURRENT CONSUMPTION TYP.:
   4A / 50% ACTIVE, MEDIUM INTENSITY
3. CURRENT CONSUMPTION max. : 14 A
4. INTERFACE : RS-485
5. COLOR OF HOUSING : BLACK, POWDER COATED
6. COLOR OF LED : ORANGE

NO.	TYPE	SIZE	QTY
21-1	ROUND HEAD BOLT	M3x0.5	16
	SPRING WASHER	M3x0.5x0.8	16
	FLAT WASHER	M3x0.5x0.5	16
21-2	ROUND HEAD BOLT	M3x0.5	80
	SPRING WASHER	M3x0.5x0.8	80
	FLAT WASHER	M3x0.5x0.5	80
21-3	ROUND HEAD BOLT	M4x0.9	24
	SPRING WASHER	M4x0.9x1.0	24
	FLAT WASHER	M4x0.7.9x0.8	24
21-4	FLAT HEAD BOLT	M3x0.5	2
21-5	SPRING WASHER	M4x0.9x1.0	8
	FLAT WASHER	M4x0.7.9x0.8	8
	NUT	M4	8

DWG SHEET NO.	ITEM	품명 DESCRIPTION	재질 SPEC	도번 DRAWING NO.	수량 Q'TY	중량 W.T	표면처리 FINISH
	1	FRONT PANEL	SS400, t9	R1D2003047			HAIRLINE#180
	2	FRAME	ABS-CO, t1.5	R1D2003048			PAINTING
	3	LED BRACKET	ABS-H, t1.5	R1D2003053			Zn PLATING
	4	COVER	ABS-CO, t1.5	R1D2003058			PAINTING
	5	LED ELEMENT ARRAY MODULE	OOTLM-064DY-16SH, CO-TECH	R1D2003049			
	6	LED CONTROL BOARD	PCB, WB	R1D2003054			
	7	POWER CONVERTER (VICOR)	VICOR, WB	R1D2003050			
	8	CONNECTOR	[illegible]				
	9	CONNECTOR	[illegible]				
	10	RUBBER GROMET	EPDM, [illegible]				
	11	GROMET BRACKET	ABS-H, t1.5	R1D2003057			
	12	NAME PLATE	AL,t1	R1D2003052	1	65	
	13	PHILLIPS-RIVOSS	[illegible]				
	14	RECEPTACLE SLIP ON	[illegible]				
	15	RECEPTACLE SLIP N	[illegible]				
	16	SUS CPU HEAD SUS[illegible]	[illegible]				
	17	SUS[illegible] SPRING STAINLESS	[illegible]				
	18	BRACKET	ABS, t2.0	R1D2003051			
	19	RUBBER TUBE	[illegible]				
	20	EMC TAPE	[illegible]				
	21	BOLT & WASHER LIST	ABSY				
	22	HINGE	[illegible]	R1D2003055			
	23	LED PROTECTIVE COVER	[illegible]	R1D2003059			
	24	STICKER	VINL	R1D2003062			
	25	PE WORKS [illegible]	ABSY	R1D2003063			

SAMPLE OF LDM DISPLAY

X1: CONNECTOR PIN ASSIGMENT
(TTHDBF22-14S50F6)

NO.	ITEM
A	POWER VCC
B	
C	POWER GND
D	
E	TX1 +(in)
F	TX1 -(in)
G	TX1 SH(in)
H	
J	
K	
L	
M	
N	
P	
R	ADD 1
S	ADD 2
T	ADD 3
U	ADD 4
V	ADD GND

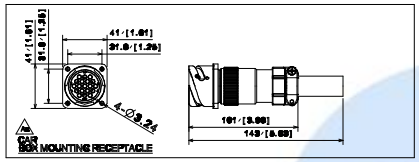

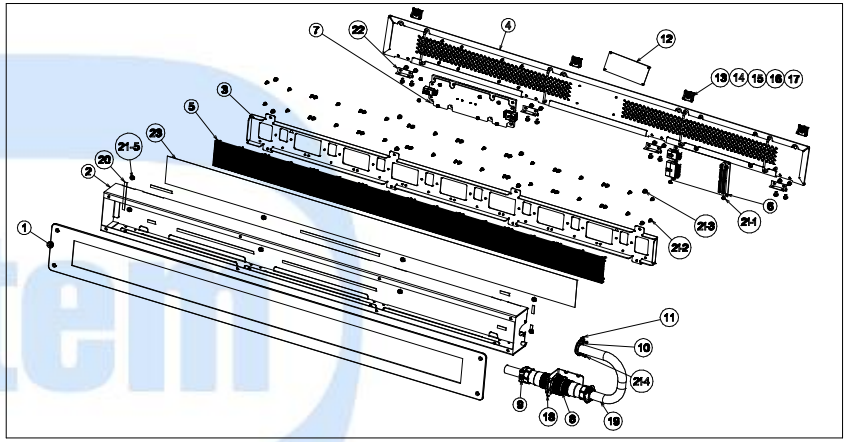

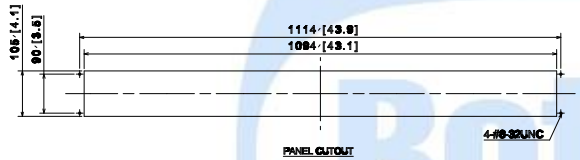

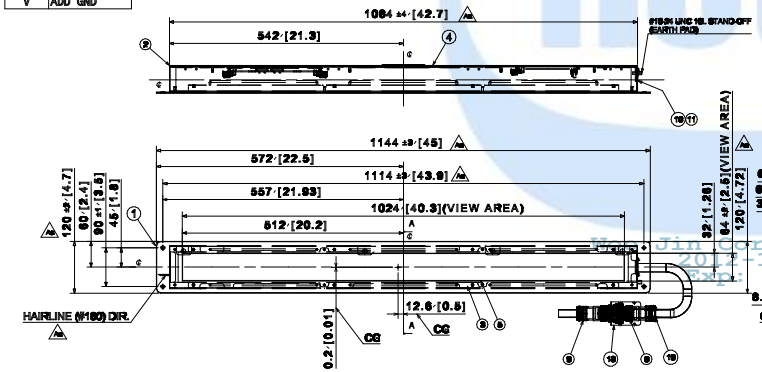

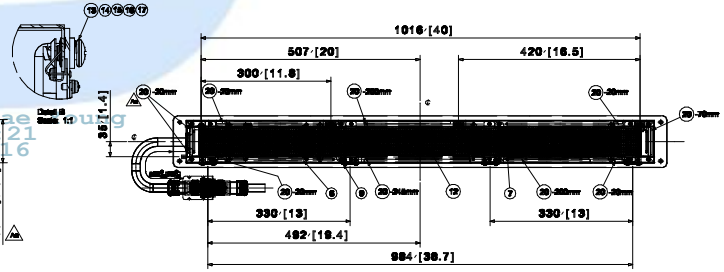

품번 NO.	부품 번호 PART NO.	품 명 DESCRIPTION	재 질 MATERIAL	수량 Q'TY	중량 W.T	비 고 REMARKS

Cx1	2012.03.15	The supplier revisd the weight and Dim.	RNE1002-U090	Y.S.JEON	C.Y.LEE	S.H.PARK
Bx1	2012.01.05	The supplier revisd the painting Spec.		Y.S.JEON	C.Y.LEE	S.H.PARK
Ax1	2011.10.25	The supplier revisd the drawing for FDR		Y.S.JEON	C.Y.LEE	S.H.PARK
기 호 MARK	일 자 DATE	변 경 내 역 DETAIL OF REVISION(E.C ZONE)	설변번호 E.C NO.	설계 DGN	검도 CHK	승인 APP

승인 APP	S.H.PARK 2011.03.25	재질 MAT'L ASSY	명 칭 TITLE: PASSENGER INFORMATION INDICATOR
검도 CHK	C.Y.LEE 2011.03.17	총중량 G.W 18.1 lbs	
설계 DGN	Y.S.JEON 2011.03.11	일반공차 MC WD CT	도면 번호 DRG. NO: RES25001CT0 Ver. 00 Rev. -C RNE1002
제도 DRG		B / SIZE C	SCALE N/S 매수 SHEET 1 of 1

HYUNDAI Rotem 현대로템주식회사

DENVER RTD FASTRACKS
LED PASSENGER INFORMATION INDICATOR
R1D1473-25853
DIM. IN mm | 2011.10.07 | B.J.JONE
1 / 5 | B.H.KANG | -
CAD DRAWN | CAD CHECKED | APPROVED

일반공차 GENERAL TOLERANCE	기계 가공품 MACHINING (±)	용접 구조물 WELDING (±)
0 ~ 3	0.1	1.0
3 ~ 6	0.05	0.1
~ 30	0.1	0.2
~ 120	0.15	0.3
~ 315	0.2	0.5
~ 1000	0.3	0.8
~ 2000	0.5	1.2
~ 4000	0.8	2.0
~ 8000	-	3.0
~ 12000	-	4.0
~ 16000	-	5.0
~ 20000	-	6.0
등급 GRADE	A	B
주조품 CASTING (±)		
~ 20M	8	14
~ 15M	7	12
~ 12M	6	10
~ 8M	5	8
~ 4M	4	6
~ 2M	3	4
~ 1M	2	3
~ 315	1	2
~ 120	1	2
~ 30	1	1
등급 GRADE	A	B
용접 구조물 WELDING (±)		
~ 20M	-	6.0
~ 15M	-	5.0
~ 12M	-	4.0
~ 8M	-	3.0
~ 4M	0.8	2.0
~ 2M	0.5	1.2
~ 1M	0.3	0.8
~ 315	0.2	0.5
~ 120	0.15	0.3
~ 30	0.1	0.2
3 ~ 6	0.05	0.1
등급 GRADE	A	B

Rotem 270430 2012-10-16 10:19
Hyojin Corp / Lee Jae Hung 2012-10-16 10:21 Exp. 2014-4-16
본 도면은 당사 재산으로서 허가없이 무단복사/배포 금지됨. PROPERTY OF ISSUING ENTITY. CANNOT BE DISTRIBUTED OR REPRODUCED WITHOUT AUTHORIZATION.