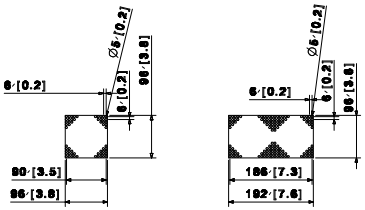

SAMPLE OF LDN DISPLAY

LED MODULE DATA
1. TYPE: Lamp Type LED Dot MAtrix Type
2. ACTIVE DISPLAY SIZE : 96mmH x 96mmW
3. NUMBER OF DOT : 16x16 Dots (256 Dots)
4. DISPLAY COLOR : AMBER / RGB Colors
5. SIZE : Ø 5mm
6. DOT PITCH : 6mm
7. DUTY RATE : 1/16 Duty Dynamic
8. WEIGHT : 160g (Typ)

NOTE
1. WEIGHT : 10.5 kg
2. BOLT TYPE DESCRIPTION
(21) — Item no.
3. EMC TAPE LENGTH DESCRIPTION
(19) 341mm — LENGTH — Item no.
4. Non-assigned connector should be filled with plug & socket pins.

TECHNICAL DATA
1. INPUT VOLTAGE : AC230V (AC180V - 260V)
2. CURRENT CUNSUMPTION TYP.:
1A / 30% ACTIVE, MEDIUM INTENSITY
3. CURRENT CONSUMPTION max.: 2 A
4. INTERFACE: RS 485
5. COLOR OF HOUSING: BLACK, POWDER COATED
6. COLOR OF LED: AMBER/RGB
7. SURFACE TREATMENT
1) ITEM : NO.1,2,4,20
- COLOR : BLACK
- COLOR CODE : UT-721N TOP N-1.5,G20
- MAKER : PPG
2) ITEM : NO.5
- S/TREATMENT : Zn PLATING

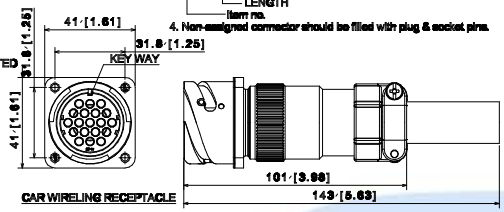

CAR WIRELING RECEPTACLE

NO.	TYPE	SIZE	Q'TY
21-1	ROUND HEAD BOLT	M3XL6	6
	SPRING WASHER	M3X05Xt0.8	
	FLAT WASHER	M3x05.8Xt0.5	
21-2	ROUND HEAD BOLT	M3XL8	40
	SPRING WASHER	M3X05Xt0.8	
	FLAT WASHER	M3x05.8Xt0.5	
21-3	ROUND HEAD BOLT	M3XL8	8
	SPRING WASHER	M3X05Xt0.8	
	FLAT WASHER	M3x07.8Xt0.5	
21-4	ROUND HEAD BOLT	M4XL6	2
	SPRING WASHER	M4X06.8Xt1.0	
	FLAT WASHER	M4x07.8Xt0.8	
21-5	ROUND HEAD BOLT	M4XL6	10
	SPRING WASHER	M4X06.8Xt1.0	
	FLAT WASHER	M4x010Xt0.8	
21-6	ROUND HEAD BOLT	M4XL8	22
	SPRING WASHER	M4X06.8Xt1.0	
	FLAT WASHER	M4x07.8Xt0.8	
21-7	HEXA HEAD BOLT	M5XL16	4
	SPRING WASHER	M5X08.8Xt1.2	
	FLAT WASHER	M5x012Xt1.8	
21-8	FLAT HEAD BOLT	M3XL8	4

X1: CONNECTOR PIN ASSIGMENT
[ITH08F-22-14S(50F6)]

NO.	ITEM
A	POWER VCC
B	
C	POWER GND
D	
E	TX1 +(in)
F	TX1 -(in)
G	TX1 SH(in)
H	
J	
K	
L	ADD 1
M	ADD 2
N	ADD 3
P	ADD 4
R	ADD 5
S	ADD 6
T	ADD 7
U	ADD 8
V	ADD GND

ITEM	품명 DESCRIPTION	재질 SPEC	도번 DWG NO.			표면처리 S/TREATMENT
1	FRAME	A91-CO, t1.2	R1D0000001			PAINTING
2	COVER	A91-CO, t1.2	R1D0000002			PAINTING
3	HOUSE	SS400,DK-S-1089	R1D0000003			
4	INSTALL BRACKET	A5052, t3.2	R1D0000004			PAINTING
5	LED BRACKET	A5052-H, t1	R1D0000005			Zn PLATING
6	AMBER LED DI MAGNIT ARRAY MODULES	GOTLIN-0806Y-16M1, SO-TECH	R1D0000006			
7	LED CONTROL BOARD	PCB, W10	R1D0000007			
8	CONNECTOR	ETHERNET-14RSFWB,SINAR				
9	CONNECTOR	ITH08F22-14PS001F0/ SLSINAR				
10	POWER BOARD	WOOJIN,W8	R1D0000008			
11	RGB COLOR LED DOT MATRIX	GOTLIN-0806Y-16R4, SO-TECH	R1D0000009			
12	NAME PLATE	AL,t1	R1D0000010	-	04	
13	RUBBER GROMMET	EPDM, 4X2mm(1.6 inch)	R1D0000011			
14	PHILLIPS RIVOSSS	DS-010-712-102				
15	RECEPTACLE SLIP CN	DS-225-232-102				
16	RECEPTACLE SLIP N	DS-225-101-202				
17	SUS CP LI HEAD SUS,t1.0	DS-370-001-002				
18	EJECTOR SPRING STAINLESS	D4-S1F0-4-002-QA				
19	EMC TAPE	SF8000TER-0-10-A, 5 meter				
20	BRACKET	A5052, t2.0	R1D0000021			PAINTING
21	BOLT & NUT LIST	ASSY				
22	LIGHT SENSOR	LED3 BOARD, W10	R1D0000000			
23	RUBBER TUBE	4*2,1*1X2M1100MMSLSINAR				
24	GROMMET BRACKET	A5052-H, t1	R1D0000027			
25	GROMMET BRACKET	A5052-H, t1	R1D0000028			
26	STICKER	ASSY	R1D0000029	-	19	
27	EMI WIRING DIAGRAM	ASSY	R1D0000044			
28	LIGHT SENSOR BRACKET	A5052-H, t1	R1D0000037			

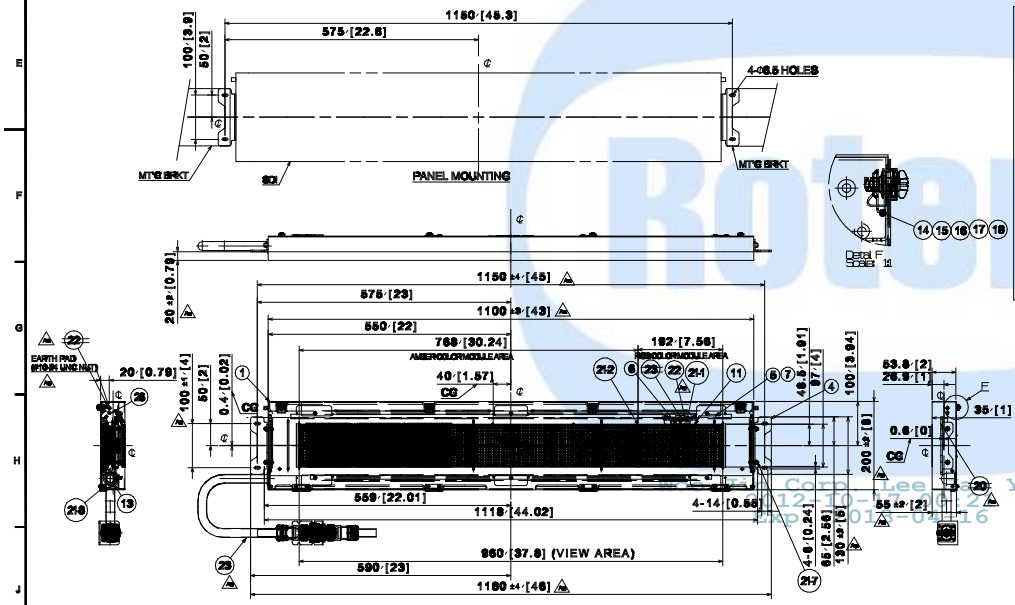

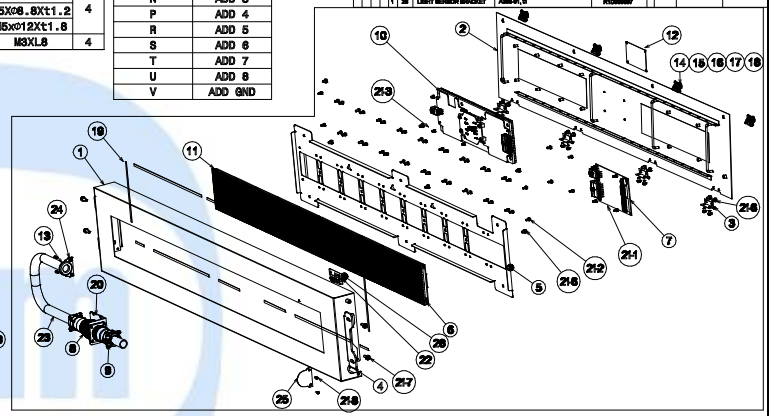

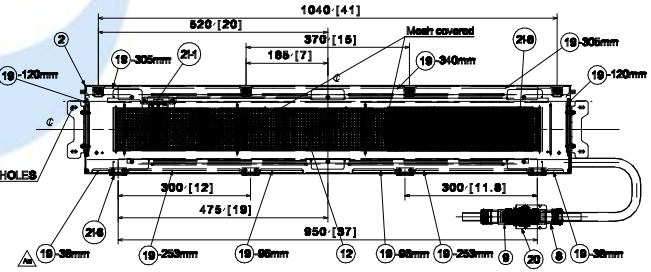

품번 NO.	부품 번호 PART NO.	품 명 DESCRIPTION	재 질 MATERIAL	수량 Q'TY	중량 W.T	비 고 REMARKS

승인 APP	S.H.PARK 2011.03.25	재질 MAT'L ASSY	명 칭 TITLE	SIDE DESTINATION INDICATOR, LEFT SIDE	
검도 CHK	C.Y.LEE 2011.03.17	총중량 G.W 23.4 lbs			
설계 DGN	Y.S.JEON 2011.03.11	일반공차 MC WD CT	도면 번호 DRG. NO	RES22001CT0	Ver. 00 / Rev. -C / RNE1002
제도 DRG		B	MS		
		SIZE C	SCALE N/S	매수 SHEET 1 of 1	본-PRJT

기 호 MARK	일 자 DATE	변 경 내 역 DETAIL OF REVISION(E.C ZONE)	설변번호 E.C NO.	설계 DGN	검도 CHK	승인 APP
Cx1	2012.03.15	Separated from L/R mated drawing.	RNE1002-U090	Y.S.JEON	C.Y.LEE	S.H.PARK
Bx1	2012.01.05	The supplier revised the painting Spec.		Y.S.JEON	C.Y.LEE	S.H.PARK
Ax1	2011.10.25	The supplier revised the drawing for FDR		Y.S.JEON	C.Y.LEE	S.H.PARK

참조번호 REF. NO.

HYUNDAI Rotem 현대로템주식회사

DENVER RTD FASTRACKS
LED SIDE DESTINATION SIGN-1
R1D1473-25850 A급

DIM. IN mm | 척도 SCALE 1 / 5 | 2011.10.07 | B.H.KANG | B.J.JONE | J.Y.LEE

GENERAL TOLERANCE

두께 THICKNESS	~ 40	2	4
	~ 30	2	3
	~ 10	1	1.5
	< 3	0.5	1
길이 LENGTH	~3150	-	7
	~1600	4	5
	~ 800	3	4
	~ 400	2	3
	~ 200	1.5	2
	~ 100	1	1.5
등급 GRADE		A	B
주조, 주강품 CASTING (±)			
~ 20M	8	14	24
~ 15M	7	12	21
~ 12M	6	10	18
~ 8M	5	8	14
~ 4M	4	6	11
~ 2M	3	4	8
~ 1M	2	3	6
~ 315	1	2	4
~ 120	1	2	3
~ 30	1	1	1
등급 GRADE	A	B	C
용접 구조물 WELDING (±)			
~ 20M	-	6.0	8.0
~ 15M	-	5.0	7.0
~ 12M	-	4.0	6.0
~ 8M	-	3.0	5.0
~ 4M	0.8	2.0	4.0
~ 2M	0.5	1.2	3.0
~ 1M	0.3	0.8	2.0
~ 315	0.2	0.5	1.2
~ 120	0.15	0.3	0.8
~ 30	0.1	0.2	0.5
3~6	0.05	0.1	0.2
등급 GRADE	A	B	C
기계 가공품 MACHINING (±)			

Rotem 270430 2012-10-16 10:19
본 도면은 당사 재산으로서 허가없이 무단복사/배포 금지됨. PROPERTY OF ISSUING ENTITY. CANNOT BE DISTRIBUTED OR REPRODUCED WITHOUT AUTHORIZATION.

CATIA