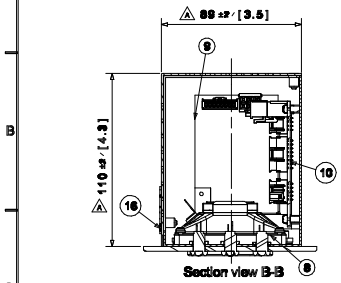

NOTE

1. BOLT DESCRIPTION
   (17) — ITEM NO.
2. EMC TAPE LENGTH DESCRIPTION
   (18-1) ~341mm — Length; Item no.
3. NON-ASSIGNED CONNECTOR SOCKETS/PINS SHOULD BE FILLED
4. LOCATION OF EACH PASSENGER INTERCOMS ARE CONSPICUOUSLY MARKED WITH LUMINESCENT MATERIAL.

TECHINICAL DATA

1. POWER : DC 37.5V Max.31W
2. SURFACE TREATMENT
   1) ITEM : NO. 2,3
      - COLOR : BLACK
      - COLOR CODE : UT-721N TOP N-1.5,G20
      - MAKER : PPG
   2) ITEM : NO. 1
      - HAIRLINE #180
3) ITEM : NO.1
   TEXT PAINT SPEC.
   - PAINT CODE : #500-150-A0010
   - MAKER : JE-BI PYO
   - MATERIAL : ENAMEL
4) ITEM : NO.6
   - SILK PRINT COLOR : RED (SAMSUNG INK)
   - UPPER COATING : Akron #2000(A310-A4052)
3. SPEAKER
   1) IMPEDANCE : 8ohm ±15%
   2) POWER RATING : 3W (MAX.5W)
   3) SOUND PRESSURE LEVEL : 86dB ± 3dB
   4) RESONANCE FREQUENCY : 240±20%
   5) FREQUENCY RANGE : 0~20,000Hz
4. WEIGHT : 2kg
   2.4

NO.	TYPE	SIZE	QTY
17-1	FAN HEAD SCREW	M3x1.6	8
	SPRING WASHER	M3×t0.8	8
	FLAT WASHER	M3×6.8×0.5	8
17-2	FAN HEAD SCREW	M3x1.10	4
	SPRING WASHER	M3×t0.8	4
	FLAT WASHER	M3×6.8×0.5	4
17-3	FAN HEAD SCREW	M3x1.12	4
	SPRING WASHER	M3×t0.8	4
	FLAT WASHER	M3×6.8×0.5	4
17-4	FLAT HEAD SCREW	M3x1.10	4
17-5	HEXAGON NUT	M4	4
	PWAHER & SPRING	M4	4

X1: PIN ASSIGNMENT
[ITH03FPA28-21P30G1F6]

NO.	ITEM	NO.	ITEM
A	POWER1-VCC	a	DUAL TONE+(out)
B	POWER1-GND	b	DUAL TONE-(out)
C		c	DUAL TONE RH(out)
D		d	DUAL TONE+(in)
E	LIVE	e	DUAL TONE-(in)
F	LIVE ADD GND(in)	f	DUAL TONE RH(in)
G	LIVE ADD GND(out)	g	
H		h	
J		j	
K	PEI RX+(out)	k	
L	PEI RX-(out)	m	
M	PEI RX RH(out)	n	
N	PEI TX+(out)	p	
P	PEI TX-(out)	r	
R		s	
S	PEI RX+(in)		
T	PEI RX-(in)		
U	PEI RX RH(in)		
V	PEI TX+(in)		
W	PEI TX-(in)		
X			
Z			

품번 GROUP NO.				품번 ITEM	품 명 DESCRIPTION	사 양 SPEC	도면번호 DWG NO.	-	재질 및 규격	중량.길이 폭 x 두께	표면처리 S/TREATMENT
			1	1	FRONT PANEL	304SS,t3.0	R1D000384				HAIRLINE#180
			1	2	FRAME	A356-01, t1.2	R1C000055				PAINTING
			1	3	REAR COVER	A591-CQ, t1.2	R1D000385				PAINTING
			1	4	SPEAKER	4070N01-8C240-8H15+,8ohm,3W	R1D000374				
			1	5	SWITCH BLOCK	5112R,2KX1723 LPI 5112B,2KN1723 -APEM	R1D000390				
			1	6	SWITCH HOLDER	304SS	R1D000391				
			1	7	MIC BOARD	ASSY	R1D000387	-	01		
			1	8	LED BOARD	ASSY	R1D000383	-	01		
			1	9	POWER CONVERTER BOARD	VICOR	R1D000389				
			1	10	PEI CONTROL BOARD	PEI-CB	R1D000386				
			1	11	LED INDICATOR(GREEN)	VL3000P300	R1D000383	-	04		
			1	12	LED INDICATOR(RED)	VL3000P600	R1D000383	-	03		
			1	13	LED INDICATOR(YELLOW)	VL3000P500	R1D000383	-	02		
			1	14	MICROPHONE	AOM-4544P-WM-55A103/Panasonic	R1D000387	-	02		
			1	15	CONNECTOR	ITH03FPA28-21P30G1F6/GLENAIR					
			1	16	NAME PLATE	ALM-1	R1D000482	-	11		
			1	17	BOLT & WASHER LIST	ASSY					
			7	18	EMC TAPE	SF060010R-C-NA-A, E-SONG					
			1	19	CONNECTOR	ITH06F28-21B90F6/GLENAIR					
			1	20	WIRE MESH	304SS	R1D000450	-	01		
			1	21	WIRE MESH	304SS	R1D000450	-	02		
			1	22	SHEET	304SS,t0.7	R1D000450	-	03		
			1	23	RUBBER SHEET	RUBBER,t5.0	R1D000377				
			1	24	RUBBER SHEET	RUBBER,t5.0	R1D000388				
			1	25	PEI WIRING DIAGRAM	ASSY	R1D000448				

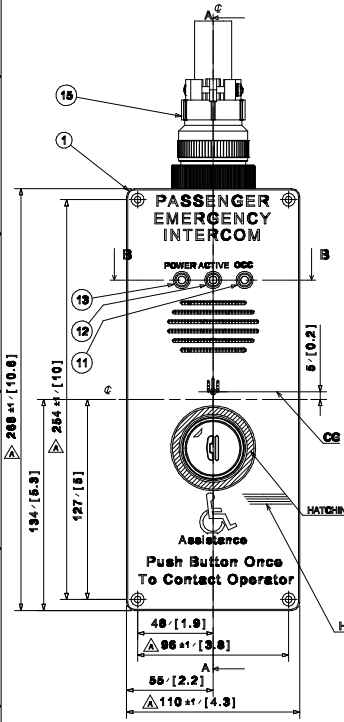

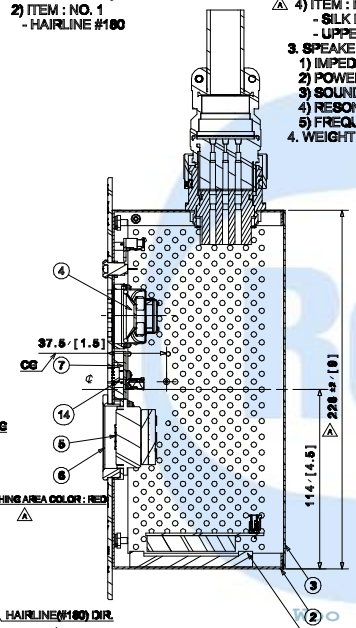

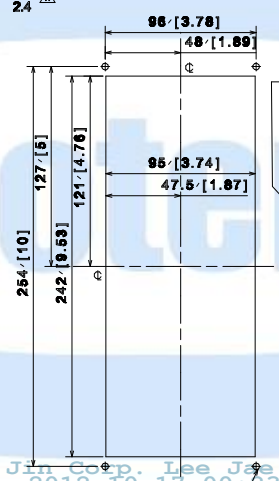

#10-24UNC, 10L, STANDOFF
EARTH PAD

EMC GASKET

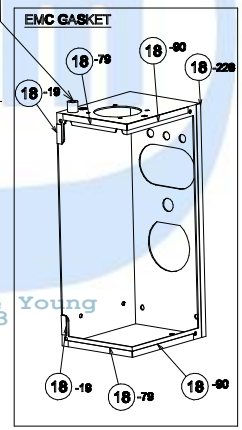

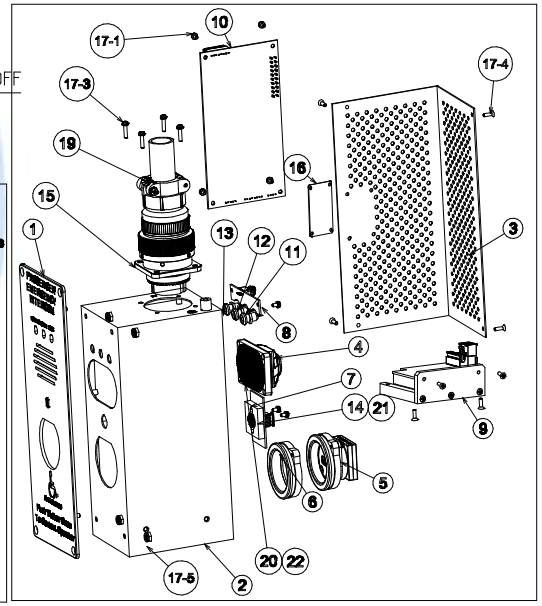

품번 NO.	부품 번호 PART NO.	품 명 DESCRIPTION	재 질 MATERIAL	수량 Q'TY	중량 W.T	비 고 REMARKS
Dx1	2012.03.15	The supplier revised the weight and Dim.	RNE1002-U090	Y.S.JEON	C.Y.LEE	S.H.PARK
Cx1	2012.01.05	User request to apply tactile button.		Y.S.JEON	C.Y.LEE	S.H.PARK
Bx1	2011.12.01	The supplier revised the drawing for FDR		Y.S.JEON	C.Y.LEE	S.H.PARK
Ax1	2011.10.25	The supplier revised the drawing for FDR		Y.S.JEON	C.Y.LEE	S.H.PARK
기 호 MARK	일 자 DATE	변 경 내 역 DETAIL OF REVISION(E.C ZONE)	설변번호 E.C NO.	설계 DGN	검도 CHK	승인 APP

승인 APP	S.H.PARK 2011.07.14	재질 MAT'L ASSY
검도 CHK	C.Y.LEE 2011.07.13	총중량 G.W 5.2 lbs
설계 DGN	Y.S.JEON 2011.07.12	일반공차 MC WD CT
제도 DRG		B
		SIZE C

명 칭 TITLE: PASSENGER EMERGENCY INTERCOM TYPE-2

도면 번호 DRG. NO: RES16002CT0 — Ver. 00 — Rev. -D — RNE1002

MS — SCALE N/S — 매수 SHEET 1 of 1

참고번호 REF. NO.

HYUNDAI Rotem 현대로템주식회사

본-PRJT

정리번호

CATIA

DENVER RTD FASTRACKS

PASSENGER EMERGENCY INTERCOM 2

R1D1473-26839 — A

DIM. IN mm	작성일 DATE	2011.09.30	승인 APPROVED
척도 SCALE	작성 DRAWN	B.H.KANG	
1 / 2	설계 DESIGNED	-	B.J.JONE
공차 적용기준 : WMS C 40201	검토 CHECKED	J.Y.LEE	

설계MEMO

개정 CHANGE

품명	구조물 CASTING (±)		
~ 20M	8	14	24
~ 15M	7	12	21
~ 12M	6	10	18
~ 8M	5	8	14
~ 4M	4	6	11
~ 2M	3	4	8
~ 1M	2	3	6
~ 315	1	2	4
~ 120	1	2	3
~ 30	1	1	1
등급 GRADE	A	B	C

품명	용접 구조물 WELDING (±)		
~ 20M	-	6.0	8.0
~ 15M	-	5.0	7.0
~ 12M	-	4.0	6.0
~ 8M	-	3.0	5.0
~ 4M	0.8	2.0	4.0
~ 2M	0.5	1.2	3.0
~ 1M	0.3	0.8	2.0
~ 315	0.2	0.5	1.2
~ 120	0.15	0.3	0.8
~ 30	0.1	0.2	0.5
3~6	0.05	0.1	0.2
등급 GRADE	A	B	C

품명	기계 가공품 MACHINING (±)		
~ 40	2	4	
~ 30	2	3	
~ 10	1	1.5	
< 3	0.5	1	
~3150	-	7	
~1600	4	5	
~ 800	3	4	
~ 400	2	3	
~ 200	1.5	2	
~ 100	1	1.5	
등급 GRADE	A	B	

품명	주조, 주강품 CASTING (±)		
~ 20M	8	14	24
~ 15M	7	12	21
~ 12M	6	10	18
~ 8M	5	8	14
~ 4M	4	6	11
~ 2M	3	4	8
~ 1M	2	3	6
~ 315	1	2	4
~ 120	1	2	3
~ 30	1	1	1
등급 GRADE	A	B	C

일반공차 GENERAL TOLERANCE

Rotem 270430 2012-10-16 10:19
Woo Jin Corp. Lee Jae Young 2012-10-17 00:23 Exp: 2012-10-16
본 도면은 당사 재산으로서 허가없이 무단복사/배포 금지됨. PROPERTY OF ISSUING ENTITY. CANNOT BE DISTRIBUTED OR REPRODUCED WITHOUT AUTHORIZATION.