군번 GROUP NO.					품번 ITEM	품 명 DESCRIPTION	사 양 SPEC	도면번호 DWG NO.	-	품번 및 군번	중량 . 길이 폭 x 길이	표면처리 S/TREATMENT
				1								
				2	1	36P PLUG(RUBBER COUPLING)	FRITS4108RGG36-35SB0PG36F6/NEXUS					
				2	2	ADAPTER-PG36	M8BSM36P36					
				1	3	CONDUIT TUBE	RLTPC36B,PA12					
				2	4	GASKET	ASSY,t=1.8					
				2	5	NAME LABEL	304SS,t=0.5(MAX.)					

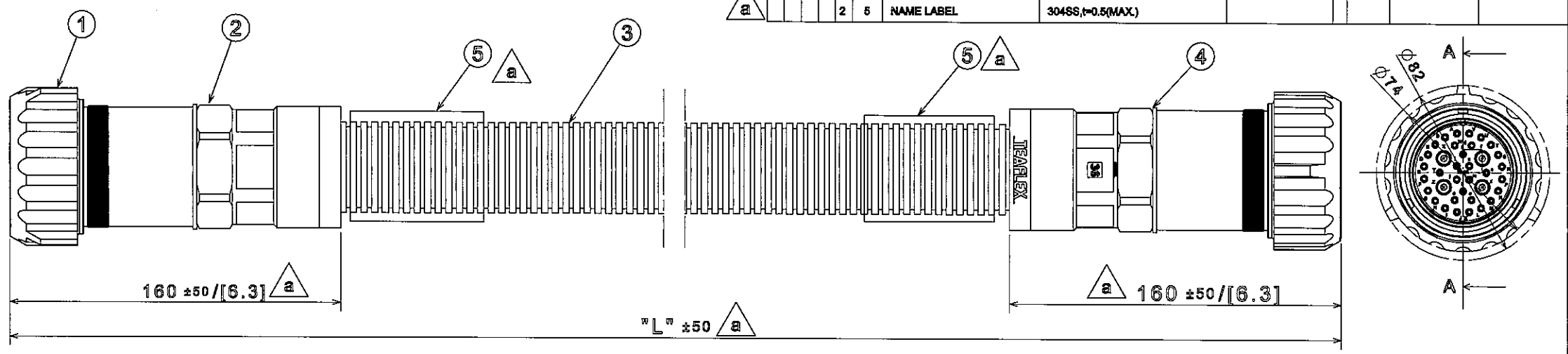

NOTE.
1. KIND OF CONNECTOR
 - Straight plug supplied with PG36 adapter
2. TECHNICAL CHARACTERISTICS
 - Arrangement : 36-35
 - Contacts: 4 size8 coax type contacts for RG59
  32 size 16 pin crimp contacts
 - Working voltage: 700Vdc,500Vac
 - Test voltage: 2,000Vac
 - Current rating: size8 = 73A at 20'C
  size16 = 22A at 20'C
 - Working temperature: (-55~+125)'C
 - IP rating (coupled connector): IP67
3. MATERIAL AND FINISH
 Contacts:
  -copper alloy
  -gold plating
 Inserts:
  -fire-resistant ethylene acrylic rubber
 Metallic parts:
  -aluminium alloy
  -electrodeposition of black paint(F6)
4. WEIGHT : 4.14kg
5. Non-assignment connector sockets/pins should be filled with sealing plug.
 (Signal pin : 10-305045-16
 Coaxial pin : 10-305045-8, GLENAIR)

a JUMPER COUPLER PIN ASSIGNMENT

NO.	ITEM	TLC	NO.	ITEM	TLC
A	PEI1 LIVE ADD	84L01	a		
B	PEI2 LIVE ADD	84L02	b		
C	PEI3 LIVE ADD	84L03	c		
D	PEI4 LIVE ADD	84L04	d		
E			e		
F			f	VIDEO OUT	COAXIAL(L)
G			g		
H			h		
I	PEI LIVE ADD GND	84L09	i		
J	DPO LIVE ADD1	84L30	j		
K	DPO LIVE ADD2	84L31	m		
L	DPO LIVE ADD GND	84L32	n		
M					
N					
P					
R					
S					
T	DPH LIVE ADD1	84L38			
U	DPH LIVE ADD2	84L39			
V	DPH LIVE ADD GND	84L40			
W					
X	VIDEO IN	COAXIAL(R)			
Y					
Z					

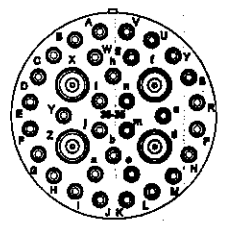

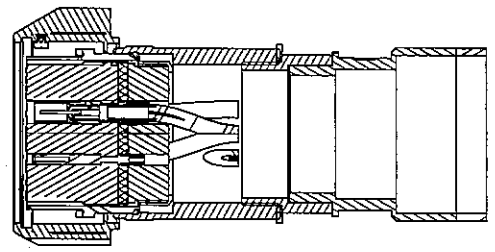

Section view A-A
Scale: 1:2

	DIMENSION
"L"	APPROX 3,200 +/- 50 [125.98 +/- 1.96]

개정 CHANGE		
1)Weight & Sealing plug added. 2)P/MKS changed. 3)P/No.5 added. 4)JACR pin assignment added. 2012.03.12	DGN H.Y.SHIN	APP B.J.JONE

GENERAL TOLERANCE (WMS-C-40201)

설계MEMO	
DIM. IN mm	
척도 SCALE	1 / 2
공차 적용기준 : WMS C 40201	

WOOJIN Industrial Systems Co., Ltd.

작성일 DATE	2011.10.07	승인 APPROVED	B.J.JONE
작성 DRAWN	B.H.KANG		
설계 DESIGNED	-		
검토 CHECKED	J.Y.LEE		

DENVER RTD FASTRACKS

JUMPER COUPLER PLUG

R1D1473-25868 a

품번 NO.	부품 번호 PART NO.	품 명 DESCRIPTION	재 질 MATERIAL	수량 Q'TY	중량 W.T	비 고 REMARKS
승인 APP	S.H.PARK 2011.03.25	제품 MAT'L ASSY				
검도 CHK	C.Y.LEE 2011.03.17	총중량 G.W 9.1 lbs				
설계 DGN	Y.S.JEON 2011.03.11	일반공차 MC WO CT B				
제도 DRG		SIZE C				

명 칭 TITLE: VIDEO JUMPER CABLE ASSEMBLY

도면 번호 DRG. NO: REJ50001CT0 Ver. 00 Rev. -C

SCALE N/S 매수 SHEET 1 of 1

HYUNDAI Rotem 현대로템주식회사

기호 MARK	일자 DATE	변경내역 DETAIL OF REVISION(E.C ZONE)	설변번호 E.C NO.	설계 DGN	검도 CHK	승인 APP
Cx1	2012.03.15	The supplier revised the weight and Dim.	RNE1002-U030	Y.S.JEON	C.Y.LEE	S.H.PARK
Bx1	2012.01.05	The supplier revised the painting spec.		Y.S.JEON	C.Y.LEE	S.H.PARK
Ax1	2011.10.25	The supplier revised the drawing for FDR		Y.S.JEON	C.Y.LEE	S.H.PARK

참고번호 REF. NO.

RNE1002

년-PRJT

정리번호

본 도면은 당사 재산으로서 허가없이 무단복사 및 배포 금지됨. PROPERTY OF ISSUING ENTITY. CANNOT BE DISTRIBUTED OR REPRODUCED WITHOUT AUTHORIZATION.

CATIA

Hyundai Rotem 254096 2012-05-14 12:34
Hyundai Rotem|10.196.33.77|254096|2012-05-15 16:42:49

군번 GROUP NO.	품번 ITEM	품 명 DESCRIPTION	사 양 SPEC	도면번호 DWG NO.	-	품번 및 군번	중량 . 길이 폭 x 길이	표면처리 S/TREATMENT
1	1	RECEPTACLE	FRITS4100RS36-35PB0G1F6					
1	2	GASKET	RUBBER					

NOTE.

1. KIND OF CONNECTOR
   - Front panel mounting receptacle
2. TECHNICAL CHARACTERISTICS
   - Arrangement : 36-35
   - Contacts: 4 size8 coax type contacts for RG59
     32 size 16 pin crimp contacts
   - Working voltage: 700Vdc,500Vac
   - Test voltage: 2,000Vac
   - Current rating: size8 = 73A at 20℃
     size16 = 22A at 20℃
   - Working temperature: (-55~+125)℃
   - IP rating (coupled connector): IP67
3. MATERIAL AND FINISH
   Contacts:
   -copper alloy
   -gold plating
   Inserts:
   -fire-resistant ethylene acrylic rubber
   Gasket:
   -neoprene rubber
   Metallic parts:
   -aluminium alloy
   -electrodeposition of black paint(F6)
4. WEIGHT : 0.22kg
5. NON-ASSIGNED CONNECTOR SOCKETS/PINS SHOULD BE FILLED WITH SEALING PLUG. (SEALING PLUG : 10-305045-16, GLENAIR) (a)

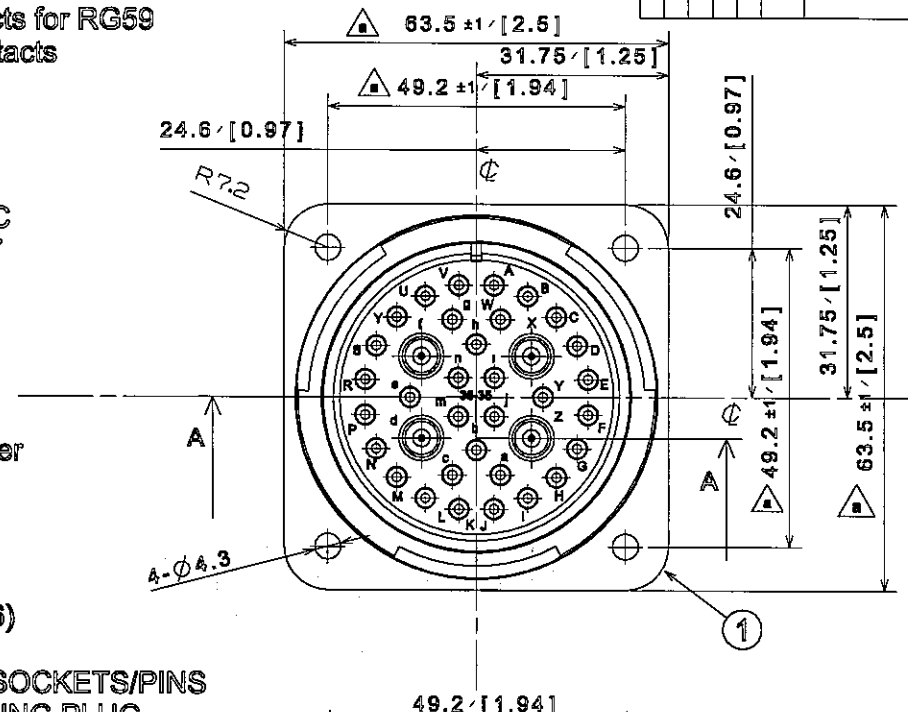

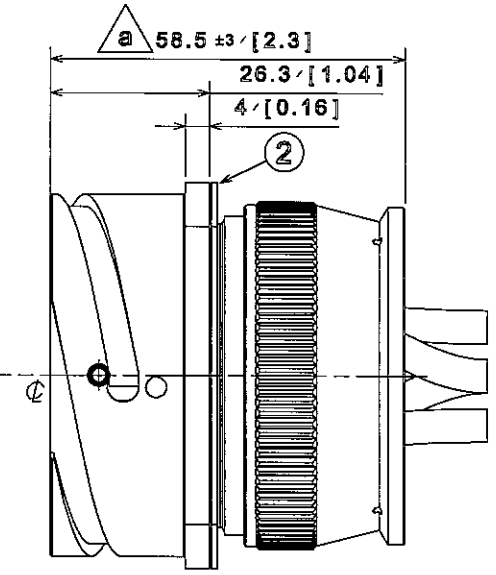

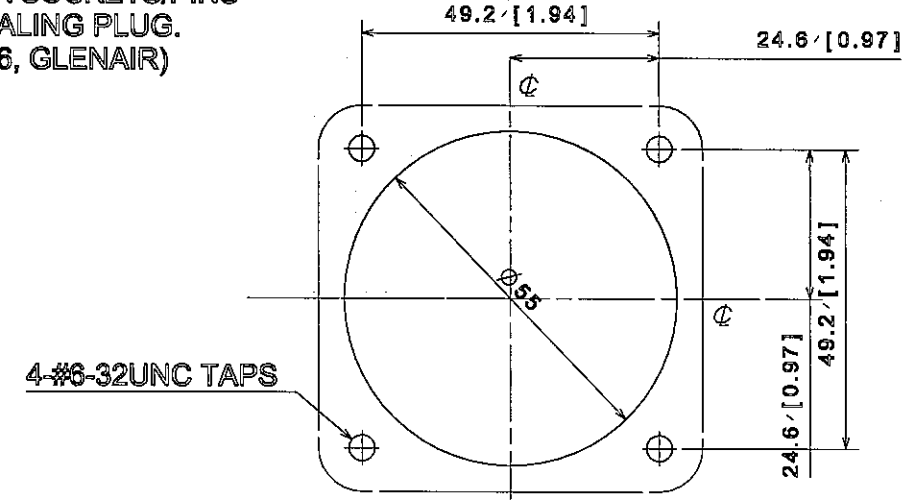

PANEL MOUNTING

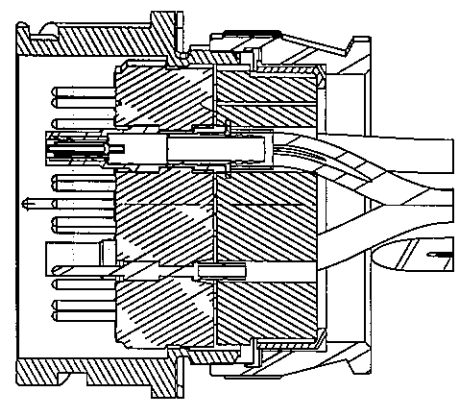

Section view A-A
Scale: 1:1

개정 CHANGE			
1)Weight & Sealing plug added. 2)Tolerance added.	2012.03.05	B.J.JONE	B
		B.J.JONE	A
		N.Y.SHIN	
		DGN	

GENERAL TOLERANCE (WMS-C-40201)

설계MEMO	DIM. IN mm	작성일 DATE	2011.10.07	승인 APPROVED
	척도 SCALE	작성 DRAWN	B.H.KANG	B.J.JONE
	1 / 1	설계 DESIGNED	-	
공차 적용기준 : WMS C 40201		검토 CHECKED	J.Y.LEE	

WOOJIN Industrial Systems Co., Ltd.

DENVER RTD FASTRACKS

JUMPER COUPLER RECEPTACLE

R1D1473-25669

품번 NO.	부품 번호 PART NO.	품 명 DESCRIPTION	재 질 MATERIAL	수량 Q'TY	중량 W.T	비 고 REMARKS
승인 APP	S.H.PARK 2011.03.25	재질 MAT'L ASSY				
검도 CHK	C.Y.LEE 2011.03.17	총중량 G.W 0.5 lbs				
설계 DGN	Y.S.JEON 2011.03.11	일 반 공 차 MC WD CT				
제도 DRG		B				
		SIZE C				

명 칭 TITLE: VIDEO JUMPER RECEPTACLE

도면 번호 DRG. NO: REJ50002CT0 (MS) Ver. 00 Rev. -C

RNE1002

SCALE N/S 매수 SHEET 1 of 1

HYUNDAI Rotem 현대로템주식회사

년-PRJT

정리번호

기호 MARK	일 자 DATE	변 경 내 역 DETAIL OF REVISION(E.C ZONE)	설변번호 E.C NO.	설계 DGN	검도 CHK	승인 APP
Cx1	2012.03.15	The supplier revised the weight and Dim.	RNE1002-U030	Y.S.JEON	C.Y.LEE	S.H.PARK
Bx1	2012.01.05	The supplier revised the painting spec.		Y.S.JEON	C.Y.LEE	S.H.PARK
Ax1	2011.10.25	The supplier revised the drawing for FDR		Y.S.JEON	C.Y.LEE	S.H.PARK

참조번호 REF. NO.

본 도면은 당사 재산으로서 외부에서 무단복사/배포 금지함. PROPERTY OF ISSUING ENTITY. CANNOT BE DISTRIBUTED OR REPRODUCED WITHOUT AUTHORIZATION.

CATIA

Hyundai Rotem 254096 2012-05-14 12:34
Hyundai Rotem|10.198.33.77|254096|2012-1|-15 18:43:27

RELEASED 2012.09.27

TECHNICAL DATA :

1. SPEAKER
   1) IMPEDANCE : 8ohm ±15%
   2) POWER RATING : 25W
   3) MATCHING : 70V (ADDITIONAL TAPS 4,2,1,1/2W,1/4W)
   4) SOUND PRESSURE LEVEL : 93dB ± 2dB
   5) RESONANCE FREQUENCY : 200±50Hz
   6) FREQUENCY RANGE : 200~13,000Hz
2. WEIGHT : 2.5kg
3. SURFACE TREATMENT
   1) ITEM : NO. 2
      - COLOR : BLACK
      - COLOR CODE : UT-721N TOP N-1.5,G20
      - MAKER : PPG
   2) ITEM : NO. 1
      - HAIRLINE #180
   3) ITEM : NO. 3
      - S/TREATMENT : Zn PLATING

EXTERNAL CN ASSIGNMENT

1. AUDIO IN1 +
2. AUDIO IN1 -
3. AUDIO IN1 SHIELD
4. AUDIO IN2 +
5. AUDIO IN2 -
6. AUDIO IN2 SHIELD
7. MUTE +
8. MUTE -

CN 4

1. SPEAKER+
2. SPEAKER-
3. NC.

NOTE

1. BOLT TYPE DESCRIPTION
   (12-) — ITEM NO.
2. EMC GASKET LENGTH DESCRIPTION
   (11) -255mm — LENGTH, ITEM NO.

NO.	TYPE	SIZE	Q'TY
12-1	ROUND HEAD BOLT	M3xL8	4
	SPRING WASHER	M3xØ6xt0.8	4
	FLAT WASHER	M3xØ5.8xt0.5	4
12-2	ROUND HEAD BOLT	M4xL14	2
	SPRING WASHER	M4xØ6.8xt1.0	2
	FLAT WASHER	M4xØ7.8xt0.8	2
12-3	ROUND HEAD BOLT	M3xL14	2
	SPRING WASHER	M3xØ6xt0.8	2
	FLAT WASHER	M3xØ5.8xt0.5	2
12-4	FAN HEAD SCREW	M4xL8	4
	SPRING WASHER	M4xØ6.8xt1.0	4
	FLAT WASHER	M4xØ7.8xt0.8	4
12-5	FLAT HEAD SCREW	M3xL8	4

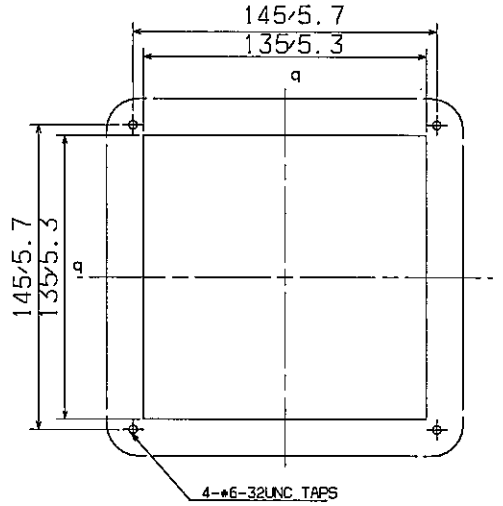

PANEL CUTOUT

ITEM	DESCRIPTION	SPEC	DWG NO.			S/TREATMENT
1	FRONT PANEL	SUS304, t3.0	R1D000395			HAIRLINE#180
2	REAR COVER	A5491-CD, t1.0	R1C000057			PAINTING
3	BRACKET	A366-91, t1.2	R1D000394			Zn PLATING
4	SPEAKER	DAESHIN ENG. SF-4025C PMB-B-EPTECH	R1D000405			
5	CONTROL BOARD	SP-1SP, WIS	R1D000396			
6	CONNECTOR	231-608/019-000, WAGO				
7	CONNECTOR	231-108/037-000, WAGO				
8	NAME PLATE	AL,t=1	R1D000452	-	12	
9	RUBBER GROMMET	EPDM, Ø15mm(0.59inch)	R1D000397			
10	HARNESS	100G0111-0.5-0,RAYCHEM				
11	EMC GASKET	SF050010R-C-NA-A, E-SONG				
12	BOLT & WAHER LIST	ASSY				
13	GASKET	RUBBER	R1D000398			
14	WIRE MESH	304SS,SCREEN #30,Ø0.3	R1D000449	-	01	
15	SHEET	304SS,t0.7	R1D000449	-	02	
16	ISP WIRING DIAGRAM	ASSY	R1D000457			
17	RUBBER TUBE	Ø9,PHZ20095BN4/GLENAIR				

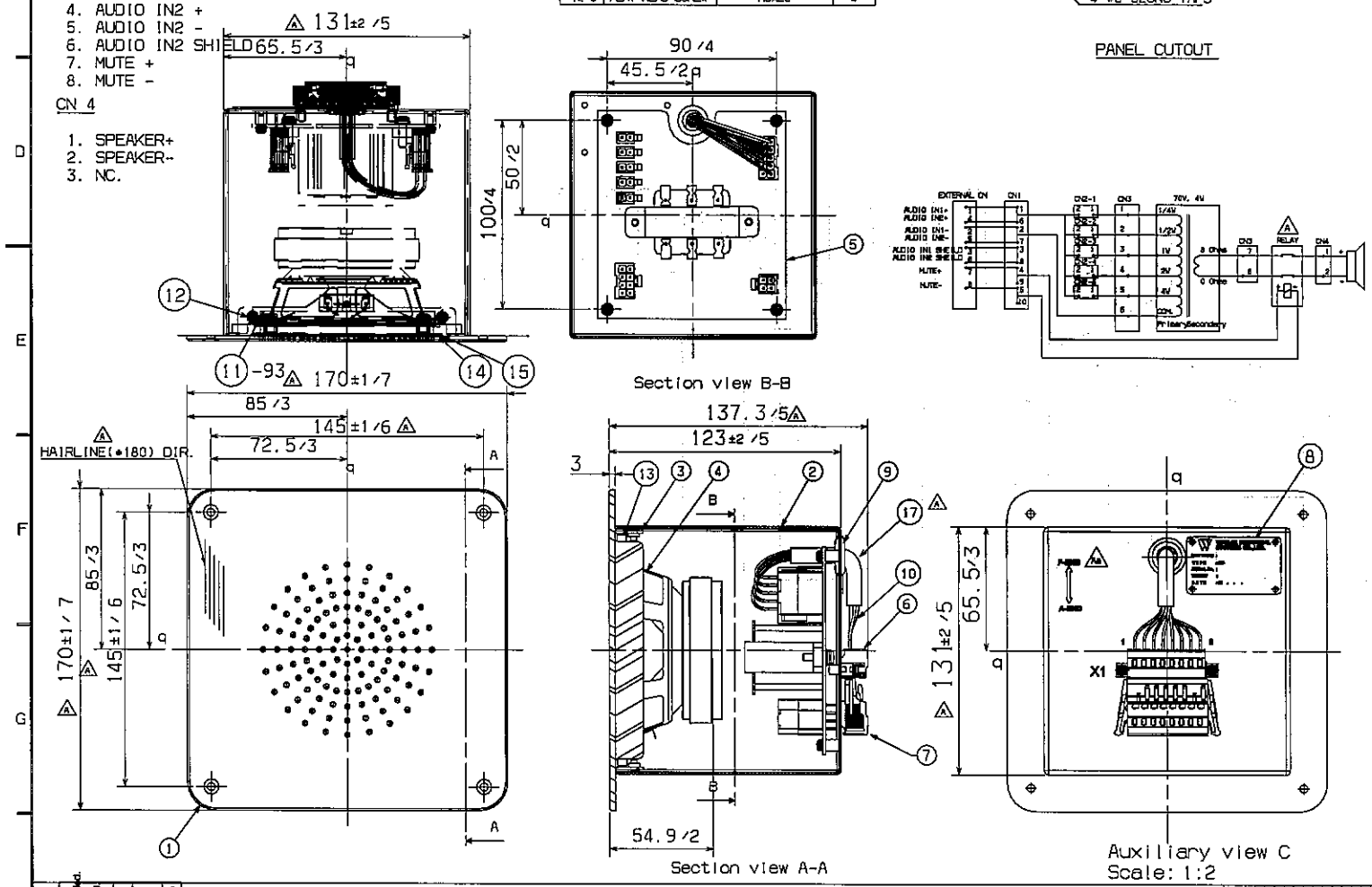

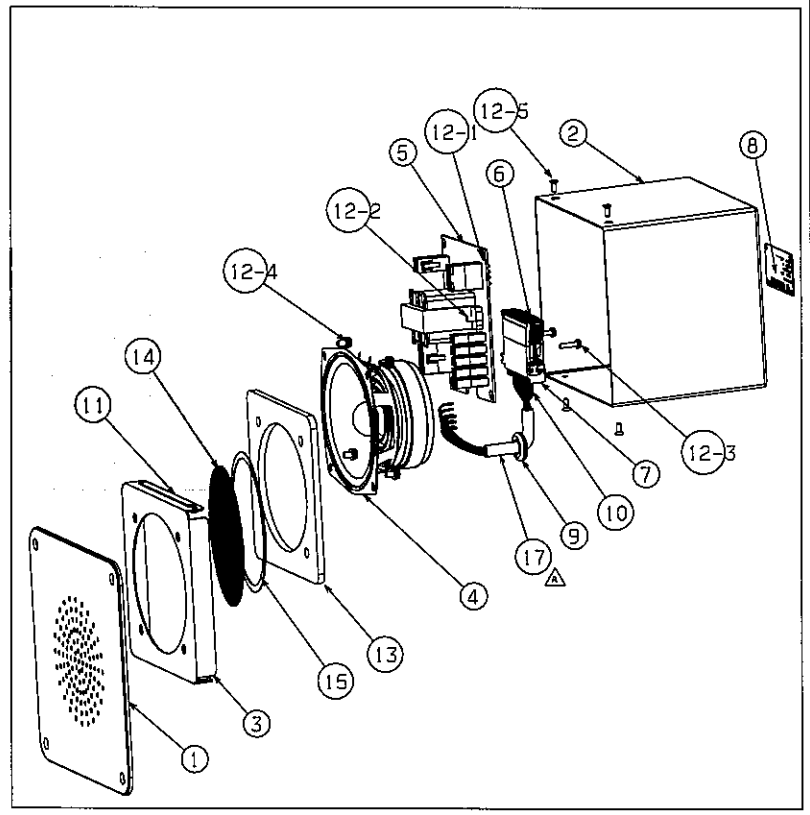

CHANGE	1)EMC gasket Q'TY changed. 2)Dim. tol. changed. 3)Tolerance added. 4)Hairline direction added.	2012.08.07	2012.08.07

GENERAL TOLERANCE (KS B ISO 2768-1)

MEMO			
DIM. IN (mm)	DATE	2011.09.30	APPROVED
SCALE 1 / 2	DRAWN	B.H.KANG	B.J.JONE
	DESIGNED	-	
	CHECKED	J.Y.LEE	

±Ø : KS C 4040

WOOJIN Industrial Systems Co.,Ltd.

DENVER RTD FASTRACKS

INTERIOR SPEAKER

R1D1473-25857 A

기호 MARK	일자 DATE	변경내역 DETAIL OF REVISION(E.C ZONE)	설변번호 E.C NO.	설계 DGN	검도 CHK	승인 APP
Dx1	2012.08.07	The supplier revised the mark of direction.	RNE1002-U144	Y.S.JEON	C.Y.LEE	S.H.PARK
Cx1	2012.03.15	The supplier revised the weight and Dim.		Y.S.JEON	C.Y.LEE	S.H.PARK
Bx1	2012.01.05	The supplier revised painting spec.		Y.S.JEON	C.Y.LEE	S.H.PARK
Ax1	2011.10.25	The supplier revised the drawing for FDR		Y.S.JEON	C.Y.LEE	S.H.PARK

품번 NO.	부품번호 PART NO.	품명 DESCRIPTION	재질 MATERIAL	수량 Q'TY	중량 W.T	비고 REMARKS

승인 APP	S.H.PARK 2011.03.25	재질 MAT'L ASSY	명칭 TITLE: INTERIOR SPEAKER
검도 CHK	C.Y.LEE 2011.03.17	총중량 G.W 5.4 lbs	
설계 DGN	Y.S.JEON 2011.03.11	일반공차 MC WD CT	도면번호 DRG. NO: RES11002CT0 Ver. 00 Rev. -0
제도 DRG		8 / SIZE C	SCALE N/S 매수 SHEET 1 of 1

참조번호 REF. NO.

HYUNDAI Rotem 현대로템주식회사

RNE1002 — 년-PRJT — 정리번호

CATIA

본 도면은 당사 재산으로서 승인없이 무단복사/배포 금지됨. PROPERTY OF ISSUING ENTITY. CANNOT BE DISTRIBUTED OR REPRODUCED WITHOUT AUTHORIZATION.

Hyundai Rotem 254096 2012-09-28 11:48
Hyundai Rotem|10.196.35.77|254096|2012-10-15 18:31:15

RELEASED 2012.10.12

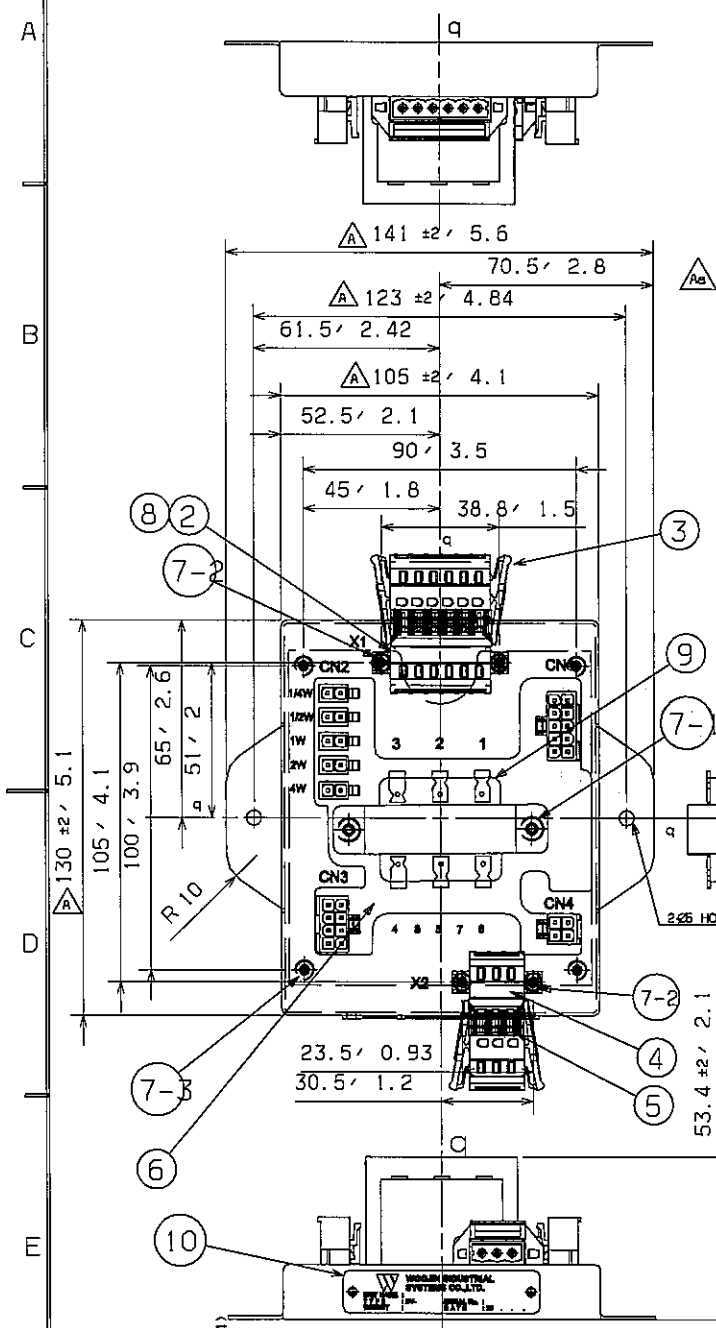

BOLT TYPE DESCRIPTION

7 — Item no.

NOTE.
1. WEIGHT : 0.54kg
2. SURFACE TREATMENT
   1) ITEM : NO. 1
      - COLOR : BLACK
      - COLOR CODE : UT-721N TOP N-1.5,G20
      - MAKER : PPG
3. DEFAULT RATING IS 4W
4. RED HEAT SHRINK TUBES ARE THE PRIMARY WIRES

NO.	TYPE	SIZE	Q'TY
7-1	ROUND HEAD BOLT	M4XL14	2
	SPRING WASHER	M4X25.8Xt1.0	
7-2	ROUND HEAD BOLT	M3XL14	4
	SPRING WASHER	M4X25.8Xt1.0	
	FLAT WASHER	M4X07.8Xt0.8	
7-3	SPRING WASHER	M3X25Xt0.8	4
	FLAT WASHER	M3X25.8Xt0.5	
	ROUND HEAD BOLT	M3XL8	

GROUP NO.	ITEM	DESCRIPTION	SPEC	DWG NO.			S/TREATMENT
1	1	BRACKET	A366-91, t1.2	R1D000416			PAINTING
1	2	CONNECTOR	231-606/019-000, WAGO				
1	3	CONNECTOR	231-106/037-000, WAGO				
1	4	CONNECTOR	231-603 /019-000, WAGO				
1	5	CONNECTOR	231-103 / 037-000, WAGO				
1	6	ISP BOARD	ASS'Y				
1	7	BOLT & NUT LIST	ASS'Y				
8	8	CORD-END TERMINALS	CE007506				
1	9	Transformer	WJ-ST-70V4W, SAMIK				
1	10	NAME LABEL	304SS,t0.5	R1D000452	-	18	
1	11	TRF WIRING DIAGRAM	ASS'Y	R1D000502			

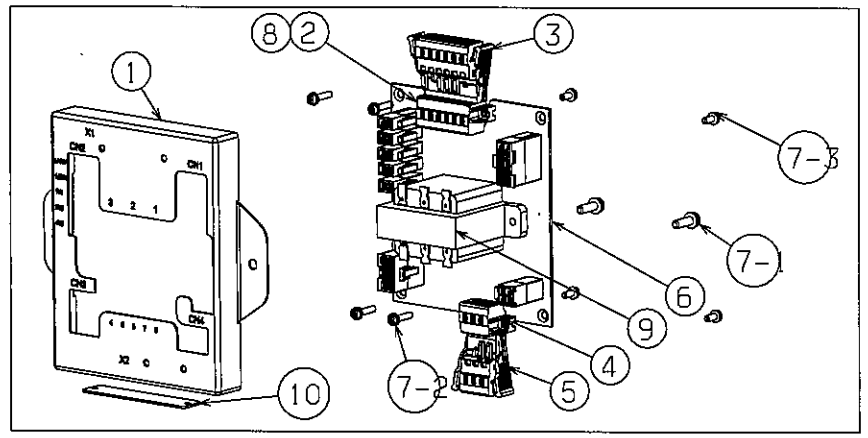

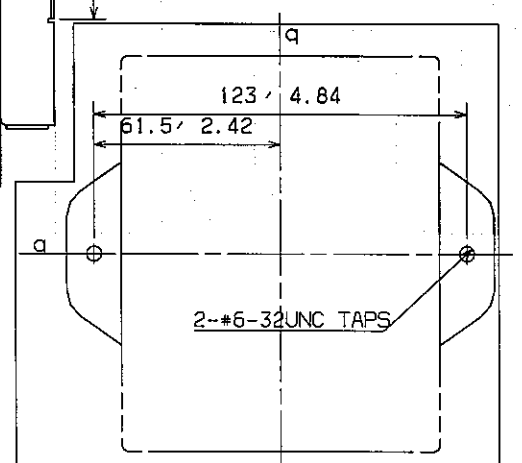

PANEL MOUNTING

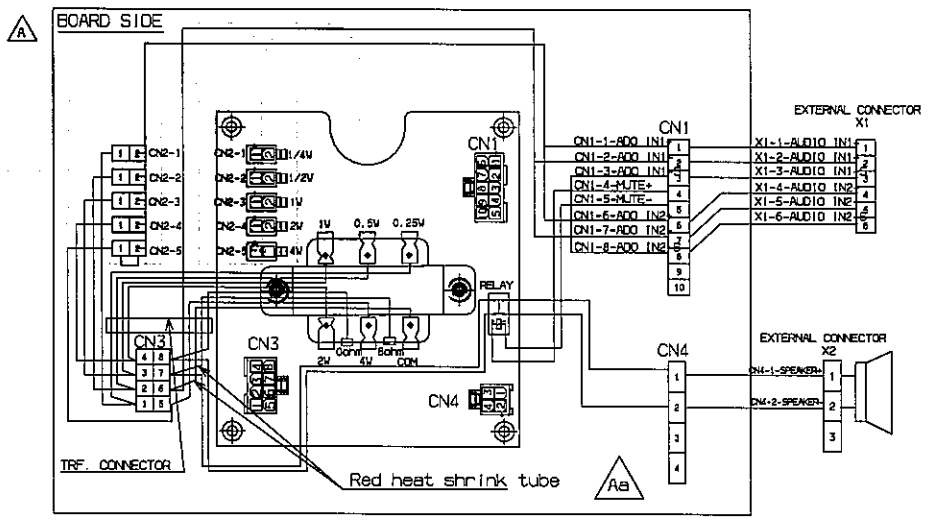

1) Material(P/No.10) corrected.	DGN	H.Y.SHIN	A
2)Tolerance added.	APP	B.J.JONE	A
3)Wiring diagram revised. 2012.03.12			
Default rating added.(Note No.3) Shrink tube color added.(Note No.4) 2012.08.30	DGN	H.Y.SHIN	A6
	APP	B.J.JONE	A6

CHANGE

GENERAL TOLERANCE (WMS-C-40201)

DIMENSION	WELDING	MACHINING
0.5 ~ 4mm	±0.3	±0.1
5 ~ 30mm	±0.5	±0.2
30 ~ 120mm	±0.8	±0.3
120 ~ 315mm	±1.2	±0.5
315 ~ 1000mm	±2.0	±0.8
1000 ~ 2000mm	±3.0	±1.2
2000 ~ 4000mm	±4.0	±2.0
4000 ~ 6000mm	±5.0	±3.0
6000 ~ 12500mm	±7.0	±5.0
12500 ~ 25400mm	±10.0	±7.0
		±15.0

DIMENSION	CASTING
~120mm	±2.0
120 ~ 315mm	±2.5
315 ~ 630mm	±3.5
630 ~ 1250mm	±5.0
1250 ~ 2500mm	±7.0
2500 ~ 5000mm	±10.0

GRADE	A	B	C
주조 구조물 CASTING (±)			
~ 20M	6	14	24
~ 15M	7	12	21
~ 12M	6	10	18
~ 8M	5	8	14
~ 4M	4	6	11
~ 2M	3	4	8
~ 1M	2	3	6
~ 315	1	2	4
~ 120	1	2	3
~ 30	1	1	1

GRADE	A	B	C
용접 구조물 WELDING (±)			
~ 20M	-	6.0	8.0
~ 15M	-	5.0	7.0
~ 12M	-	4.0	6.0
~ 8M	-	3.0	5.0
~ 4M	0.8	2.0	4.0
~ 2M	0.5	1.2	3.0
~ 1M	0.3	0.8	2.0
~ 315	0.2	0.5	1.2
~ 120	0.15	0.3	0.8
~ 30	0.1	0.2	0.5
3 ~ 6	0.05	0.1	0.2

GRADE	A	B	C
기계 가공품 MACHINING (±)			
규정치않은 일반공차의 GENERAL TOLERANCE	~ 40	2	4
	~ 30	2	3
	~ 10	1	1.5
	< 3	0.5	1
주물 CASTING	~3150	-	7
	~1500	4	5
	~800	3	4
	~400	2	3
	~200	1.5	2
	~100	1	1.5
등급 GRADE	A	B	
주조, 구조물 CASTING (±)			
~ 20M	6	14	24
~ 15M	7	12	21
~ 12M	6	10	18
~ 8M	5	8	14
~ 4M	4	6	11
~ 2M	3	4	8
~ 1M	2	3	6
~ 315	1	2	4
~ 120	1	2	3
~ 30	1	1	1

MEMO

DIM. IN mm	DATE	2011.07.10	APPROVED
SCALE	DRAWN	B.H.KANG	B.J.JONE
1 / 2	DESIGNED	-	
: WMS C 40201	CHECKED	J.Y.LEE	

WOOJIN Industrial Systems Co., Ltd.

DENVER RTD FASTRACKS

TRANSFORMER

R1D1473-25866 A

품번 NO.	부품 번호 PART NO.	품 명 DESCRIPTION	재 질 MATERIAL	수량 Q'TY	중량 W.T	비 고 REMARKS

승인 APP	S.H.PARK 2011.03.25	제작 MAT'L ASSY
검도 CHK	C.Y.LEE 2011.03.17	총중량 G.W 1.2 lbs
설계 DGN	Y.S.JEON 2011.03.11	일반공차 MC WD CT
제도 DRG		B
		SIZE C

명 칭 TITLE: TRANSFORMER

도면 번호 DRG. NO: RES11004CT0 MS Ver. 00 Rev. -D RNE1002

SCALE N/S 매수 SHEET 1 of 1

HYUNDAI Rotem 현대로템주식회사

년-PRJT 정리번호

기호 MARK	일자 DATE	변경 내역 DETAIL OF REVISION(E.C ZONE)	설변번호 E.C NO.	설계 DGN	검도 CHK	승인 APP
Dx1	2012.10.08	The supplier added the default rating.	RNE1002-U144	Y.S.JEON	C.Y.LEE	S.H.PARK
Cx1	2012.03.15	The supplier revised the weight and Dim.		Y.S.JEON	C.Y.LEE	S.H.PARK
Bx1	2012.01.05	The supplier revised painting spec.		Y.S.JEON	C.Y.LEE	S.H.PARK
Ax1	2011.10.25	The supplier revised the drawing for FDR		Y.S.JEON	C.Y.LEE	S.H.PARK

참조번호 REF. NO.

본 도면은 당사 지적재산권(IP)임에 무단복사/배포 금지됨. PROPERTY OF ISSUING ENTITY. CANNOT BE DISTRIBUTED OR REPRODUCED WITHOUT AUTHORIZATION.

CATIA

Hyundai Rotem 254096 2012-10-15 18:28
Hyundai Rotem|10.198.35.77|254096|2012-10-15 18:31:43

TECHNICAL DATA:
1. SENSITIVITY : -44 ±3dB
2. DIRACTIVITY : OMNI DIRECTIONAL
3. IMPEDANCE : 2.2kOhm
4. STANDARD OPERATING VOLTAGE : 1.5 Vdc
5. MAX POERATING VOLTAGE : 10 Vdc
6. CURRENT CONSUMPTION(MAX) : 0.5 mA
7. SIGNAL TO NOISE RATIO(MIN) : 60 dB
8. Weight : 0.1Kg
9. SURFACE TREATMENT
   1) ITEM : NO. 2
      - COLOR : BLACK
      - COLOR CODE : UT-721N TOP N-1.5,G20
      - MAKER : PPG
10. Non-assigned connector should be filled with sealing plug pins.
   (Sealing plug : 10-305045-16,glenair) A

X1 : CONNECTOR PIN ASSIGNMENT
(FRITS4106F14S-07SB0F6)

NO.	ITEM
A	MIC1+
B	MIC1-
C	MIC SHIELD
D	NC.
E	NC.
F	NC.
G	NC.

군번 GROUP NO.					품번 ITEM	품명 DESCRIPTION	사양 SPEC	도면번호 DWG NO.	-	품번일련번호	중량.길이 폭x길이	표면처리 S/TREATMENT
				1	1	MIC	AOM-4544P-2, Projects unlimited					
				1	2	BRACKET	A569, t1.5	R1D000414				PAINTING
				1	3	CONNECTOR	FRITS4106F14S-07SB0F6, GLENAIR					
				1	4	CONNECTOR	FRITS4100F14S-07PB0G1F6, GLENAIR					
				1	5	CABLE GRAND	PG7, DONG-A					
				1	6	NAME LABEL	COTTON PAPER	R1D000452	-	16		
				1	7	MIC CAP	AL(A6061)	R1D000415				Zn PLATING
				1	8	WIRE	100G1121-0.5, Raychem					

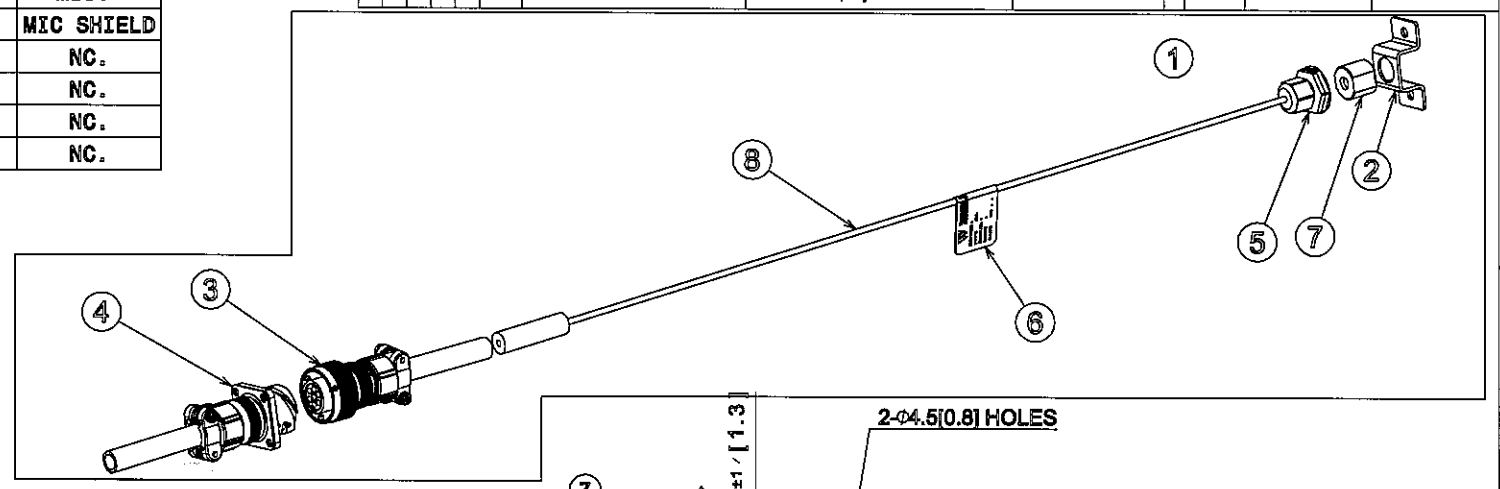

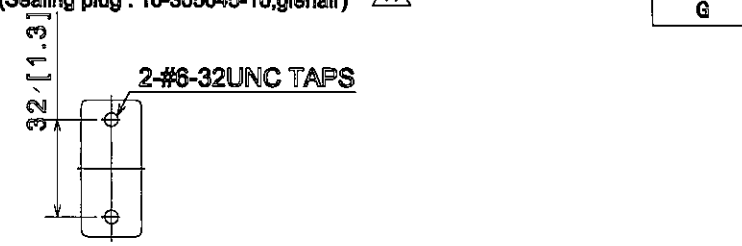

PANEL CUTOUT

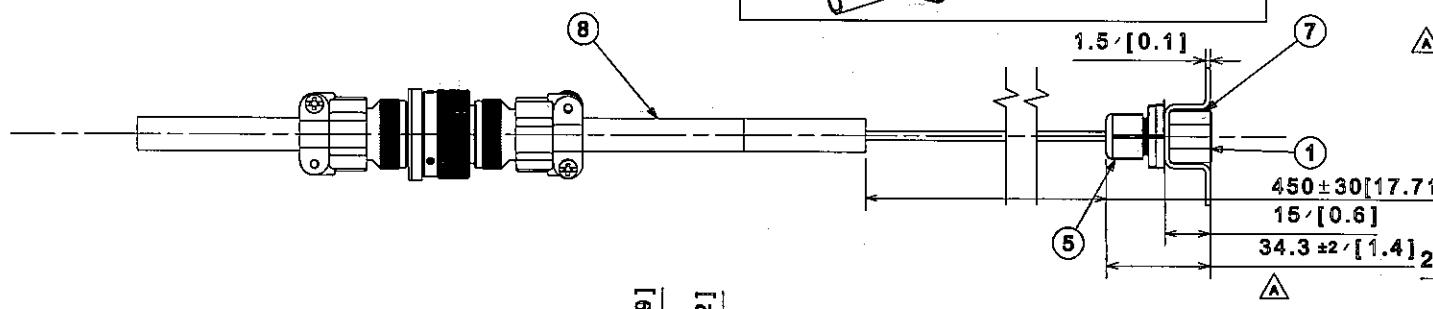

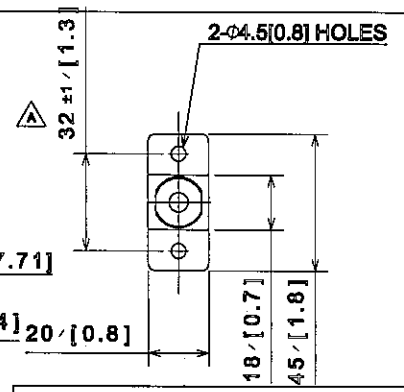

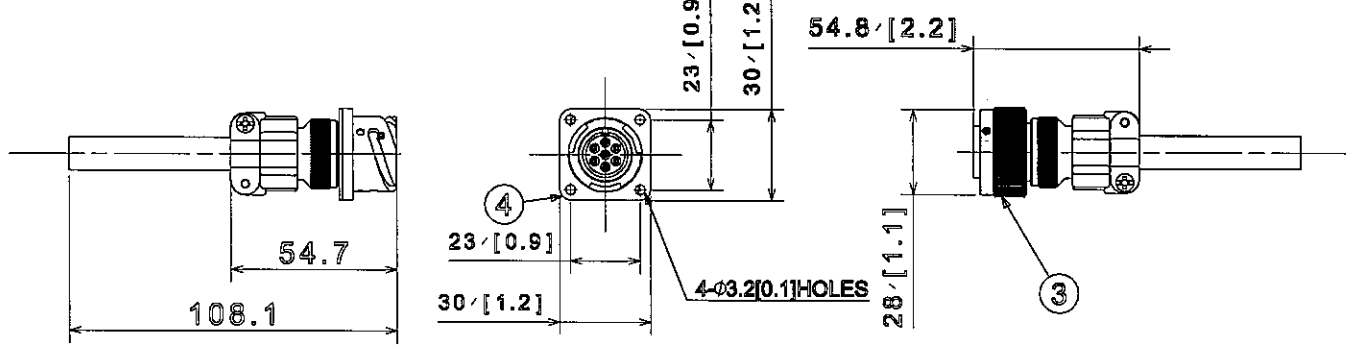

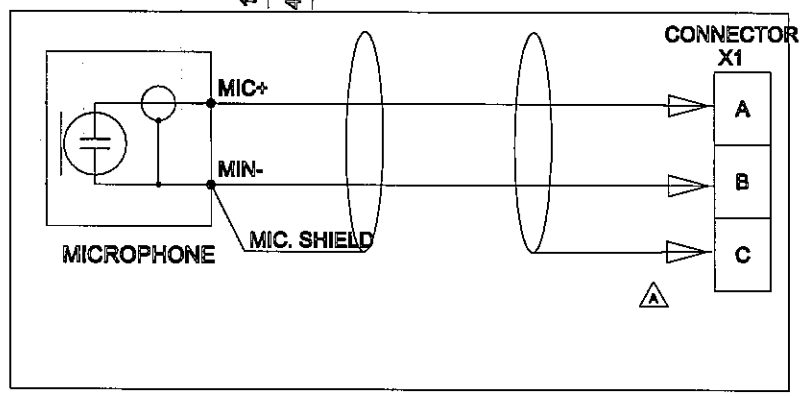

개정 CHANGE			
2012.03.12	1)Wiring corrected. 2)Tolerance added.	KY.JEON	B.J.JONE

GENERAL TOLERANCE (KS B 0401)

DIMENSION	MACHINING	WELDING	CASTING
0.5~3mm	±0.1	±0.3	±0.5
6~30mm	±0.2	±0.5	±0.8
30~120mm	±0.3	±0.8	±1.2
120~315mm	±0.5	±1.2	±2.0
315~1000mm	±0.8	±2.0	±3.0
1000~2000mm	±1.2	±3.0	±4.0
2000~4000mm	±2.0	±4.0	±6.0
4000~8000mm	±3.0	±6.0	±8.0
8000~12000mm	±4.0	±8.0	±12.0
12000~16000mm	±5.0	±10.0	±16.0
16000~20000mm	±6.0	±12.0	±20.0
DIMENSION	CASTING		
~315mm	±0.3		
315~1000mm	±0.5		
1000~2000mm	±0.8		
2000~4000mm	±1.2		
4000~8000mm	±2.0		
8000~12000mm	±3.0		
12000~16000mm	±4.0		
16000~20000mm	±6.0		

두께 THICKNESS	길이 LENGTH	보통급 GRADE	주조 CASTING (±) A	주조 CASTING (±) B
~40	~3150	~20N	2	4
~30	~1600	~15N	2	3
~10	~800	~12N	1	1.5
<3	~400	~8N	0.5	1
	~200	~4N	-	7
	~100	~2N	4	5
		~1N	3	4
		~315	2	3
		~120	1.5	2
		~30	1	1.5

보통급 GRADE	용접 구조물 WELDING (±) A	용접 구조물 WELDING (±) B	용접 구조물 WELDING (±) C
~20N	-	6.0	8.0
~15N	-	5.0	7.0
~12N	-	4.0	6.0
~8N	-	3.0	5.0
~4N	0.8	2.0	4.0
~2N	0.5	1.2	3.0
~1N	0.3	0.8	2.0
~315	0.2	0.5	1.2
~120	0.15	0.3	0.8
~30	0.1	0.2	0.5
3~6	0.05	0.1	0.2

등급 GRADE	기계 가공품 MACHINING (±) A	기계 가공품 MACHINING (±) B	기계 가공품 MACHINING (±) C
규정치않은 일반공차표 GENERAL TOLERANCE			

설계MEMO

DIM. IN mm | 척도 SCALE 1 / 1 | 공차 적용기준 : WMS C 40201

WOOJIN Industrial Systems Co., Ltd.

작성일 DATE	2011.10.07	승인 APPROVED	B.J.JONE
작성 DRAWN	B.H.KANG		
설계 DESIGNED	-		
검토 CHECKED	J.Y.LEE		

DENVER RTD FASTRACKS

ANS MICROPHONE

R1D1473-25864 | A

품번 NO.	부품 번호 PART NO.	품명 DESCRIPTION	재질 MATERIAL	수량 Q'TY	중량 W.T	비고 REMARKS
승인 APP	S.H.PARK 2011.03.25	재질 MAT'L ASSY				
검토 CHK	C.Y.LEE 2011.03.17	총중량 G.W 0.2 lbs				
설계 DGN	Y.S.JEON 2011.03.11	일반공차 MC B / WD / CT				
제도 DRG		SIZE C				

명칭 TITLE: ANS MICROPHONE ASSY

도면번호 DRG. NO: RES11005CT0 | MS | Ver. 00 | Rev. -C | RNE1002

SCALE N/S | 매수 SHEET 1 of 1

참조번호 REF. NO.

HYUNDAI Rotem 현대로템주식회사

MARK	DATE	DETAIL OF REVISION(E.C ZONE)	설변번호 E.C NO.	설계 DGN	검도 CHK	승인 APP
Cx1	2012.03.15	The supplier revised the weight and Dim.	RNE1002-U090	Y.S.JEON	C.Y.LEE	S.H.PARK
Bx1	2012.01.05	The supplier revised painting spec.		Y.S.JEON	C.Y.LEE	S.H.PARK
Ax1	2011.10.25	The supplier revised the drawing for FDR		Y.S.JEON	C.Y.LEE	S.H.PARK

본 도면은 당사 재산으로서 허락없이 무단복사/배포 금지됨. PROPERTY OF ISSUING ENTITY. CANNOT BE DISTRIBUTED OR REPRODUCED WITHOUT AUTHORIZATION.

CATIA

Hyundai Rotem 254096 2012-05-14 12:35
Hyundai Rotem|10.196.33.77|254096|2012-11-15 18:44:39

NOTE

1. WEIGHT : 11.0kg
2. NON-ASSIGNED CONNECTOR SOCKETS/PINS SHOULD BE FILLED WITH SEALING PLUG. (SEALING PLUG : 10-3050456-16, GLENAIR)

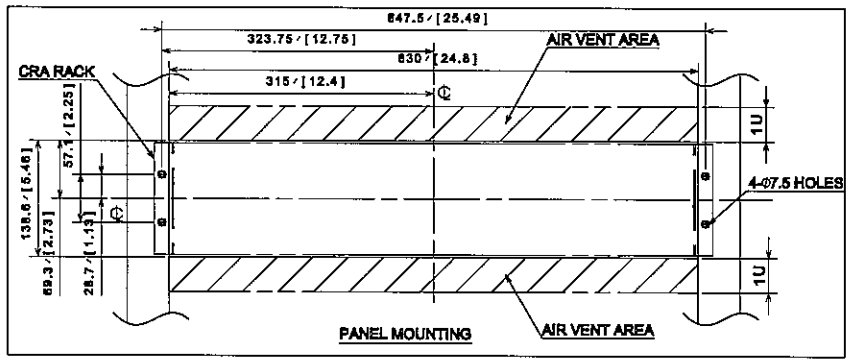

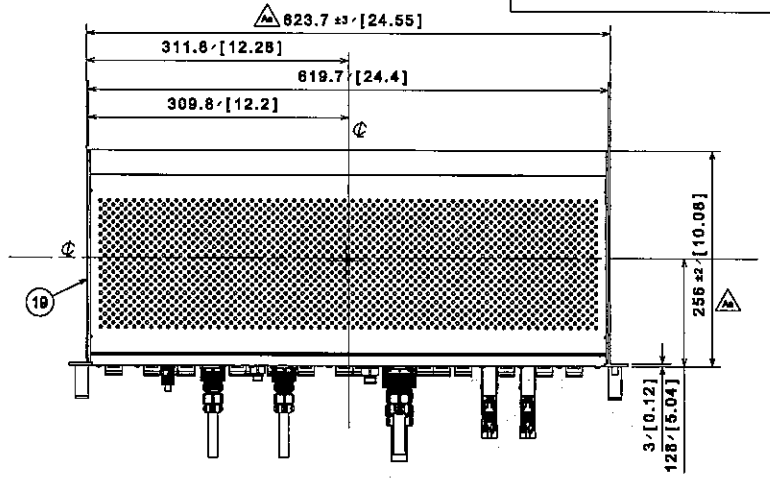

TOP VIEW
S=1:5

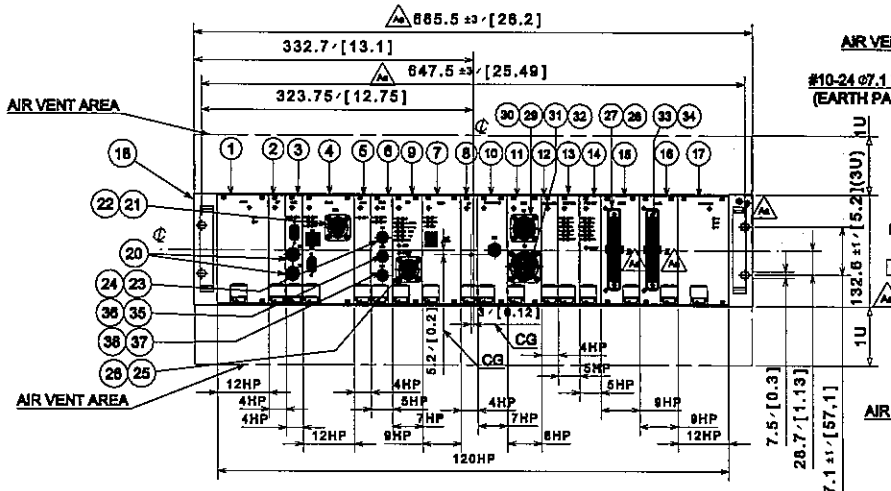

FRONT VIEW
S=1:5

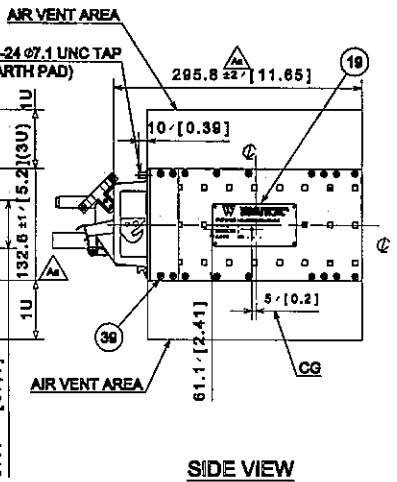

SIDE VIEW
S=1:5

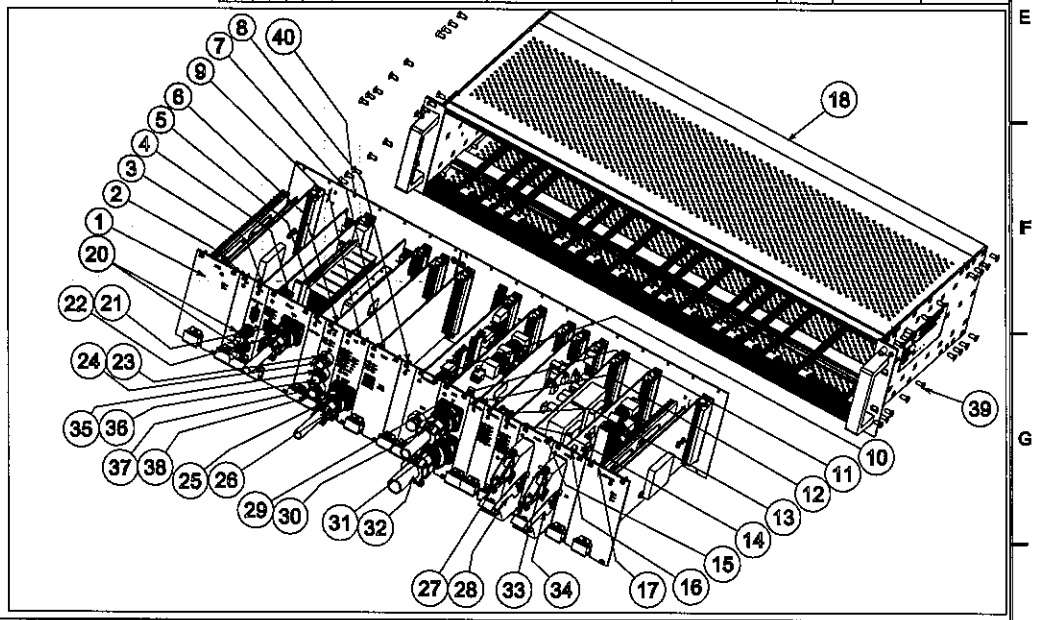

군번 GROUP NO.				품번 ITEM		품 명 DESCRIPTION	사 양 SPEC	도면번호 DWG NO.	-	품번 및 단면	열량, 깊이 폭x길이	표면처리 도금, 도장색
			1	1		POWER SUPPLY	PWR,VICOR	R1D000285				
			1	2		SP(DEBUG 4HP)	SP,W18	R1D000290				
			1	3		VIDEO TX BOARD	VTX,W18	R1D000864				
			1	4		CNCB BOARD	CNCB,W18	R1D000245				
			1	5		HARD DISK DRIVE ASSY	HDD,W18	R1D000298				
			1	6		WLR BOARD	WLR,W18	R1D000808				
			1	7		VOIP	VOIP,W18	R1D000800				
			1	8		REC	REC,W18	R1D000286				
			1	9		LIC BOARD	LIC,W18	R1D000282				
			1	10		PAC 486 BOARD	PAC486,W18	R1D000280				
			1	11		SCB BOARD	SCB,W18	R1D000282				
			1	12		MCU BOARD	MCU,W18	R1D000274				
			1	13		VOL	VOL,W18	R1D000276				
			1	14		INT BOARD	INT,W18	R1D000270				
			1	15		AAB1 BOARD	AAB1,W18	R1D000242				
			1	16		AAB2 BOARD	AAB2,W18	R1D000245				
			1	17		AAB POWER BOARD	AAB PWR,VICOR	R1D000249				
			1	18		21" RACK MOUNT CHASSIS ASSY	SCHROFF,120HP, W18	R1D000287				
			2	19		NAME PLATE	AL	R1D000462	-	1		
			1	20		X6,X7 CONNECTOR	BCP-CEFA, CANARE					
			1	21		X15 CONNECTOR	FNTB41[illegible]					
			1	22		X16 CONNECTOR	FNTB41[illegible]					
			1	23		X9 CONNECTOR	801-010-07M17-36PA/GLENAIR					
			1	24		X8 CONNECTOR	801-007-16M17-35SA/GLENAIR					
			1	25		X3 CONNECTOR	FNTB41[illegible]					
			1	26		X3 CONNECTOR	FNTB41[illegible]					
			1	27		X4 CONNECTOR	M[illegible]/111/BOURNAU					
			1	28		X4 CONNECTOR	M[illegible]/BOURNAU					
			1	29		X1 CONNECTOR	FNTB41[illegible]					
			1	30		X1 CONNECTOR	FNTB41[illegible]					
			1	31		X2 CONNECTOR	FNTB41[illegible]					
			1	32		X2 CONNECTOR	FNTB41[illegible]					
			1	33		X5 CONNECTOR	M[illegible]/111/BOURNAU					
			1	34		X5 CONNECTOR	M[illegible]/BOURNAU					
			1	35		X10 CONNECTOR	801-010-07M17-36PB/GLENAIR					
			1	36		X10 CONNECTOR	801-007-16M17-35SB/GLENAIR					
			1	37		X11 CONNECTOR	801-010-07M17-36PC/GLENAIR					
			1	38		X11 CONNECTOR	801-007-16M17-35SC/GLENAIR					
			32	39		BOLT	FLAT HEAD SCREW M[illegible]					
			1	40		BACK PLANE	A997,W18	R1D001044				

개정 CHANGE			
1Title modified. 2Pin mark added. 3Connector No. corrected. 4Add 3U. 5Connector No. corrected.	2011.09.26	B.J.JONE	B.J.JONE

GENERAL TOLERANCE (WMS-C-40201)

설계MEMO				
DIM. IN mm	작성일 DATE	2011.09.26	승인 APPROVED	B.J.JONE
척도 SCALE	작성 DRAWN	B.H.KANG		
1 / 5	설계 DESIGNED	-		
공차 적용기준 : WMS C 40201	검토 CHECKED	J.Y.LEE		

WOOJIN Industrial Systems Co., Ltd.

DENVER RTD FASTRACKS

COMMUNICATIONS RACK-A 1/2

R1D1473-25838 Aa

품번 NO.	부품 번호 PART NO.	품 명 DESCRIPTION	재 질 MATERIAL	수량 Q'TY	중량 W.T	비 고 REMARKS

승인 APP	S.H.PARK 2011.03.25	재질 MAT'L ASSY	명 칭 TITLE: COMMUNICATION RACK A
검도 CHK	C.Y.LEE 2011.03.17	총중량 G.W 25.1 lbs	
설계 DGN	Y.S.JEON 2011.03.11	일반공차 MC VD CT: B	도면 번호 DRG. NO: RES13001CT0 MS; Ver. 00 Rev. -C
제도 DRG		SIZE C	SCALE N/S; 매수 SHEET 1 of 2

참조번호 REF. NO.

HYUNDAI Rotem 현대로템주식회사

RNE1002

기호 MARK	일자 DATE	변경내역 DETAIL OF REVISION(E.C ZONE)	설변번호 E.C NO.	설계 DGN	검도 CHK	승인 APP
Cx1	2012.03.15	The supplier revised the weight and Dim.	RNE1002-U090	Y.S.JEON	C.Y.LEE	S.H.PARK
Bx1	2012.01.05	The supplier revised the drawing format.		Y.S.JEON	C.Y.LEE	S.H.PARK
Ax1	2011.10.25	The supplier revised the drawing for FDR		Y.S.JEON	C.Y.LEE	S.H.PARK

규격			
치수 SIZE	~ 40	2	4
	~ 30	2	3
	~ 10	1	1.5
	< 3	0.5	1
길이 LENGTH	~3150	-	7
	~1600	4	5
	~ 800	3	4
	~ 400	2	3
	~ 200	1.5	2
	~ 100	1	1.5
등급 GRADE		A	B
주조, 주강품 CASTING (±)			
	~ 20M	8	14	24
	~ 15M	7	12	21
	~ 12M	6	10	18
	~ 8M	5	8	14
	~ 4M	4	6	11
	~ 2M	3	4	8
	~ 1M	2	3	6
	~ 315	1	2	4
	~ 120	1	2	3
	~ 30	1	1	1
등급 GRADE		A	B	C
용접 구조물 WELDING (±)				
	~ 20M	-	6.0	8.0
	~ 15M	-	5.0	7.0
	~ 12M	-	4.0	6.0
	~ 8M	-	3.0	5.0
	~ 4M	0.8	2.0	4.0
	~ 2M	0.5	1.2	3.0
	~ 1M	0.3	0.8	2.0
	~ 315	0.2	0.5	1.2
	~ 120	0.15	0.3	0.8
	~ 30	0.1	0.2	0.5
	3~6	0.05	0.1	0.2
등급 GRADE		A	B	C
기계 가공품 MACHINING (±)				
규정치않은 일반공차표 GENERAL TOLERANCE				

Hyundai Rotem 254096 2012-05-14 12:35
Hyundai Rotem|10.196.33.77|254096|2012-05-15 18:45:10
본 도면은 당사 재산으로서 허가없이 무단복사/배포 금지됨. PROPERTY OF ISSUING ENTITY. CANNOT BE DISTRIBUTED OR REPRODUCED WITHOUT AUTHORIZATION.

CATIA

본-PRJT

접리번호

군번 GROUP NO.	품번 ITEM	품 명 DESCRIPTION	사 양 SPEC	도면번호 DWG NO.	품번 및 군번	중량.길이 WEIGHT	표면처리 SURFACE TREATMENT
1							

X1:PIN ASSIGNMENT [FRITS4102R16S-1PB0G1F6]

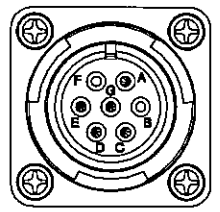

NO.	X1
A	POWER-VCC
B	NC
C	ADD1
D	ADD2
E	POWER-GND
F	NC
G	ADD-GND

X2:PIN ASSIGNMENT [FRITS4102R20-29PB0G1F6]

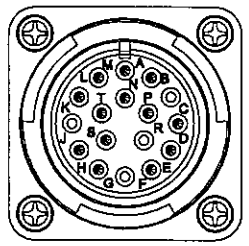

NO.	ITEM
A	FORWARD+
B	ALL DOOR CLOSED+
C	NC
D	CAB KEY ON+
E	KEY GND
F	CONDUCT KEY ON+
G	NC
H	ODOMETER-
J	ODOMETER+
K	NC
L	~~EMB VCC(24V)~~ NC
M	~~EMB VCC GND~~ NC
N	REVERSE+
P	GND
R	NC
S	UNCOUPLE+
T	~~NC~~ CRA fault 37.5V

X3:PIN ASSIGNMENT [FRITS4102R14S-07PB0G1F6]

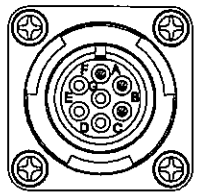

NO.	X3
A	N1+
B	N1-
C	N1 SHIELD
D	NC.
E	NC.
F	NC.
G	NC.

X5 ~~X4~~:PIN ASSIGNMENT [MSG59RR-L111]

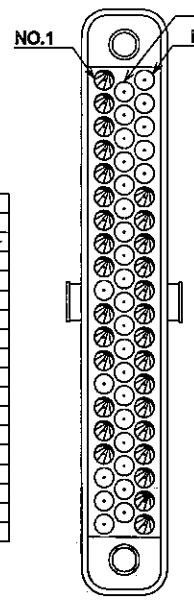

NO.	ITEM	NO.	ITEM
1	PEI LIVE-ADD GND	31	
2	PEI1 LIVE-ADD	32	
3	PEI2 LIVE-ADD	33	
4	PEI3 LIVE-ADD	34	
5	PEI4 LIVE-ADD	35	
6	~~PEI5 LIVE-ADD~~ CAB KEY ON CRA	36	
7	~~PEI6 LIVE-ADD~~ CAB KEY ON CRB	37	
8	~~PEI7 LIVE-ADD~~ UNCOUPLE CRA	38	
9	~~PEI8 LIVE-ADD~~ UNCOUPLE CRB	39	
10		40	ARr 37.5V
11	DPO LIVE-ADD1	41	
12	DPO LIVE-ADD2	42	
13	DPO LIVE-ADD GND	43	
14		44	
15	DPH LIVE-ADD1	45	AUDIO1 SH
16	DPH LIVE-ADD2	46	AUDIO1+
17	DPH LIVE-ADD GND	47	AUDIO1-
18		48	AUDIO2 SH
19		49	AUDIO2+
20		50	AUDIO2-
21		51	AUDIO3 SH
22		52	AUDIO3+
23		53	AUDIO3-
24		54	AUDIO4 SH
25		55	AUDIO4+
26		56	AUDIO4-
27		57	AUDIO5 SH
28		58	AUDIO5+
29		59	AUDIO5-
30			

X4 ~~X5~~:PIN ASSIGNMENT [MSG59RR-L111]

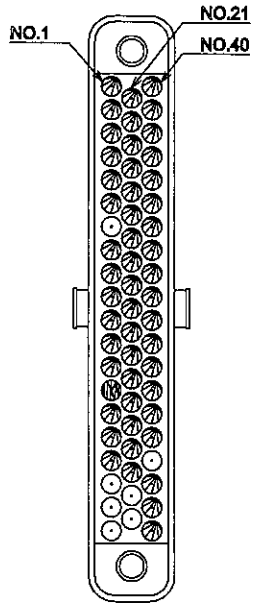

NO.	ITEM	NO.	ITEM
1	PA AUDIO TL1+	31	PA ContorDI1 TL2
2	PA AUDIO TL1-	32	PA ContorDI2 TL2
3	PA AUDIO TL SH	33	PA ContorDI3 TL2
4	PA AUDIO TL2+	34	PA ContorDI SH TL2
5	PA AUDIO TL2-	35	PA AUDIO+
6	PA AUDIO TL2 SH	36	PA AUDIO-
7		37	PA AUDIO SH
8	PEI AUDIO TL1 RX+	38	
9	PEI AUDIO TL1 RX-	39	
10	PEI AUDIO TL1 SH	40	PEI AUDIO RX+
11	PEI AUDIO TL1 TX+	41	PEI AUDIO RX-
12	PEI AUDIO TL1 TX-	42	PEI AUDIO SH
13	PEI AUDIO TL2 RX+	43	PEI AUDIO TX+
14	PEI AUDIO TL2 RX-	44	PEI AUDIO TX-
15	PEI AUDIO TL2 SH	45	DUAL TONE +
16	PEI AUDIO TL2 TX+	46	DUAL TONE -
17	PEI AUDIO TL2 TX-	47	DUAL TONE SH
18		48	ANSN +
19		49	ANSN -
20		50	ANSN SH
21	DUAL TONE TL1+	51	OCC AUDIO RX+
22	DUAL TONE TL1-	52	OCC AUDIO RX-
23	DUAL TONE TL1 SH	53	OCC AUDIO SH
24	DUAL TONE TL2+	54	OCC AUDIO TX+
25	DUAL TONE TL2-	55	OCC AUDIO TX-
26	DUAL TONE TL2 SH	56	
27	PA ContorDI1 TL1	57	~~EMB MIC+~~
28	PA ContorDI2 TL1	58	~~EMB MIC-~~
29	PA ContorDI3 TL1	59	~~EMB SHIELD~~
30	PA ContorDI SH TL1		

X15:PIN ASSIGNMENT [FRITS4102R14S-07PB0G1F6]

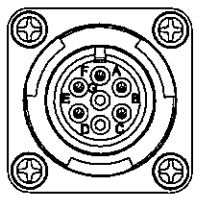

NO.	X15
A	TD
B	RD
C	SHIELD
D	NC.
E	~~DC +5V OUT NC~~
F	~~DC GND OUT NC~~
G	NC.

X9:PIN ASSIGNMENT [801-010-07M7-25PA]

NO.	ITEM
A	RX+
B	RX-
C	TX+
D	TX-
E	GND

X10:PIN ASSIGNMENT [801-010-07M7-25PB]

NO.	ITEM
A	RX+
B	RX-
C	TX+
D	TX-
E	GND

X11:PIN ASSIGNMENT [801-010-07M7-25PC]

NO.	ITEM
A	RX+
B	RX-
C	TX+
D	TX-
E	GND

X6/X7 : BNC CONNECTOR

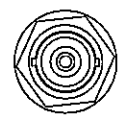

PIN NO.	REMARK
CENTER	VIDEO OUT
SHIELD	GND

X16:PIN ASSIGNMENT [801-009-07M9-210PA]

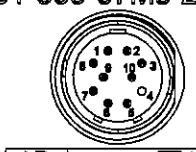

NO.	ITEM
1	TX1+
2	TX1-
3	TX1 SH
4	
5	RS485 TL1+
6	RS485 TL1-
7	RS485 TL SH
8	RS485 TL2+
9	RS485 TL2-
10	RS485 TL2 SH

개정 CHANGE			
1)Connector No. revised. 2)X15 pin assignment changed. 3)X2 pin assignment changed. 4)X4&X5 pin assignment changed. 2012.03.12	H.Y.KIM	B.J.JONE	Aa

GENERAL TOLERANCE (WMS-C-40201)

설계MEMO

공차 적용기준 : WMS C 40201

DIM. IN mm	작성일 DATE	2011.10.07	승인 APPROVED
척도 SCALE	작성 DRAWN	B.H.KANG	B.J.JONE
1 / 1	설계 DESIGNED	-	
	검토 CHECKED	J.Y.LEE	

WOOJIN Industrial Systems Co., Ltd.

DENVER RTD FASTRACKS

COMMUNICATION RACK-A 2/2

R1D1473-25838 Aa

품번 NO.	부품 번호 PART NO.	품 명 DESCRIPTION	재 질 MATERIAL	수량 Q'TY	중량 W.T	비 고 REMARKS

승인 APP	S.H.PARK 2011.03.25	재질 MAT'L ASSY	명 칭 TITLE: COMMUNICATION RACK A
검도 CHK	C.Y.LEE 2011.03.17	총중량 G.W 25.1 lbs	
설계 DGN	Y.S.JEON 2011.03.11	일반공차 MC WD CT: B	도면 번호 DRG. NO: RES13001CT0 MS; Ver. 00 Rev. -C
제도 DRG		SIZE C	SCALE N/S; 매수 SHEET 2 of 2

참고번호 REF. NO.

HYUNDAI Rotem 현대로템주식회사

RNE1002 / 본-PRJT / 정리번호

기호 MARK	일자 DATE	변경내역 DETAIL OF REVISION(E.C ZONE)	설변번호 E.C NO.	설계 DGN	검도 CHK	승인 APP
Cx1	2012.03.15	The supplier corrected Connector Number.	RNE1002-U050	Y.S.JEON	C.Y.LEE	S.H.PARK
Bx1	2012.01.05	The supplier revised the drawing format.		Y.S.JEON	C.Y.LEE	S.H.PARK
Ax1	2011.10.25	The supplier revised the drawing for FDR		Y.S.JEON	C.Y.LEE	S.H.PARK

주조 CASTING			
	~ 40	2	4
	~ 30	2	3
	~ 10	1	1.5
	< 3	0.5	1
프레스 PRESSING	~3150	-	7
	~1600	4	5
	~ 800	3	4
	~ 400	2	3
	~ 200	1.5	2
	~ 100	1	1.5
등급 GRADE		A	B
주물, 주강품 CASTING (±)			
~20N	8	14	24
~15N	7	12	21
~12N	6	10	18
~ 8N	5	8	14
~ 4N	4	6	11
~ 2N	3	4	8
~ 1N	2	3	6
~315	1	2	4
~120	1	2	3
~ 30	1	1	1
등급 GRADE	A	B	C
용접 구조물 WELDING (±)			
~20N	-	6.0	8.0
~15N	-	5.0	7.0
~12N	-	4.0	6.0
~ 8N	-	3.0	5.0
~ 4N	0.6	2.0	4.0
~ 2N	0.5	1.2	3.0
~ 1N	0.3	0.8	2.0
~315	0.2	0.5	1.2
~120	0.15	0.3	0.8
~ 30	0.1	0.2	0.5
3~6	0.05	0.1	0.2
등급 GRADE	A	B	C
기계 가공품 MACHINING (±)			
규정치않은 일반공차표 GENERAL TOLERANCE			

Hyundai Rotem 254096 2012-05-14 12:35
Hyundai Rotem|10.198.33.77|254096|2012-05-15 18:46:12
본 도면은 당사 지식소유권 보호법에 의한 무단복사/배포 금지됨. PROPERTY OF ISSUING ENTITY. CANNOT BE DISTRIBUTED OR REPRODUCED WITHOUT AUTHORIZATION.
CAT1A

NOTE.
1. Non-assigned connector should be filled with plug & socket pins.

TECHNICAL DATA:

1. OPERATING VOLTAGE : DC 24 ~ 48V
2. CURRENT CONSUMPTION : 1A
3. INTERFACE : RS 485
4. COLOR FRONT FRAME : RAL 9005 (BLACK)
5. DISPLAY : SAMSUNG - LMS700KF05(7")
6. NUMBER OF PIXELS : 800x480
7. ACTIVE AREA : 152.4mm[6"] x 91.4mm[3.6"]
8. COLORS : 262k
9. BRIGHTNESS : 450cd/m
10. CONTRAST RATIO : 250 : 1
11. WEIGHT : ~~1.6kg~~ 2.0kg Aa
12. SURFACE TREATMENT
    1) ITEM : NO.1,2,3,4
    - COLOR : BLACK
    - COLOR CODE : UT-721N TOP N-1.5,G20
    - MAKER : PPG

BOLT TYPE DESCRIPTION

(11) — Item no.

NO.	TYPE	SIZE	Q'TY
11-1	FLAT HEAD BOLT	M8XL6	16
11-2	ROUND HEAD BOLT	M8XL8	4
	SPRING WASHER	M8X≠8Xt0.8	
	FLAT WASHER	M8X≠8.5Xt0.5	
11-3	ROUND HEAD BOLT	M8XL14	8
	SPRING WASHER	M8X≠8Xt0.8	4
	FLAT WASHER	M8X≠8.5Xt0.5	
11-4	ROUND HEAD BOLT	M8XL10	6
	SPRING WASHER	M8X≠8Xt0.8	
	FLAT WASHER	M8X≠8.5Xt0.5	
	~~FLAT WASHER~~	~~M8X≠7.5Xt0.5~~	
11-5	NUT	M8	
	SPRING WASHER	M8X≠8Xt0.8	
	FLAT WASHER	M8X≠8.5Xt0.5	

X1: CONNECTOR PIN ASSIGMENT
[ITH03FPA22-14PB0G1F6]

NO	ITEM
A	POWER VCC
B	NC
C	POWER GND
D	NC
E	TX1+(in)
F	TX1-(in)
G	TX1 SH(in)
H	NC
J	NC
K	NC
L	NC
M	CAB ON+
N	CONDUCTOR KEY ON+
P	DI GND
R	NC
S	NC
T	ADD 1
U	ADD 2
V	ADD GND

군번 GROUP NO.					품번 ITEM	품 명 DESCRIPTION	사 양 SPEC	도면번호 DWG NO.	-	품번 및 군번	중량 . 길이 폭 x 길이	표면처리 S/TREATMENT
				1	1	FRONT PANEL	AL(A6061)	R1D000315				PAINTING
				1	2	UPPER COVER	A591-CQ, t1	R1D000316				PAINTING
				1	3	REAR COVER	A591-CQ, t1.6	R1D000455				PAINTING
				1	4	FRAME	A366-91,t=1.0	R1D000454				PAINTING
				1	5	TFT-LCD UNIT	LMS700KF05, SAMSUNG					
				1	6	POWER CONVERTER BOARD	CCP-PCB 12V50W, WIS	R1D000316				
				1	7	CCP CONTROL BOARD	CCP-CB, WIS	R1D000313				
				1	8	CONNECTOR	ITH03FPA22-14PB0G1F6 /GLENAIR					
				1	9	CONNECTOR	ITH08F22-14SB0F6 /GLENAIR					
				1	10	NAME PLATE	AL, t=1	R1D000452	-	02		
				1	11	BOLT & NUT LIST	ASS'Y					
				2	12	WIRE MESH	DUST FILTER #25, MYUNG-JIN ELECTRONICS					
				4	13	EMC TAPE	SF050010R-C-NA-A,E-Song					
				1	14	TOUCH SCREEN UNIT	MN070000ACD, 7" Wide, CAZMUS					
				1	15	SPEAKER	HSP-1710-8, HANICS TECHNOLOGY					
				1	16	D/L BOARD	ASS'Y	R1D000314				
				1	17	CR FORM SHEET	CR FORM,EPDM,t=2.0	R1D000453				
				1	18	LCD BRACKET	A366-91,t=1.0	R1D000460				Zn PLATING
				1	19	CAPTIVE SCREW	F5-M4-P2,SOUTHCO					

EMC TAPE LENGTH DESCRIPTION

(13)-341mm — LENGTH — ITEM NO.

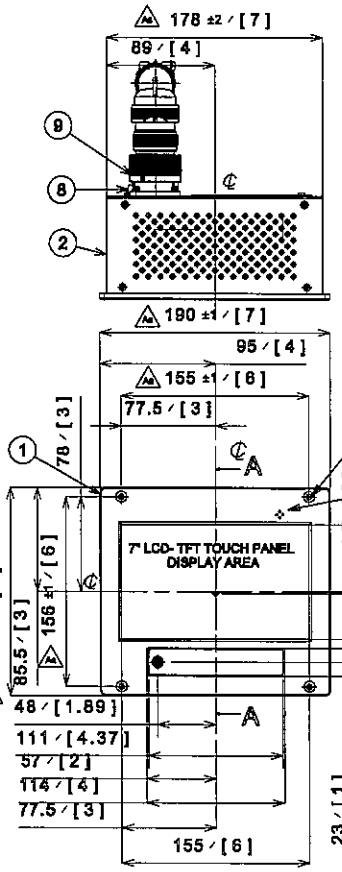

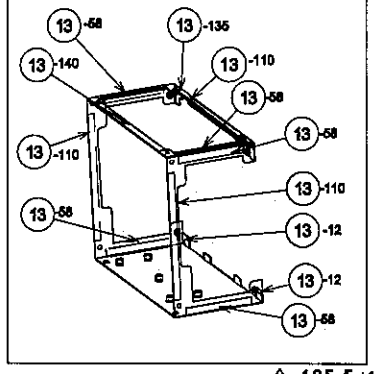

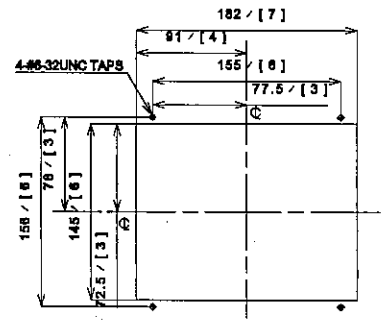

CUTOUT FOR INSTALLATION

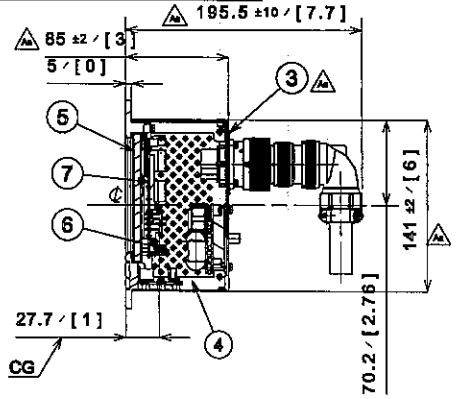

Section view A-A

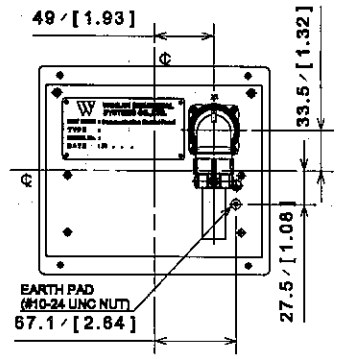

Auxiliary view B
Scale: 1:5

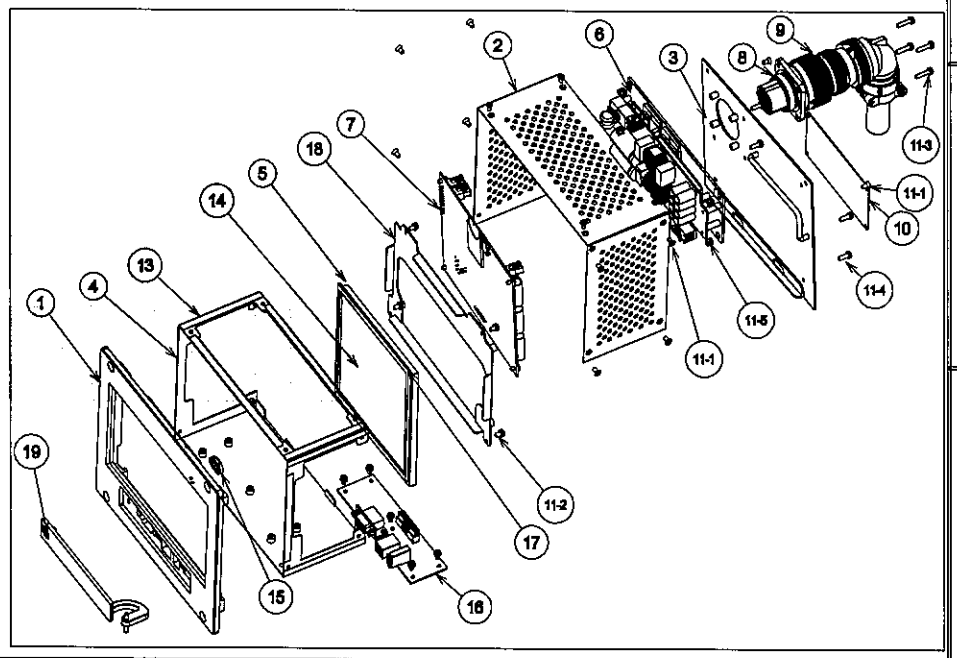

등급 GRADE	A	B	C
용접 구조물 WELDING	(±)		
~20M	-	6.0	6.0
~15M	-	5.0	7.0
~12M	-	4.0	6.0
~8M	-	3.0	5.0
~4M	0.8	2.0	4.0
~2M	0.5	1.2	3.0
~1M	0.3	0.8	2.0
~315	0.2	0.5	1.2
~120	0.15	0.3	0.8
~30	0.1	0.2	0.5
3~6	0.05	0.1	0.2
등급 GRADE	A	B	C
기계 가공품 MACHINING	(±)		
구조물은 일반공차표 GENERAL TOLERANCE			

등급 GRADE	A	B
주물, 주강품 CASTING	(±)	
~20M	8	14	24
~15M	7	12	21
~12M	6	10	18
~8M	5	8	14
~4M	4	6	11
~2M	3	4	8
~1M	2	3	6
~315	1	2	4
~120	1	2	3
~30	1	1	1

개정 CHANGE

1)Weight changed. 2)EMC gasket length changed. 3)Bolt QTY changed. 4) P/No.3 corrected. 5)Tolerance added.	2012.03.12	H.Y.SHIN	B.J.JONE

GENERAL TOLERANCE (WMS-C-A0201)

설계MEMO

공차 적용기준 : WMS C 40201

DIM. IN mm	작성일 DATE	2011.10.07	승인 APPROVED
척도 SCALE	작성 DRAWN	B.H.KANG	B.J.JONE
1 / 5	설계 DESIGNED	-	
	검토 CHECKED	J.Y.LEE	

WOOJIN Industrial Systems Co., Ltd.

DENVER RTD FASTRACKS

COMMUNICATION CONTROL PANEL

R1D1473-25842 Aa

Cxl	2012.03.15	The supplier revised the weight and Dim.	RNE1002-U090	Y.S. JEON	C.Y. LEE	S.H.PARK
Bxl	2012.01.05	The supplier revised painting spec.		Y.S. JEON	C.Y. LEE	S.H.PARK
Axl	2011.10.25	The supplier revised the drawing for FDR		Y.S. JEON	C.Y. LEE	S.H.PARK
기 호 MARK	일 자 DATE	변 경 내 역 DETAIL OF REVISION(E.C ZONE)	설변번호 E.C NO.	설계 DGN	검도 CHK	승인 APP

품번 NO.	부품 번호 PART NO.	품 명 DESCRIPTION	재 질 MATERIAL	수량 Q'TY	중량 W.T	비 고 REMARKS
승인 APP	S.H.PARK 2011.03.25	재질 MAT'L ASSY				
검도 CHK	C.H.LEE 2011.03.17	총중량 G.W 4.3 lbs				
설계 DGN	Y.S. JEON 2011.03.11	일 반 공 차 MC WD CT				
제도 DRG		B SIZE C				

명 칭 TITLE: COMMUNICATION CONTROL PANEL

도면 번호 DRG. NO: RES13003CT0 MS — Ver. 00 Rev. -C

SCALE N/S 매수 SHEET 1 of 1

참조번호 REF. NO.

HYUNDAI Rotem 현대로템주식회사

RNE1002 본-PRJT 정리번호

본 도면은 당사 재산으로서 허락없이 무단복사/배포 금지됨 - PROPERTY OF ISSUING ENTITY. CANNOT BE DISTRIBUTED OR REPRODUCED WITHOUT AUTHORIZATION.

CATIA

Hyundai Rotem 254096 2012-05-14 12:35
Hyundai Rotem|10.196.33.77|254096|2012-05-15 18:47:01

NOTE.

1. BOLT TYPE DESCRIPSION

(17) — Item no.

2. EMC TAPE LENGTH DESCRIPTION

(18)-341mm — Length; Item no.

3. Non-assigned connector should be filled with plug & socket pins.

TECHNICAL DATA :

1. SPEAKER
   1) IMPEDANCE : 8ohm ±15%
   2) POWER RATING : 3W (MAX.6W)
   3) SOUND PRESSURE LEVEL : [illegible] ± 3dB
   4) RESONANCE FREQUENCY : [illegible]±20%
   5) FREQUENCY RANGE : 0~[illegible]Hz F0~15kHz
2. WEIGHT : 4kg
3. SURFACE TREATMENT
   1) ITEM : NO.1,2,13,16
      - COLOR : BLACK
      - COLOR CODE : UT-721N TOP N-1.5,G20
      - MAKER : PPG

NO.	TYPE	SIZE	Q'TY
17-1	FLAT HEAD BOLT	M3XL8	14 18
17-2	ROUND HEAD BOLT	M3XL8	12
	SPRING WASHER	M3X_5Xt0.8	
	FLAT WASHER	M3X#5.5Xt0.5	
17-3	NUT	M4	4
	SPRING WASHER	M4X#8.5Xt1.0	
	FLAT WASHER	M4X#7.5Xt0.8	

X2: PIN ASSIGNMENT
[ITH06F18-19SB0F6]

NO.	ITEM
A	PA1+(in)
B	PA1-(in)
C	PA1 SH(in)
D	
E	
F	
G	
H	G SIG SH
J	G SIG+
K	G SIG-

X1: PIN ASSIGNMENT
[ITH03FPA28-21PB0G1F6]

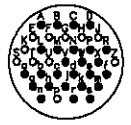

NO	ITEM	NO	ITEM
A	POWER1-VBB	a	GND SH+
B	POWER1-GND	b	GND SH-
C	LIVE	c	GND SH
D	LIVE AND SH(in)	d	GND TX+
E		e	GND TX-
F		f	G-SH+
G		g	MUTE+
H		h	MUTE-
J		i	G-SH-
K		k	PRE+
L	PEI RX+(in)	m	PRE-
M	PEI RX-(in)	n	PRE SH
N	PEI RX (in)	p	
P	PEI TX+(in)	r	POWER VBB(SPK)
R	PEI TX-(in)	s	POWER GND(SPK)
S			
T			
U			
V	BAL TONE+(in)		
W	BAL TONE-(in)		
X	BAL TONE SH(in)		

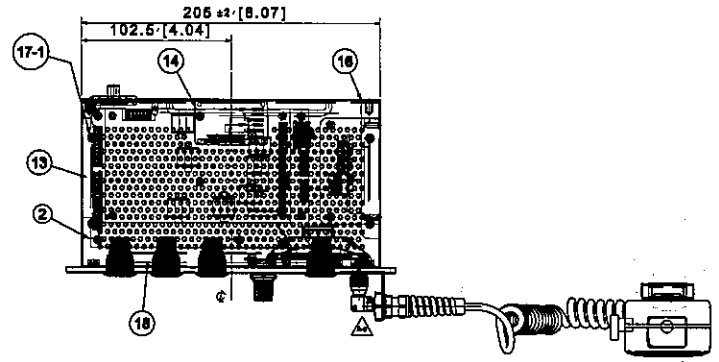

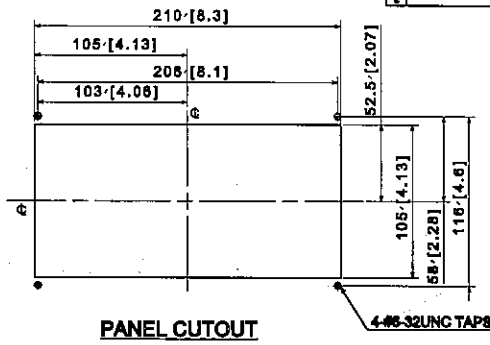

PANEL CUTOUT

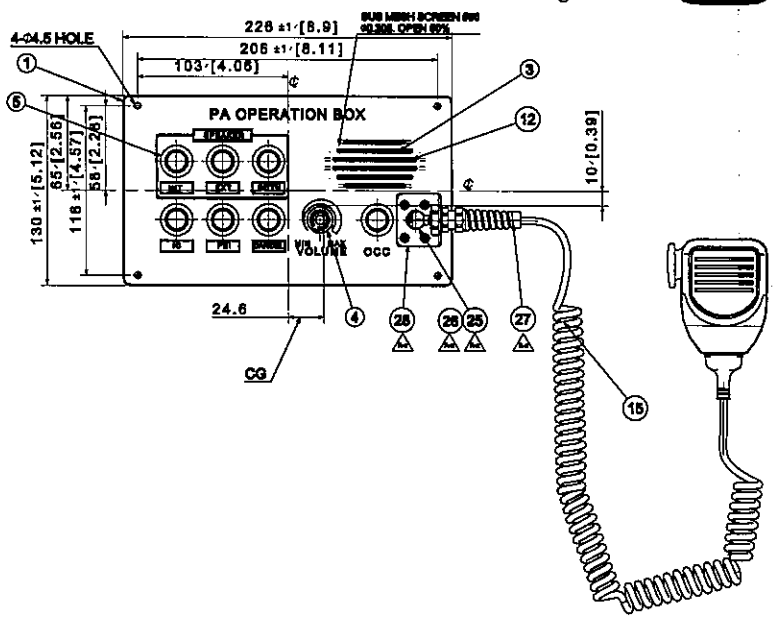

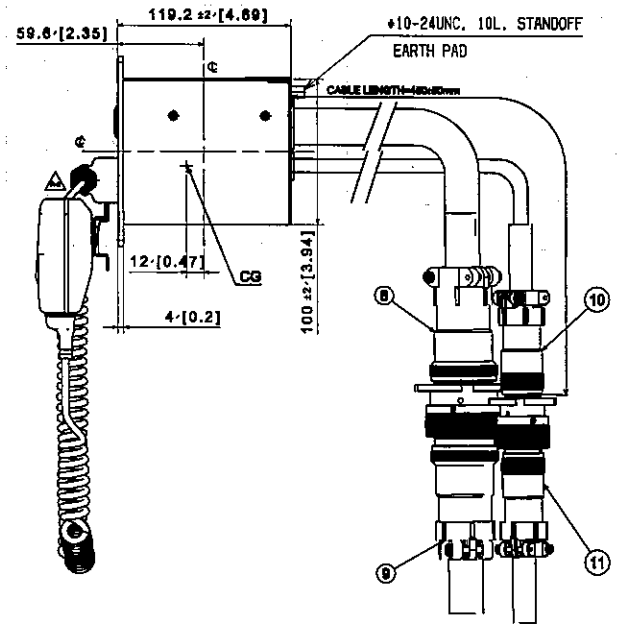

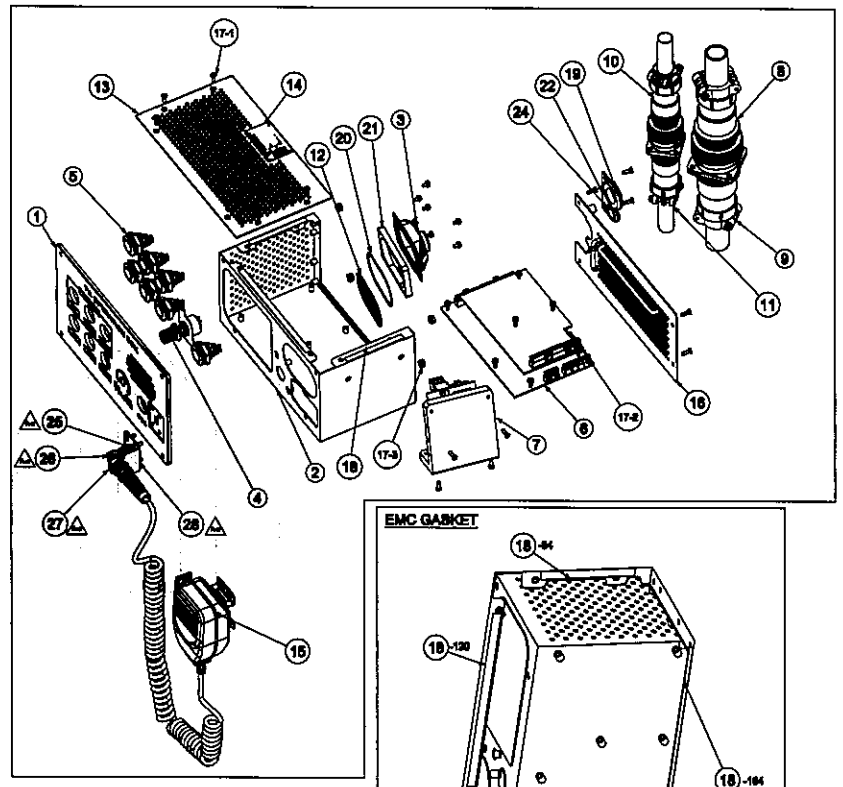

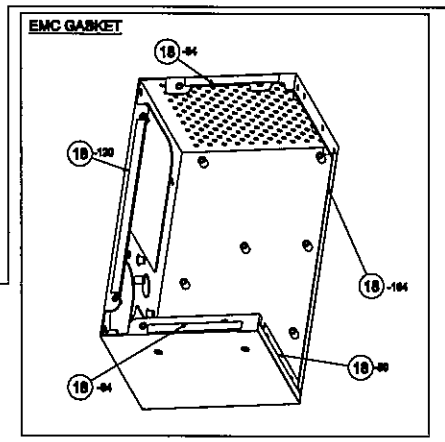

NO	SHAPE NO.				REV		B 명 DESCRIPTION	A 명 SPEC	도면번호 DWG NO.			발주 제외	생산 제외	조립 위치 ASSEMBLY
				1		1	FRONT PANEL	[illegible]	[illegible]					FRAME
				1		2	SPO FRAME	[illegible]	[illegible]					FRAME
				1		3	SPEAKER	[illegible]	[illegible]					
				1		4	VOLUME CONTROL	[illegible]	[illegible]					
				1		5	ILLUMINATION SWITCH-SB	[illegible]	[illegible]					
				1		6	SPO CONTROL BOARD	[illegible]	[illegible]					
				1		7	POWER CONVERTER	[illegible]	[illegible]					
				1		8	CONNECTOR,X1	[illegible]						
				1		9	CONNECTOR,X1	[illegible]						
				1		10	CONNECTOR,X2	[illegible]						
				1		11	CONNECTOR,X2	[illegible]						
				1		12	WIRE MESH	[illegible]	[illegible]		-	01		
				1		13	UPPER COVER	[illegible]	[illegible]					
				1		14	NAME PLATE	[illegible]	[illegible]		-	09		
				1		15	HAND SEO	[illegible]	[illegible]					
				1		16	REAR COVER	[illegible]	[illegible]					FRAME
				1		17	BOLT & NUT LIST	[illegible]						
				1		18	EMC GASKET	[illegible]			-	08		
				1		19	RUBBER GROMMET	[illegible]	[illegible]					
				1		20	GASKET	[illegible]	[illegible]		-	08		
				1		21	RUBBER GASKET	[illegible]	[illegible]					
				1		22	GROMMET BRACKET	[illegible]	[illegible]					FRAME
				1		23	SPO WIRING DIAGRAM	[illegible]	[illegible]					
				1		24	RUBBER GROMMET	[illegible]	[illegible]					
				1		25	CONNECTOR	[illegible]						
				1		26	CONNECTOR	[illegible]						
				1		27	CABLE CLAMP	[illegible]						
				1		28	CONNECTOR BRACKET	[illegible]						

치수				
허용	~ 45	2	3	4
	~ 30	2	2	3
	~ 10	1	1	1.5
제한	< 3	0.5	1	1
주조 CASTING	~ 3150	-	-	7
	~ 1500	4	5	8
	~ 800	3	4	6
	~ 400	2	3	5
	~ 200	0.5	2	4
	~ 100	1	1	3.5
용접 WELD	A	B	C	
일반 공차 (±) GENERAL TOLERANCE	~ 200	8	14	20
	~ 150	7	12	20
	~ 120	6	10	14
	~ 80	5	8	14
	~ 40	4	6	11
	~ 20	3	4	8
	~ 10	2	3	6
	~ 315	1	2	4
	~ 120	1	2	3
	~ 30	1	1	1
용접 WELD	A	B	C	
절삭 가공 MACHINING (±)	~ 200	-	0.8	0.8
	~ 150	-	0.8	0.8
	~ 120	-	0.8	0.8
	~ 80	-	0.5	0.8
	~ 40	0.3	0.5	0.8
	~ 20	0.3	0.5	0.8
	~ 10	0.3	0.5	0.8
	~ 315	0.3	0.5	1.2
	~ 120	0.15	0.3	0.4
	~ 30	0.1	0.2	0.5
	~ 6	0.05	0.1	0.2
용접 WELD	A	B	C	

기호 MARK	일자 DATE	변경 내역 DETAIL OF REVISION(E.C ZONE)	설변번호 E.C NO.	설계 DGN	검도 CHK	승인 APP
Fx1	2012.07.16	The supplier improved the connector.	RNE1002-UN90	Y.S.JEON	C.Y.LEE	S.H.PARK
Ex1	2012.03.15	The supplier revised the drawing.		Y.S.JEON	C.Y.LEE	S.H.PARK
Dx1	2012.01.05	The supplier revised painting spec.		Y.S.JEON	C.Y.LEE	S.H.PARK
Cx1	2011.11.25	The figure was changed for interference		Y.S.JEON	C.Y.LEE	S.H.PARK
Bx1	2011.10.25	The supplier revised the drawing for FDR		Y.S.JEON	C.Y.LEE	S.H.PARK
Ax1	2011.06.10	The MIC Jack was changed by CUSTOMER		Y.S.JEON	C.Y.LEE	S.H.PARK

품목 NO.	부품 번호 PART NO.	품명 DESCRIPTION	재질 MATERIAL	수량 Q'TY	검증 V.I	비고 REMARKS
승인 APP	S.H.PARK 2011.03.25	재질 MAT'L ASSY				
검도 CHK	C.Y.LEE 2011.03.17	총중량 G.W 9.3 lbs				
설계 DGN	Y.S.JEON 2011.03.11					
제도 DRG		참조번호 REF. NO.				

WOOJIN

DIM. IN (mm) | 작성일 2011.07.10 | 승인 APPROVED | DENVER RTD FASTRACKS

척도 SCALE 1 / 1 | 작성 DRAWN S.H.KANG | B.J.JONE | DRIVER PA OPERATING BOX

설계 DESIGNED - | 검도 CHECKED | 승인 APPROVED J.Y.LEE | R1D1473-39954 | A-a

TITLE: DRIVER PA OPERATION BOX

DRG. NO: RES14001CT0 | Ver. 00 | Rev. -F | RNE1002

SCALE N/S | 매수 SHEET 1 of 1

B | SIZE D

HC | CD | CT

H-PRJT

현대로템주식회사

본 도면은 현대로템의 재산임 · PROPERTY OF HYUNDAI ROTEM, CANNOT BE DISTRIBUTED OR REPRODUCED WITHOUT AUTHORIZATION.

CATIA

Hyundai Rotem 254096 2012-09-28 11:49

Hyundai Rotem|10.198.33.77|254096|2012-10-15 18:32:06

군번 GROUP NO.				품번 ITEM	품 명 DESCRIPTION	사 양 SPEC	도면번호 DWG NO.	-	품번 및 군번	중량.길이 폭x길이	표면처리 S/TREATMENT
			1	1	GOOSENECK MIC	DGN99E/AKG					
			1	2	XLR CONNECTOR	3-PIN MALE XLR/MTM					
			1	3	WIRE	100G1121-0.5-0/9/RAYCHEM					
			1	4	NAME LABEL	COTTON PAPER	R1D000452	-	17		
			1	5	CONNECTOR	770-213/WAGO					
			1	6	CONNECTOR	770-203/WAGO					
			1	7	LOCKING LEVER	770-101/WAGO					
			1	8	HARNESS	100G0111-2.5-0/RAYCHEM					

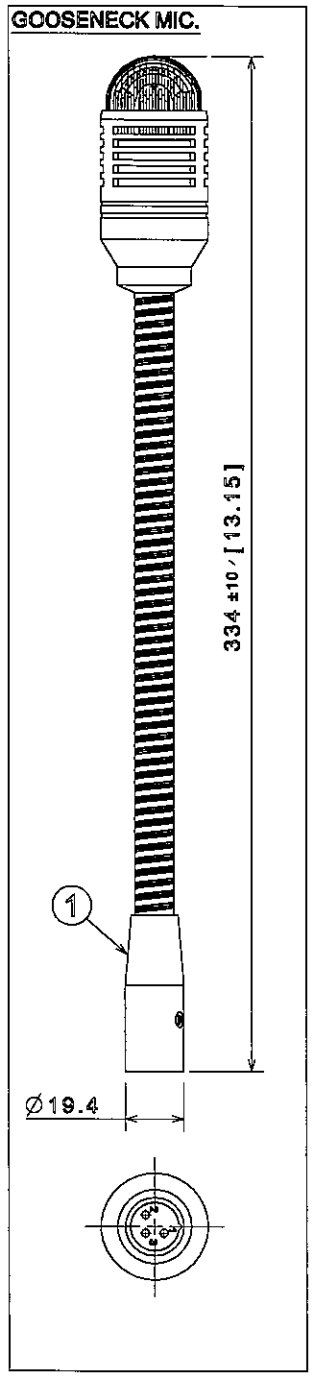

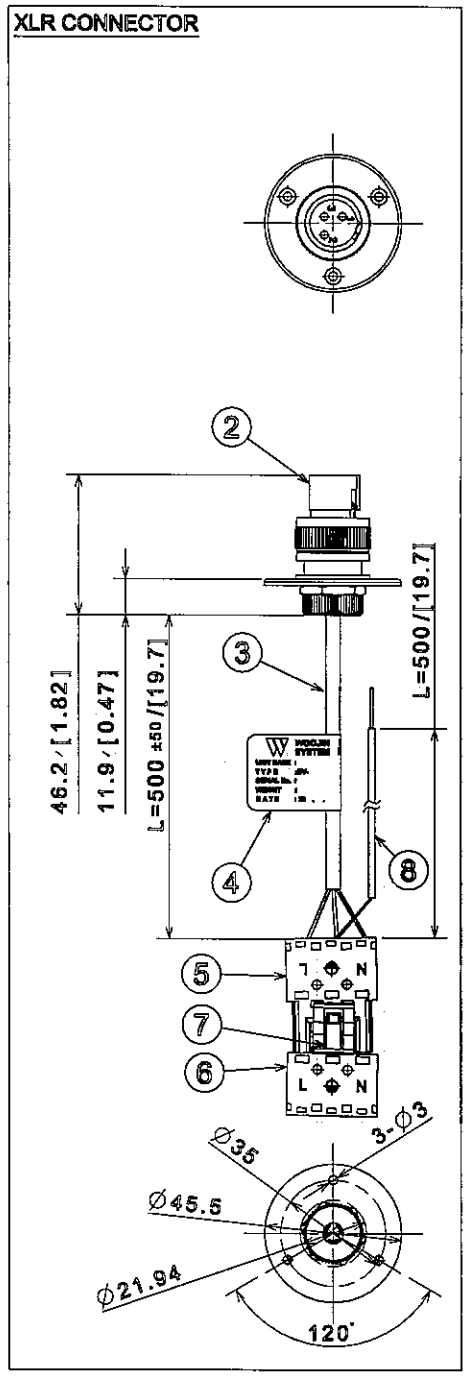

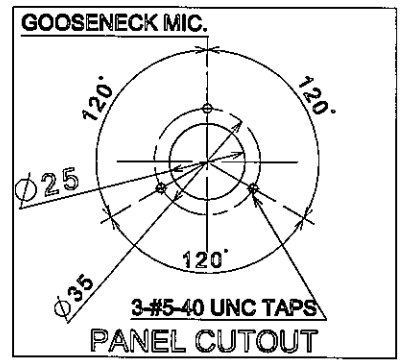

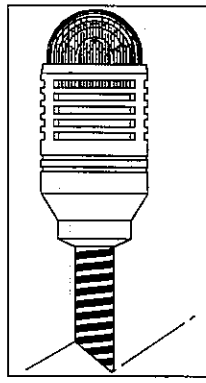

SPECIFICATIONS

1. GOOSENECK SPEC.
   - Polor pattern : cardiold
   - Frequency range : 150-15,000 Hz
   - Sensitivity : 2.2 mV/Pa (-54 dBV)
   - Max. SPL : 133 dB (1% THD)
   - Equivalent noise level : 21 dB-A
   - Signal/noise ratio (A-weighted) : 73 dB
   - Impedance : 530 ohms
   - Recommended load impedance : >2,000 ohms
   - Connector : 3-pin male XLR
   - Finish : matte black
2. WEIGHT : 0.4kg

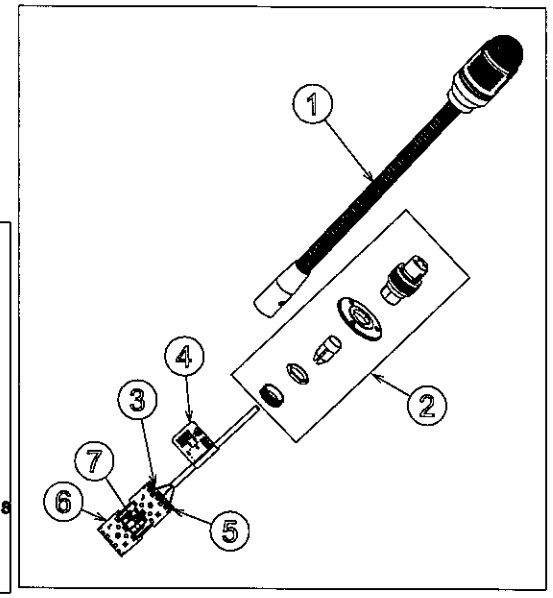

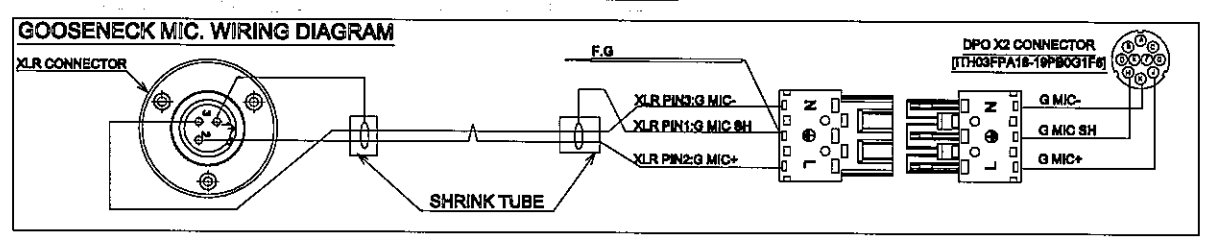

등급 GRADE	A	B
주물 구멍 CASTING (±)		
~20M	8	14
~15M	7	12
~12M	6	10
~8M	5	8
~4M	4	6
~2M	3	4
~1M	2	3
~315	1	2
~120	1	2
~30	1	1

등급 GRADE	A	B	C
용접 구멍 WELDING (±)			
~20M	-	6.0	8.0
~15M	-	5.0	7.0
~12M	-	4.0	5.0
~8M	-	3.0	5.0
~4M	0.8	2.0	4.0
~2M	0.5	1.2	3.0
~1M	0.3	0.8	2.0
~315	0.2	0.5	1.2
~120	0.15	0.3	0.8
~30	0.1	0.2	0.5
3~6	0.05	0.1	0.2

등급 GRADE	A	B	C
기계 가공용 MACHINING (±)			
규정치이외는 일반공차표 GENERAL TOLERANCE			

개정 CHANGE

DGN	H.Y.JANG	APP	B.J.JONE
Redrawing. 2012.03.12			A

GENERAL TOLERANCE (WMS-C-40201)

설계MEMO

DIM. IN mm	작성일 DATE	2011.10.07	승인 APPROVED
척도 SCALE	작성 DRAWN	B.H.KANG	B.J.JONE
1 / 2	설계 DESIGNED	-	
공차 적용기준 : WMS C 40201	검토 CHECKED	J.Y.LEE	

WOOJIN Industrial Systems Co., Ltd.

DENVER RTD FASTRACKS

DRIVER MICROPHONE ASSEMBLY (DMA:GOOSENECK MIC)

R1D1473-25863 A

기호 MARK	일자 DATE	변경내역 DETAIL OF REVISION(E.C ZONE)	설변번호 E.C NO.	설계 DGN	검도 CHK	승인 APP
Ex1	2012.03.15	The supplier revised the shape of Mic.		Y.S.JEON	C.Y.LEE	S.H.PARK
Dx1	2012.01.05	The supplier inserted connector spec.		Y.S.JEON	C.Y.LEE	S.H.PARK
Cx1	2011.12.29	The Connector is detailed		Y.S.JEON	C.Y.LEE	S.H.PARK
Bx1	2011.10.25	The supplier revised the drawing for FDR		Y.S.JEON	C.Y.LEE	S.H.PARK
Ax1	2011.08.10	The shape of MIC was changed by CUSTOMER		Y.S.JEON	C.Y.LEE	S.H.PARK

품번 NO.	부품 번호 PART NO.	품 명 DESCRIPTION	재 질 MATERIAL	수량 Q'TY	중량 V.T	비 고 REMARKS

승인 APP	S.H.PARK 2011.03.25	재질 MAT'L	ASSY
검도 CHK	C.Y.LEE 2011.03.17	총중량 G.W	0.8 lbs
설계 DGN	Y.S.JEON 2011.03.11	일반공차 MC / WD / CT	B
제도 ORG		SIZE	C

명 칭 TITLE: DRIVER MICROPHONE ASSY

도면 번호 DRG. NO: RES14002CT0 MS — Ver. 00 Rev. -E

SCALE N/S 매수 SHEET 1 of 1

참조번호 REF. NO.

HYUNDAI Rotem 현대로템주식회사

RNE1002 — 본-PRJT — 정리번호

본 도면은 당사 재산으로서 승인없이 무단복사/배포 금지됨. PROPERTY OF ISSUING ENTITY. CANNOT BE DISTRIBUTED OR REPRODUCED WITHOUT AUTHORIZATION.

CATIA

Hyundai Rotem 254096 2012-05-14 12:35
Hyundai Rotem|10.196.33.77|254096|2012-05-15 18:47:51

NOTE.

1. Weight : 3.3kg
2. BOLT &NUTS
   - Item no.
3. EMC TAPE LENGTH DESCRIPTION
   - (10)-341mm
     - Length
     - Item no.
4. Non-assigned connector sockets/pins should be filled
5. SURFACE TREATMENT
   1) ITEM : NO.1,2,3,13,15,16,17,18,19,21
   - COLOR : BLACK
   - COLOR CODE : UT-721N TOP N-1.5,G20
   - MAKER : PPG

NO.	TYPE	SIZE	Q'TY
9-1	FLAT HEAD BOLT	M5X0.8	8
9-2	ROUND HEAD BOLT	M5X0.8	3
	SPRING WASHER	M5(M4)X10.8	
	FLAT WASHER	M5(M4).5X19.5	
9-3	ROUND HEAD BOLT	M5X0.12	4
	SPRING WASHER	M5(M4)X10.8	
	FLAT WASHER	M5(M4).5X19.5	
9-4	ROUND HEAD BOLT	M5X0.8	4
	SPRING WASHER	M5(M4)X10.8	
	FLAT WASHER	M5(M4).5X19.5	

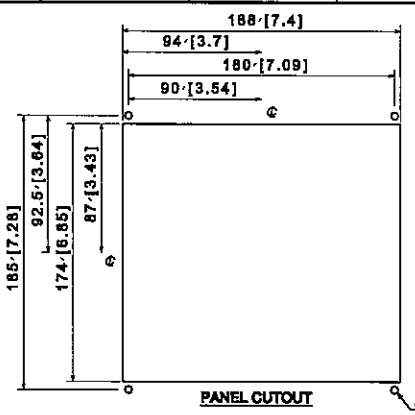

X1: PIN ASSIGNMENT
[17HORFFAJS-21PSC01P0]

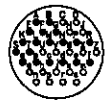

SYM.	SIZE	SYM.	SIZE
A	[illegible]	G	[illegible]
B	[illegible]	H	[illegible]
C		I	[illegible]
D		J	[illegible]
E	LINE	K	[illegible]
F	LINE AWG [illegible]	L	[illegible]
G	LINE AWG [illegible]	M	[illegible]
H		N	[illegible]
J		P	[illegible]
K	PIN [illegible]	Q	[illegible]
L	PIN [illegible]	R	[illegible]
M	PIN [illegible]	S	[illegible]
N	PIN [illegible]	T	[illegible]
P	PIN [illegible]	U	[illegible]
R	PIN [illegible]	V	[illegible]
S	SEND		
T	SEND		
U			
V			
Z			
Z			

SYM.	NO.	PART NAME	SPEC	PART NO.	Q'TY	MATERIAL	REMARKS
	1	FRONT PANEL	AL[illegible]	[illegible]			PAINTING
	2	FRAME	[illegible]	[illegible]			PAINTING
	3	REAR COVER	[illegible]	[illegible]			PAINTING
	4	CONNECTOR	[illegible]				
	5	CONNECTOR	[illegible]				
△	10	[illegible]	[illegible]	[illegible]			
	7	CONNECTOR	[illegible]				
	8	HAND MIC	[illegible]	[illegible]			
	9	BOLT & NUT LIST	ASSY				
	10	EMC TAPE	[illegible]				
	11	CONTROL BOARD	ASSY,[illegible]	[illegible]			
	12	NAME PLATE	AL,[illegible]	[illegible]	- 20		
	13	SWITCH PANEL	AL[illegible]	[illegible]	- 21		PAINTING
	14	SPK [illegible]	ASSY	[illegible]			
△	15	CONNECTOR [illegible]	[illegible]	[illegible]	- 22		PAINTING
△	16	[illegible]	AL[illegible]	[illegible]	- 23		PAINTING
△	17	PLATE	AL,[illegible]	[illegible]	- 24		PAINTING
	18	PLATE	AL,[illegible]	[illegible]	- 25		PAINTING
	19	PLATE	AL,[illegible]	[illegible]	- 26		PAINTING
△	20	CABLE CLAMP [illegible]	[illegible]	[illegible]			
△	21	BRACKET	ASSY-CAL [illegible]				PAINTING

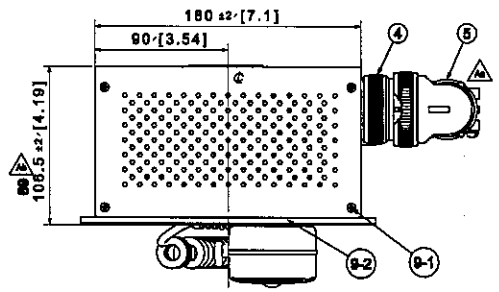

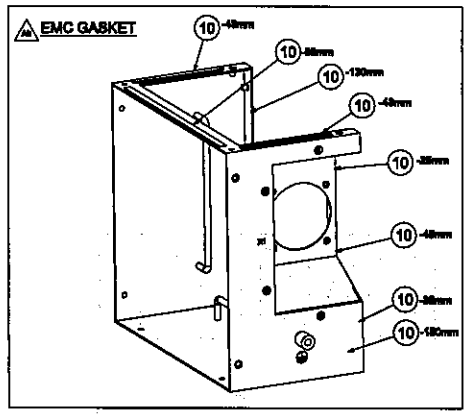

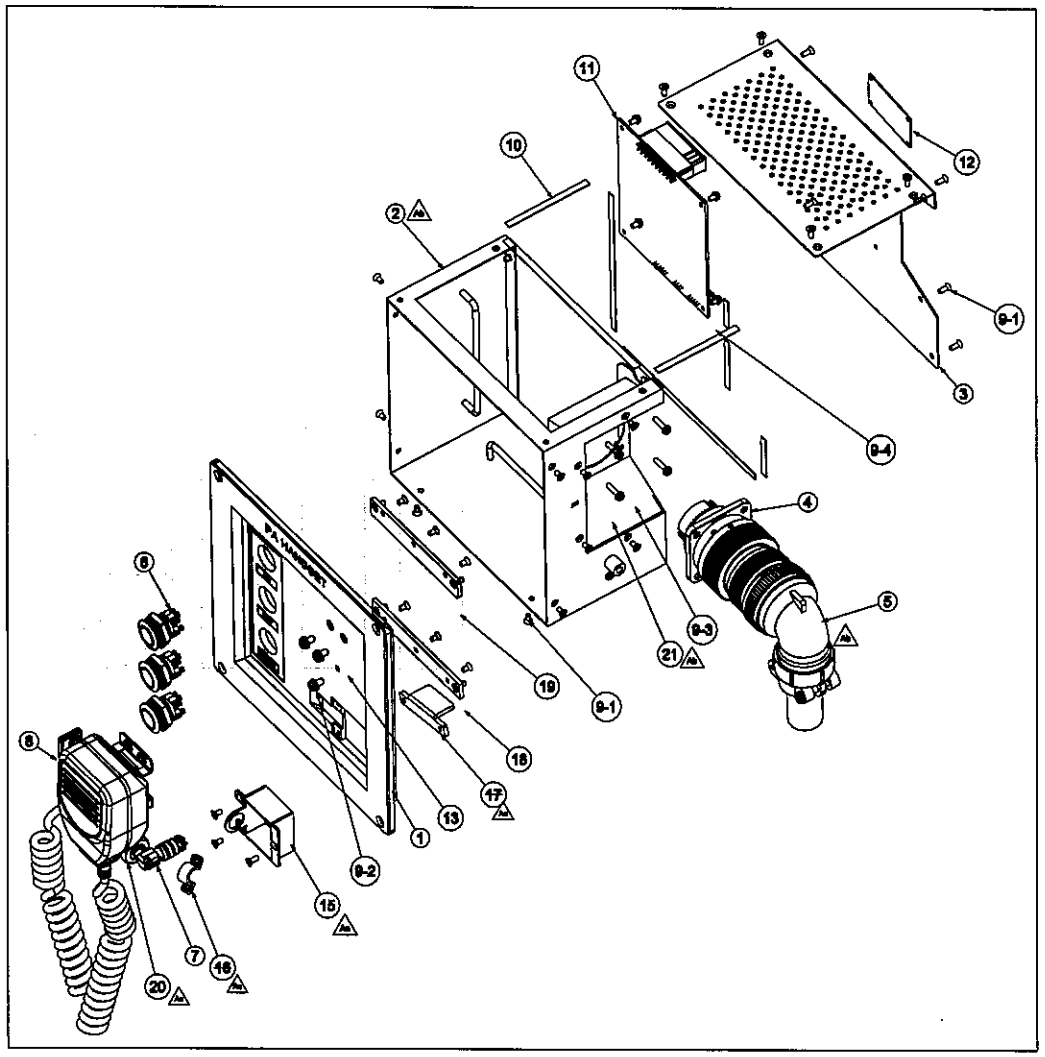

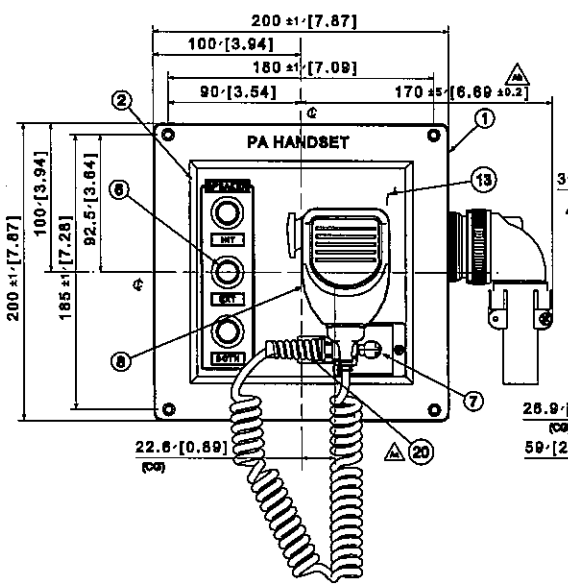

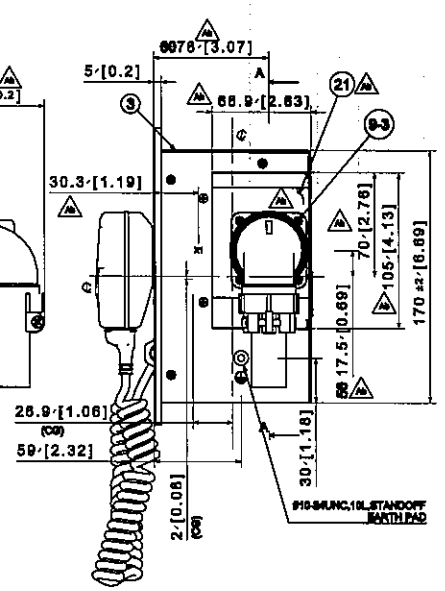

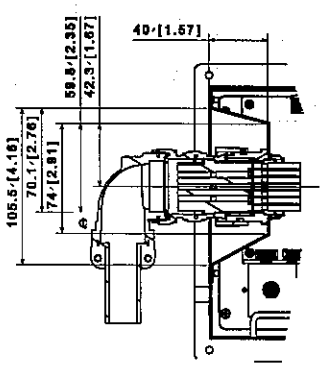

Section view A-A
Scale: 1:2

치수			
허용	~ 43	2	4
	~ 30	2	3
	~ 10	1	1.5
	< 3	0.5	1
표면	~315[illegible]	-	3
	~1000	4	5
	~2000	3	4
	~4000	2	3
	~2500	1.5	2
	~1000	1	1.5
표면 처리		A	B
표면처리 PAINTING (d)			
~250	8	16	24
~150	7	12	21
~120	6	10	18
~80	5	8	16
~40	4	6	11
~25	3	4	8
~10	2	3	6
~3.15	1	2	4
~1.25	1	2	3
~0.35	1	1	1.5
표면 처리 GRADE	A	B	C
표면 구배 (d)			
~250	-	6.0	8.0
~150	-	5.0	7.0
~120	-	4.0	6.0
~80	-	3.0	5.0
~40	1.0	2.0	4.0
~25	0.5	1.2	3.0
~10	0.3	0.8	2.0
~3.15	0.2	0.5	1.2
~1.25	0.15	0.3	0.8
~0.35	0.1	0.2	0.5
2~5	0.05	0.1	0.2
표면 처리 GRADE	A	B	C
표면 처리 HARDENING (d)			
구분되지 않은 일반공차 GENERAL TOLERANCE			

기호 MARK	일자 DATE	변경내역 DETAIL OF REVISION(E.C ZONE)	설변번호 E.C NO.	설계 DGN	검도 CHK	승인 APP
Fx1	2012.07.16	Supplier corrected the Q'ty of item 6.	RNE1002-UL44	Y.S.JEON	C.Y.LEE	S.H.PARK
Ex1	2012.05.15	Supplier changed the shape of connector.		Y.S.JEON	C.Y.LEE	S.H.PARK
Dx1	2012.04.18	The supplier revised the strain relief.		Y.S.JEON	C.Y.LEE	S.H.PARK
Cx1	2012.03.15	The supplier revised the recess plate.		Y.S.JEON	C.Y.LEE	S.H.PARK
Bx1	2012.01.05	The supplier revised painting spec.		Y.S.JEON	C.Y.LEE	S.H.PARK
Ax1	2011.10.25	The supplier revised the drawing for FDR		Y.S.JEON	C.Y.LEE	S.H.PARK

부품번호 PART NO.	품명 DESCRIPTION	재질 MATERIAL / 수량 Q'TY / 중량 V.T / 비고 REMARKS
승인 APP	S.H.PARK 2011.03.25	제목 TITLE: DRIVER PA OPERATION HANDSET
검도 CHK	C.Y.LEE 2011.03.17	총중량 G.W 7.3 lbs
설계 DGN	Y.S.JEON 2011.03.11	도면번호 DRG. NO: RES14004CT0
체도 DRG		일반공차 HC / MC / CT: B
		SCALE N/S; 배율 SHEET 1 of 1; SIZE D
참조번호 REF. NO.		Ver. 00 / Rev. -F; RNE1002

DIM. IN (mm) | 미도 SCALE 1 / 2 | 작성 DRAWN 2011.07.19 B.H.KANG | 승인 APPROVED B.J.JONE | 설계 DESIGNED - | 검토 CHECKED J.Y.LEE

WOOJIN

DENVER RTD FASTRACKS

Driver PA HANDSET

R1C1183-04706 Ab

HYUNDAI Rotem 현대로템주식회사

본 도면은 귀사 재산으로서 외부에 유출되거나 타인에 양도, 대여 또는 복제할 수 없으며 이를 위반할 때는 민사 및 형사상의 책임을 지게 됩니다. PROPERTY OF HYUNDAI ROTEM COMPANY. CONTENTS MUST NOT BE DISCLOSED OR REPRODUCED WITHOUT WRITTEN PERMISSION. CATIA

Hyundai Rotem 254096 2012-09-28 11:48
Hyundai Rotem|10.199.33.77|254096|2012-10-15 18:33:08

품번 ITEM	품 명 DESCRIPTION	사 양 SPEC	도면번호 DWG NO.		품번 및 규격	생산.검사 폭x길이	표면처리 S/TREATMENT
1	INSTALL PLATE	304SS					
2	SWITCH	84-1201,7,84-7111,800,84-8810.0020/EAO					
3	CONNECTOR	770-213/WAGO					
4	CONNECTOR	770-203/WAGO					
5	LOCKING LEVER	770-101/WAGO					
6	HARNESS	100G0121-0.5-0/MRAYCHEM					
7	NAME LABEL	CUTTON PAPER	R1D000462	-	21		

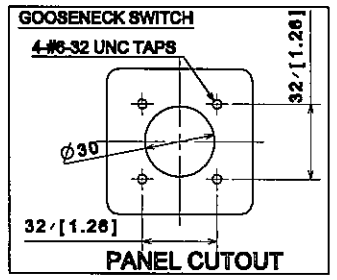

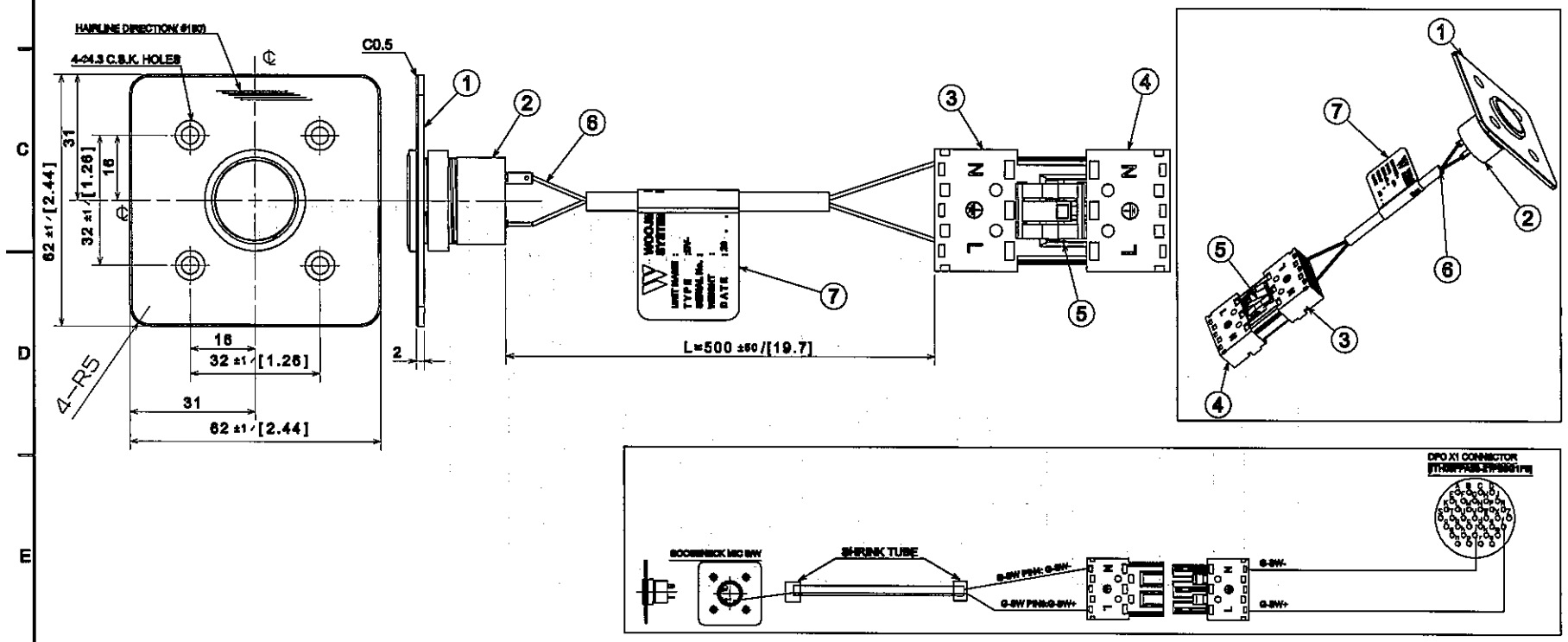

개정 CHANGE			
Release 2012.05.12	DIM	K.Y.JEON	APP B.J.JONE
Revision 2012.07.17	DIM	K.Y.JEON	APP B.J.JONE

설계MEMO

DIM. IN mm	작성일 DATE	2012.03.06	승인 APPROVED
척도 SCALE	작성 DRAWN	B.H.KANG	B.J.JONE
1 / 1	설계 DESIGNED	-	
공차 적용기준 : WMS C 40201	검토 CHECKED	J.Y.LEE	

WOOJIN Industrial System Co., Ltd.

DENVER RTD FASTRACKS

GOOSENECK MIC SWITCH

R1D001166 A

품번 NO.	부품 번호 PART NO.	품 명 DESCRIPTION	재 질 MATERIAL	수량 Q'TY	중량 W.T	비 고 REMARKS

승인 APP	S.H.PARK 2012.03.15	재질 MAT'L ASSY	명 칭 TITLE: PUSH BUTTON
검토 CHK	C.Y.LEE 2012.03.14	총중량 G.W 0.2 lbs	
설계 DGN	Y.S.JEON 2012.03.13	일반공차 MC B / WD / CT	도면 번호 DRG. NO: RES14006CT0 MS; Ver. 00 Rev. -A
제도 DRG		SIZE B	SCALE N/S; 매수 SHEET 1 of 1

참고번호 REF. NO.

HYUNDAI Rotem 현대로템주식회사

RNE1002

년-PRJT

정리번호

CATIA

기 호 MARK	일 자 DATE	변 경 내 역 DETAIL OF REVISION(E.C ZONE)	설변번호 E.C NO.	설계 DGN	검토 CHK	승인 APP
Ax1	2012.07.16	The supplier revised the wire connection	RNE1002-U144	Y.S.JEON	C.Y.LEE	S.H.PARK

두께 THICKNESS			
	~ 40	2	4
	~ 30	2	3
	~ 10	1	1.5
	< 3	0.5	1
길이 LENGTH	~3150	-	7
	~1600	4	5
	~ 800	3	4
	~ 400	2	3
	~ 200	1.5	2
	~ 100	1	1.5
등 급 GRADE		A	B

주조 주강품 CASTING (±)			
~ 20M	8	14	24
~ 15M	7	12	21
~ 12M	6	10	18
~ 8M	5	8	14
~ 4M	4	6	11
~ 2M	3	4	8
~ 1M	2	3	6
~ 315	1	2	4
~ 120	1	2	3
~ 30	1	1	1
등 급 GRADE	A	B	C

용접 구조물 WELDING (±)			
~ 20M	-	6.0	8.0
~ 15M	-	5.0	7.0
~ 12M	-	4.0	6.0
~ 8M	-	3.0	5.0
~ 4M	0.8	2.0	4.0
~ 2M	0.5	1.2	3.0
~ 1M	0.3	0.8	2.0
~ 315	0.2	0.5	1.2
~ 120	0.15	0.3	0.8
~ 30	0.1	0.2	0.5
3~6	0.05	0.1	0.2
등 급 GRADE	A	B	C

기계 기공품 MACHINING (±)			
규정치않은 일반공차표 GENERAL TOLERANCE			

본 도면은 당사 재산으로서 허가없이 무단복사/배포 금지됨. PROPERTY OF ISSUING ENTITY. CANNOT BE DISTRIBUTED OR REPRODUCED WITHOUT AUTHORIZATION.

NOTE

1. BOLT DESCRIPTION
   (14-1)
   - ITEM NO.
2. EMC TAPE LENGTH DESCRIPTION
   (18-1) -341mm
   - Length
   - Item no.
3. NON-ASSIGNED CONNECTOR SOCKETS/PINS SHOULD BE FILLED
4. LOCATION OF EACH PASSENGER INTERCOMS ARE CONSPICUOUSLY MARKED WITH LUMINESCENT MATERIAL.

TECHINICAL DATA

1. POWER : DC 37.5V Max.31W
2. SURFACE TREATMENT
   1) ITEM : NO. 2,3
      - COLOR : BLACK
      - COLOR CODE : UT-721N TOP N-1.5,G20
      - MAKER : PPG
   2) ITEM : NO. 1
      - HAIRLINE #180
   3) ITEM : NO.1
      TEXT PAINT SPEC.
      - PAINT CODE : #500-150-A0010
      - MAKER : JE-BI PYO
      - MATERIAL : ENAMEL
   4) ITEM : NO.6
      - SILK PRINT COLOR : RED (SAMSUNG INK)
      - UPPER COATING : Akron #2000(A310-A4052)
3. SPEAKER
   1) IMPEDANCE : 8ohm ±15%
   2) POWER RATING : 3W (MAX.5W)
   3) SOUND PRESSURE LEVEL : 86±5dB ± 3dB
   4) RESONANCE FREQUENCY : 240 250Hz±20%
   5) FREQUENCY RANGE : 0~20,000Hz F0~15kHz
4. WEIGHT : 2kg
   2.4

NO.	TYPE	SIZE	QTY
17-1	FAN HEAD SCREW	M3x1.5	8
	SPRING WASHER	M3x0.8x0.8	8
	FLAT WASHER	M3x6.8x0.5	8
17-2	FAN HEAD SCREW	M3x1.10	4
	SPRING WASHER	M3x0.8x0.8	4
	FLAT WASHER	M3x6.8x0.5	4
17-3	FAN HEAD SCREW	M3x1.12	4
	SPRING WASHER	M3x0.8x0.8	4
	FLAT WASHER	M3x6.8x0.5	4
17-4	FLAT HEAD SCREW	M3x1.10	4
17-5	HEXAGON NUT	M4	4
	PWAHER & SPRING	M4	4

X1: PIN ASSIGNMENT
[ITH03FPA28-21PB0G1F6]

NO.	ITEM	NO.	ITEM
A	POWER1-VCC	a	DUAL TONE+(out)
b	POWER1-GND	b	DUAL TONE-(out)
C		c	DUAL TONE SH(out)
D		d	DUAL TONE+(in)
E	LIVE	e	DUAL TONE-(in)
F	LIVE ASS GND(in)	f	DUAL TONE SH(in)
G	LIVE ASS GND(out)	g	
H		h	
J		j	
K	PEI MIC+(out)	k	
L	PEI MIC-(out)	m	
M	PEI MIC SH(out)	n	
N	PEI TXH+(out)	p	
P	PEI TXL-(out)	r	
R		s	
S	PEI MIC+(in)		
T	PEI MIC-(in)		
U	PEI MIC SH(in)		
V	PEI TXH+(in)		
W	PEI TXL-(in)		
X			
Z			

관련 GROUP NO.					레벨 LEVEL	품번 ITEM	품명 DESCRIPTION	사양 SPEC	도면번호 DWG NO.	-	개정 관련	생산·검사 좌×공차	표면처리 S/TREATMENT
					1	1	FRONT PANEL	304SS,t1.5	R1D000954				HAIRLINE#180
					1	2	FRAME	A356-01,t1.2	R1D000955				PAINTING
					1	3	REAR COVER	A351-CC,t1.2	R1D000956				PAINTING
					1	4	SPEAKER	PMM4070-8-SH12,8OR 4STS101-008-40-S-110+---,8ohm,3W	R1D000974				
					1	5	SWITCH BLOCK	6113K3K01733 LPL 6113K3K01733---APEM	R1D000990				
					1	6	SWITCH HOLDER	304SS	R1D000991				
					1	7	MIC BOARD	ASSY	R1D000967	-	01		
					1	8	LED BOARD	ASSY	R1D000963	-	01		
					1	9	POWER CONVERTER BOARD	VICOR	R1D000966				
					1	10	PEI CONTROL BOARD	PEI-CS	R1D000968				
					1	11	LED INDICATOR(GREEN)	VL3000F300	R1D000969	-	04		
					1	12	LED INDICATOR(RED)	VL3000F600	R1D000969	-	05		
					1	13	LED INDICATOR(YELLOW)	VL3000F900	R1D000969	-	02		
					1	14	MICROPHONE	ASM-404P-WM-86A180Panasonic	R1D000967	-	02		
					1	15	CONNECTOR	ITH03FPA28-21PB0G1F6GLENAIR					
					1	16	NAME PLATE	AL,t=1	R1D000962	-	11		
					1	17	BOLT & WASHER LIST	ASSY					
					7	18	EMC GASKET	SF0600105R-C-NA-A, S-SONG					
					1	19	CONNECTOR	ITH03F36-21B0G1F6GLENAIR					
					1	20	WIRE MESH	304SS	R1D000460	-	01		
					1	21	WIRE MESH	304SS	R1D000460	-	02		
					1	22	S-SHEET	304SS,t0.7	R1D000460	-	03		
					1	23	RUBBER SHEET	NUBBER,t5.0	R1D000977				
					1	24	RUBBER SHEET	NUBBER,t5.0	R1D000980				
					1	25	PEI WIRING DIAGRAM	ASSY	R1D000448				

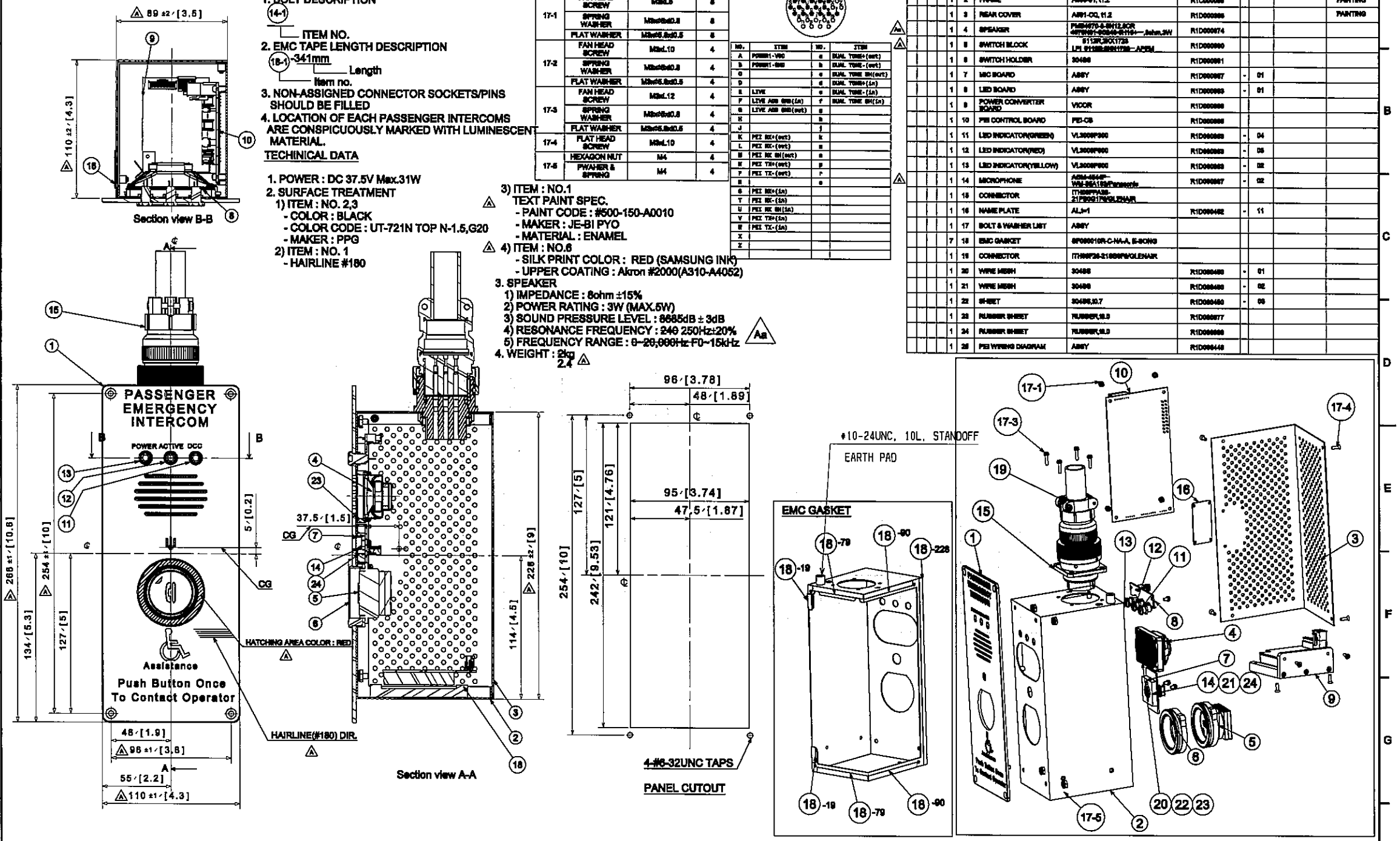

개정 CHANGE				
	Model changed. Speaker changed. Speaker holder deleted. Speaker holder added. Front panel, rear cover, frame, wire mesh, S-sheet, rubber sheet, name plate, wire harness, speaker, switch block, switch holder, mic board, LED board, PEI control board, power converter board, connector, microphone, LED indicator, bolt, washer, EMC gasket

TECHNICAL DATA :

1. SPEAKER △A
   1) IMPEDANCE : 8ohm ±15%
   2) POWER RATING : ~~10W~~ 25W 93
   3) SOUND PRESSURE LEVEL : ~~80±2dB~~
   4) RESONANCE FREQUENCY : ~~700±15%~~ 200Hz ±50Hz
   5) FREQUENCY RANGE : ~~250~10,000Hz~~ 200Hz~13KHz
△A 2. WEIGHT : ~~1.6kg~~ 2.0kg
3. SURFACE TREATMENT
   1) ITEM : NO. 2
      - COLOR : BLACK
      - COLOR CODE : UT-721N TOP N-1.5,G20
      - MAKER : PPG
   2) ITEM : NO. 1
      - HAIRLINE #180
   3) ITEM : NO. 3
      - S/TREATMENT : Zn PLATING

NOTE

1. BOLT TYPE DESCRIPTION
   (8) — ITEM NO.
2. EMC GASKET LENGTH DESCRIPTION
   (10) -255mm — LENGTH; ITEM NO.

CONNECTOR PIN ARRANGEMENT

1. SPEAKER+
2. SPEAKER-
3. NC

NO.	TYPE	SIZE	Q'TY
8-1	FLAT HEAD BOLT	M3XL8	4
8-2	ROUND HEAD BOLT	M4XL8	4
	SPRING WASHER	M4XΦ8Xt0.8	
	FLAT WASHER	M4XΦ8.8Xt0.5	
8-3	ROUND HEAD BOLT	M3XL14	2
	SPRING WASHER	M3XΦ5.8Xt1.0	
	FLAT WASHER	M3XΦ11Xt0.8	

조립 GROUP NO.					품번 ITEM		품 명 DESCRIPTION	사 양 SPEC	도면번호 DWG NO.	-	필요 수량	생산 · 외주 폭 x 길이	표면처리 S/TREATMENT
				1	1	1	FRONT PANEL	304SS, t3	R1D000403				HAIRLINE#180
				1	1	2	REAR COVER	AS61-CQ, t=1.0	R1D000402				PAINTING
				1	1	3	BRACKET	A386-61, t=1.2	R1D000401				Zn PLATING
				1	1	4	SPEAKER	SF-4038C,38W/DAESHIN ENG. EXTERIOR,AMB ELECTRON	R1D000405				
				1	1	5	M&C CONNECTOR	231-603/019-000, WAGO					
				1	1	6	M&C CONNECTOR	231-183/037-000, WAGO					
				1	1	7	SEALING GASKET	EPDM CR FORM, t5	R1D000408				
				1	1	8	BOLT & NUT LIST	ASSY					
				1	1	9	NAME PLATE	AL,t=1	R1D000452	-	14		
				4	4	10	EMC GASKET	SF060010R-C-NA-A, E-Seng					
				1	1	11	BOND	THREE BOND, 1521					
				1	1	12	RUBBER SHEET	EPDM, t5.0	R1D000404				
				1	1	13	RUBBER GROMET	EPDM, Φ15mm(0.59 Inch)	R1D000397				
				1	1	14	WIRE MESH	304SS,SCREEN #30, t0.3	R1D001045				
				1	1	15	E&P WIRING DIAGRAM	ASSY	R1D000498				

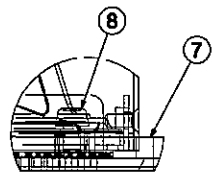

Detail B
Scale 1:1

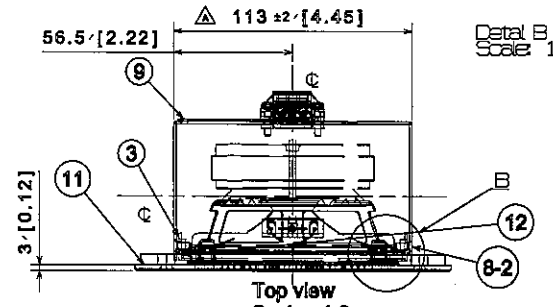

Top view
Scale: 1:2

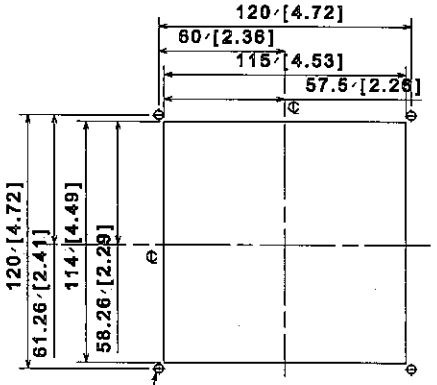

PANEL CUTOUT

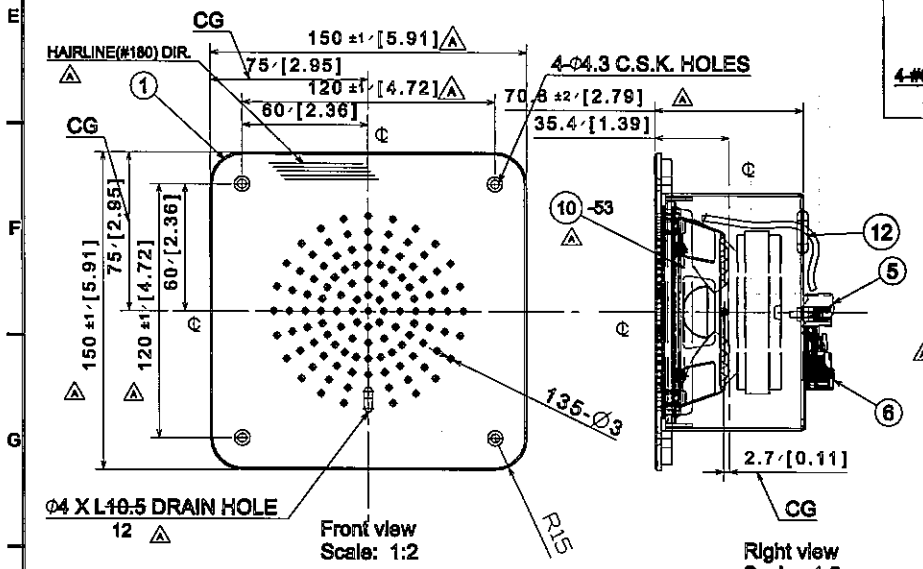

Front view
Scale: 1:2

Right view
Scale: 1:2

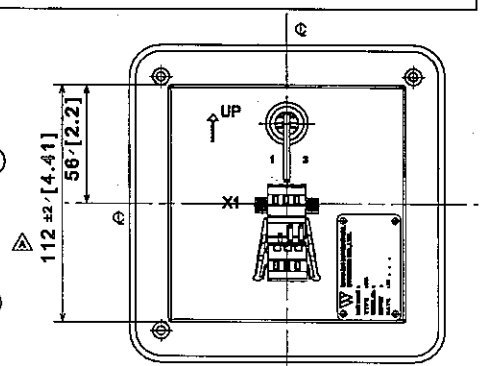

Rear view
Scale: 1:2

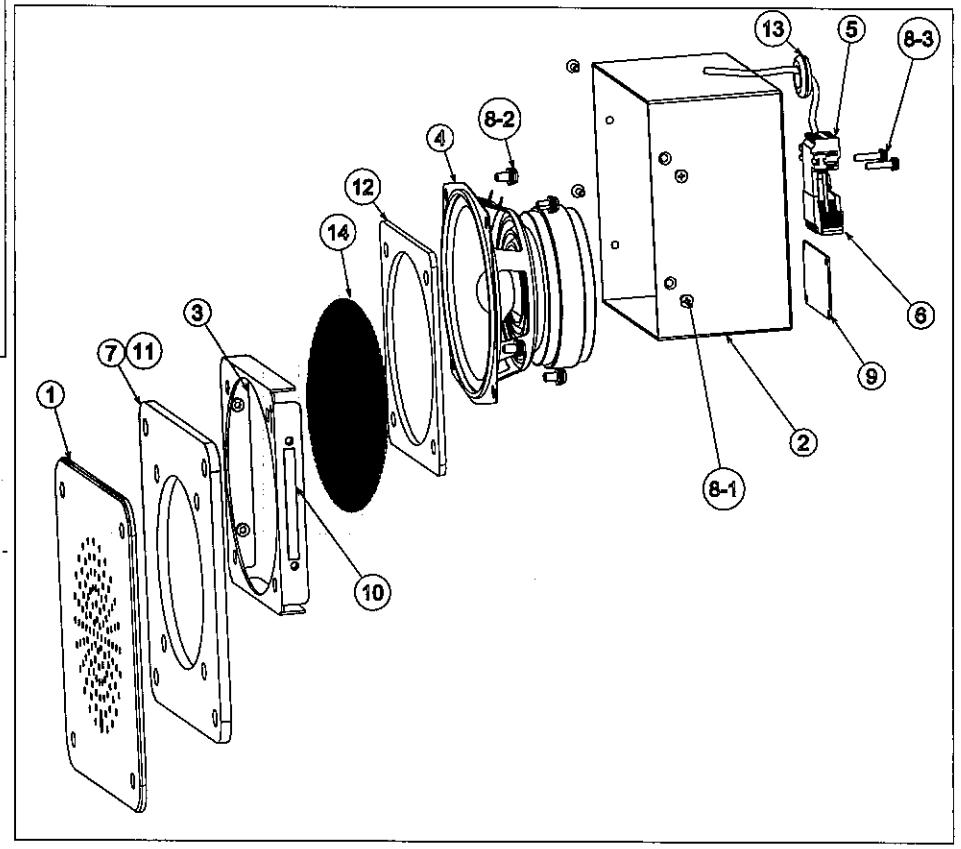

개정 CHANGE			
A	2012.08.12	1)Weight change. 2)Hole position changed. 3)Hole diameter changed. SPEC. 4 5)Marker marked. 6)Drain hole revised.(mm 10.0mm) 7)Screw marked.	

설계MEMO			
DIM. IN mm	작성일 DATE	2011.07.10	승인 APPROVED
척도 SCALE	작성 DRAWN	B.H.KANG	
1 / 2	설계 DESIGNED	-	B.J.JONE
공차 적용기준 : WMS C 40201	검토 CHECKED	J.Y.LEE	

WOOJIN Industrial System Co.,Ltd.

DENVER RTD FASTRACKS

EXTERIOR SPEAKER

R1D1473-25858 A

품번 NO.	부품 번호 PART NO.	품 명 DESCRIPTION	재 질 MATERIAL	수량 Q'TY	중량 W.T	비 고 REMARKS

Dx1	2012.03.15	The supplier changed the drain hole.	RNE1002-U090	Y.S.JEON / C.Y.LEE / S.H.PARK
Cx1	2012.01.05	The supplier revised painting spec.		Y.S.JEON / C.Y.LEE / S.H.PARK
Bx1	2011.12.01	The supplier revised the drawing for FDR		Y.S.JEON / C.Y.LEE / S.H.PARK
Ax1	2011.10.25	The supplier revised the drawing for FDR		Y.S.JEON / C.Y.LEE / S.H.PARK

기 호 MARK	일 자 DATE	변 경 내 역 DETAIL OF REVISION(E.C ZONE)	설변번호 E.C NO.	설계 DGN	검도 CHK	승인 APP

승인 APP	S.H.PARK 2011.03.25	재질 MAT'L	ASSY
검도 CHK	C.Y.LEE 2011.03.17	총중량 G.W	4.6 lbs
설계 DGN	Y.S.JEON 2011.03.11	원본결재 MC / WD / CT	
제도 DRG		B	
		SIZE	C

명 칭 TITLE: EXTERIOR SPEAKER

도면 번호 DRG. NO: RES17001CT0 MS — Ver. 00 / Rev. -D — RNE1002

SCALE N/S — 매수 SHEET 1 of 1

HYUNDAI Rotem 현대로템주식회사

본-PRJT

정리번호

참조번호 REF. NO.

본 도면은 당사 재산으로서 허가없이 무단복사/배포 금지됨. PROPERTY OF ISSUING ENTITY. CANNOT BE DISTRIBUTED OR REPRODUCED WITHOUT AUTHORIZATION.

CATIA

Hyundai Rotem 254096 2012-05-14 12:35
Hyundai Rotem|10.199.33.77|254096|2012-11-15 16:46:29

TECHNICAL DATA :

1. SPEAKER
   1) IMPEDANCE : 8ohm ±15%
   2) POWER RATING : 25W
   3) SOUND PRESSURE LEVEL : 93±2dB
   4) RESONANCE FREQUENCY : 200Hz±50Hz
   5) FREQUENCY RANGE : 200~13KHz
2. WEIGHT : 1.9kg
3. SURFACE TREATMENT
   1) ITEM : NO. 1,2
      - COLOR : BLACK
      - COLOR CODE : UT-721N TOP N-1.5,G20
      - MAKER : PPG
   2) ITEM : NO. 3
      - S/TREATMENT : Zn PLATING

NOTE

1. BOLT TYPE DESCRIPTION
   (12-1)
   ITEM NO.
2. EMC GASKET LENGTH DESCRIPTION
   (11)-255mm
   LENGTH
   ITEM NO.

NO.	TYPE	SIZE	Q'TY
12-1	ROUND HEAD BOLT	M3xL8	4
	SPRING WASHER	M3x∅5x t0.8	4
	FLAT WASHER	M3x∅5.8x t0.5	4
12-2	ROUND HEAD BOLT	M3xL14	2
	SPRING WASHER	M3x∅5x t0.8	2
	FLAT WASHER	M3x∅5.8x t0.5	2
12-3	FLAT HEAD SCREW	M3xL8	4

품번 GROUP NO.					품번 ITEM	품명 DESCRIPTION	사양 SPEC	도면번호 DWG NO.	-	품번별 수량	생략, 길이 폭 x 길이	표면처리 S/TREATMENT
				1	1	FRONT PANEL	A365-91, t2.2	R1D000408				PAINTING
				1	2	REAR COVER	A365-91, t1	R1D000408				PAINTING
				1	3	BRACKET	A365-91, t1.2	R1D000407				Zn PLATING
				1	4	SPEAKER	8F-4036C,AMB ELECTECH	R1D000406				
				1	5	WIRE MESH	30488,8CRUEEN 8#0, t0.3	R1D000448	-	01		
				1	6	SHEET	30488,t0.7	R1D000449	-	02		
				1	7	CONNECTOR	231-603/019-000, WAGO					
				1	8	CONNECTOR	231-103/037-000, WAGO					
				1	9	NAME LABEL	AL_t=1	R1D000452	-	13		
				1	10	RUBBER GROMMET	EPDM, ∅18mm(0.59inch)	R1D000397				
				2	11	EMC GASKET	SF060010R-C-NA-A, E-SONG					
				1	12	BOLT & WASHER LIST	ASSY					
				1	13	GASKET	RUBBER,t6.0	R1D000410				
				1	14	CSP WIRING DIAGRAM	ASSY	R1D000499				

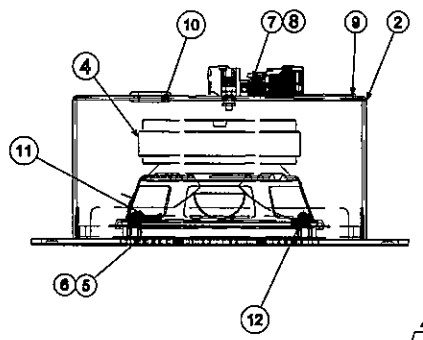

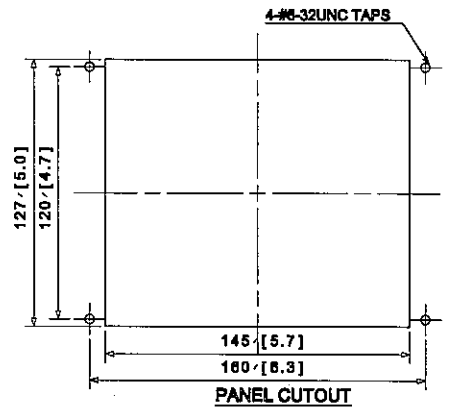

PANEL CUTOUT

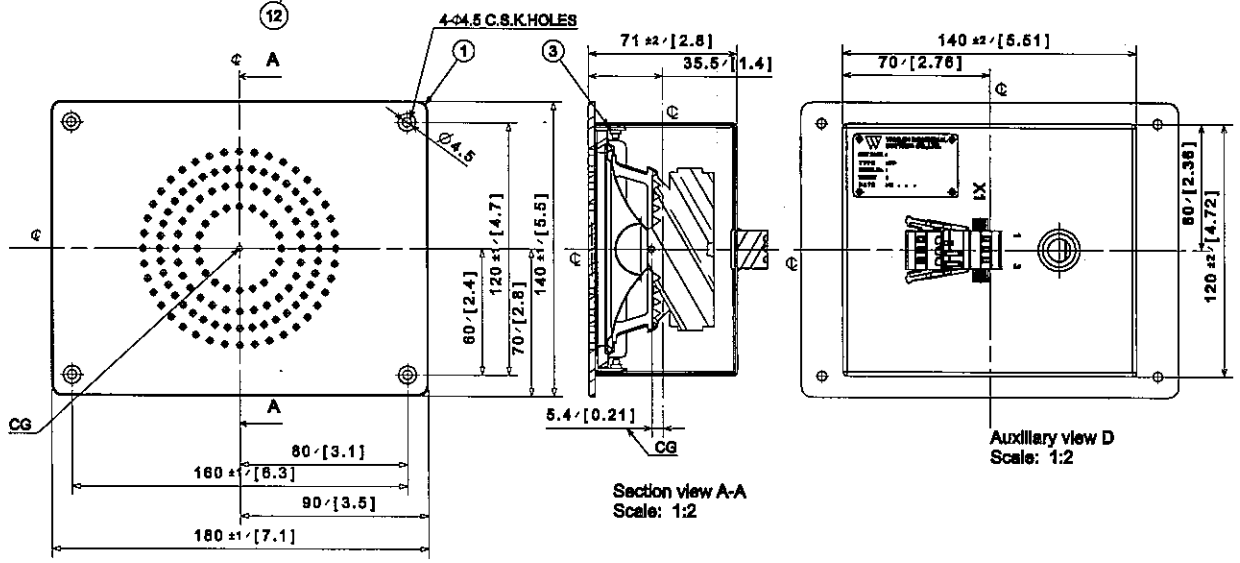

Section view A-A
Scale: 1:2

Auxiliary view D
Scale: 1:2

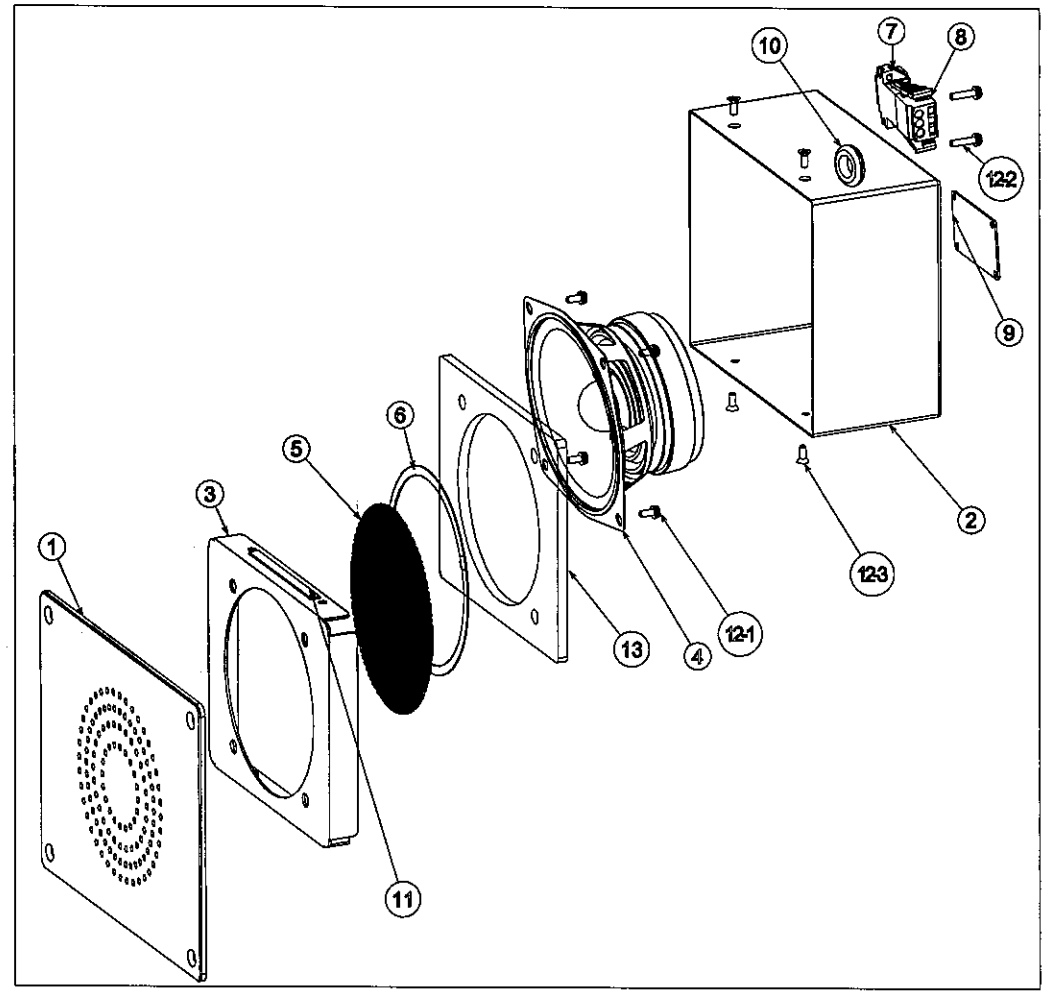

두께 THICKNESS			
	~ 40	2	4
	~ 30	2	3
	~ 10	1	1.5
	< 3	0.5	1
길이 LENGTH	~3150	-	7
	~1600	4	5
	~800	3	4
	~400	2	3
	~200	1.5	2
	~100	1	1.5
등급 GRADE		A	B
주조, 주강품 CASTING (±)			
~20M	8	14	24
~15M	7	12	21
~12M	6	10	18
~8M	5	8	14
~4M	4	6	11
~2M	3	4	8
~1M	2	3	6
~315	1	2	4
~120	1	2	3
~30	1	1	1
등급 GRADE		A	B	C
용접 구조물 WELDING (±)				
~20M	-	6.0	6.0
~15M	-	5.0	7.0
~12M	-	4.0	6.0
~8M	-	3.0	5.0
~4M	0.8	2.0	4.0
~2M	0.5	1.2	3.0
~1M	0.3	0.8	2.0
~315	0.2	0.5	1.2
~120	0.15	0.3	0.8
~30	0.1	0.2	0.5
3~6	0.05	0.1	0.2
등급 GRADE		A	B	C
기계 가공품 MACHINING (±)				
규정되지않은 일반공차표 GENERAL TOLERANCE				

개정 CHANGE				
2012.07.16	K.Y.SHIN	A	B.J.JONE	A
Redrawing 1) Wire mesh, 2 Pcs deleted. 2) Pitch, t, Shape changed.				
2012.08.12	K.Y.SHIN	B	B.J.JONE	B
Redrawing 1) Speaker dimension changed. 2) Bracket shape changed. 3) Gasket shape changed. 4) Hooked shape changed.				

설계MEMO				
DIM. IN mm	작성일 DATE	2011.09.30	승인 APPROVED	B.J.JONE
척도 SCALE	작성 DRAWN	B.H.KANG		
1 / 2	설계 DESIGNED	-		
금차 적용기준 : WM8 C 40201	검토 CHECKED	J.Y.LEE		

WOOJIN Industrial Systems Co., Ltd.

DENVER RTD FASTRACKS

CAB SPEAKER ASS'Y

R1D1473-25858 B

품번 NO.	부품 번호 PART NO.	품명 DESCRIPTION	재질 MATERIAL	수량 Q'TY	중량 W.T	비고 REMARKS
승인 APP	S.H.PARK 2011.03.25	재질 MAT'L ASSY	명칭 TITLE	CAB SPEAKER		
검도 CHK	C.Y.LEE 2011.03.17	총중량 G.W 4.3 lbs				
설계 DGN	Y.S.JEON 2011.03.11	일반공차 MC WD CT	도면번호 DRG. NO	RES18001CT0	Ver. 00 / Rev. -D	RNE1002
제도 DRG		B / SIZE C	SCALE N/S	매수 SHEET 1 of 1		년-PRJT
		참고번호 REF. NO.	HYUNDAI Rotem 현대로템주식회사			정리번호

기호 MARK	일자 DATE	변경내역 DETAIL OF REVISION(E.C ZONE)	설변번호 E.C NO.	설계 DGN	검도 CHK	승인 APP
Dx1	2012.07.16	The Output holes are rearranged.	RNE1002-U144	Y.S.JEON	C.Y.LEE	S.H.PARK
Cx1	2012.03.15	Customer request to delete volume control.		Y.S.JEON	C.Y.LEE	S.H.PARK
Bx1	2012.01.05	The supplier revised painting spec.		Y.S.JEON	C.Y.LEE	S.H.PARK
Ax1	2011.10.25	The supplier revised the drawing for FDR		Y.S.JEON	C.Y.LEE	S.H.PARK

본 도면은 당사 재산으로서 외부에 무단복사/배포 금지됨. PROPERTY OF ISSUING ENTITY. CANNOT BE DISTRIBUTED OR REPRODUCED WITHOUT AUTHORIZATION.

CATIA

Hyundai Rotem 254096 2012-09-28 11:49
Hyundai Rotem|10.199.35.77|254096|2012-09-13 18:35:20

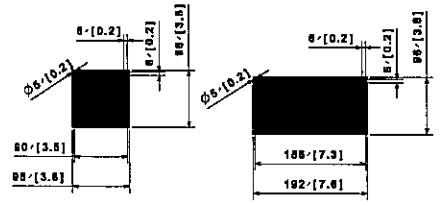

EXAMPLE OF LDM DISPLAY

EXAMPLE OF LDM DISPLAY

TECHNICAL DATA :

1. INPUT VOLTAGE : AC230V (AC180V-260V)
2. CURRENT CONSUMPTION TYP. :
   1A(30%-ACTIVE, MEDIUM INTENSITY
3. CURRENT CONSUMPTION MAX. : 2A
4. INTERFACE : RS 485
5. COLOR OF LED : ORANGE
6. SURFACE TREATMENT
   1) ITEM : NO.1,2,18,25
      - COLOR : BLACK
      - COLOR CODE : UT-721N TOP N-1.5,G20
      - MAKER : PPG
   2) ITEM : NO.4
      - S/TREATMENT : Zn PLATING

LED MODULE DATA :

1. TYPE : LAMP TYPE LED DOT MATRIX TYPE
2. ACTIVE DISPLAY SIZE : 96mm·l x 96mm·W
3. NUMBER OF DOT : 16x16DOTS (256DOTS)
4. DISPLAY COLOR : RGB / AMBER COLOR
5. DOT SIZE : Ø5mm
6. DOT PITCH : 6mm
7. DUTY RATE : 1/16 DUTY DYNAMIC
8. WEIGHT : 180g (TYP)

NOTE

1. WEIGHT : ~~6.2kg~~ 5.5
2. BOLT TYPE DESCRIPTION
   (23) — ITEM NO.
3. EMC TAPE LENGTH DESCRIPTION
   (12)-341mm — LENGTH; ITEM NO.
4. NON-ASSIGNED CONNECTOR SHOULD BE FILLED WITH PLUG & SOCKET PINS.

NO.	TYPE	SIZE	Q'TY
23-1	FLAT HEAD BOLT	M3x1.8	2
23-2	HEXA HEAD BOLT	M5x1.16	4
	SPRING WASHER	M5x26.8x1.2	4
	FLAT WASHER	M5x012x1.0	4
23-3	ROUND HEAD BOLT	M4x1.6	7
	SPRING WASHER	M4x26.8x1.0	7
	FLAT WASHER	M4x07.8x0.8	7
23-4	ROUND HEAD BOLT	M3x1.8	66
	SPRING WASHER	M3x05x0.8	66
	FLAT WASHER	M3x26.8x0.5	66
23-5	ROUND HEAD BOLT	M4x1.8	12
	SPRING WASHER	M4x26.8x1.0	12
	FLAT WASHER	M4x07.8x0.8	12

X1 : CONNECTOR PIN ASSIGNMENT (ITHRF23-14S6F8)

NO.	ITEM
A	POWER VCC
B	
C	POWER GND
D	
E	TX1 +(R)
F	TX1 -(R)
G	TX1 SH(R)
H	
J	
K	
L	
M	
N	
P	
R	
S	
T	ADD 1
U	ADD 2
V	ADD GND

품번 NO.	품명 DESCRIPTION	재질 MATERIAL	수량 Q'TY	중량 W.T	비고 REMARKS
1	MAIN CASE	A356-91, 11.3/6.3			PAINTING
2	COVER	A351-CD, 11.2			PAINTING
3	HIGH LED X SMART ASSY MODULE	CDFLM-R60CY-13A1, CD-TECH			
4	LED BRACKET	A356-91, 11.2			Zn PLATING
5	POWER CONVERTER BOARD	VICOR, YMS			
6	LED CONTROL BOARD	PCB, YMS			
7	CONNECTOR	ITHRF23-14S6F8(HELENAR)			
8	CONNECTOR	ITHRF23-14P2S6F8(HELENAR)			
9	RGB LED X SMART ASSY MODULE	CDTLM-R60CF-16S1, CD-TECH			
10	RUBBER BUSHSET	EPDM, 400mm(1.0 inch)			
11	BASE PLATE	AL-1			
12	EMC TAPE	SPS0010R-C-NA-4, E-SONG	1	50	
13	PHILLIPS RIVORS	DS-010-713-100			
14	RECEPTACLE SLIP ON	DS-000-000-100			
15	RECEPTACLE SLIP X	DS-000-101-200			
16	SMX CPU HEAD SHIELDER	DS-379-001-040			
17	EJECTOR SPRING STAINLESS	DS-SP6-S-000-GA			
18	BRACKET	A356-91, 11.2			PAINTING
19	LIGHT SENSOR	LED2 BOARD, YMS			
20	RUBBER TUBE	JIS(FC)C1100(HELENAR)			
21	HINGE ASSY	[illegible]			
22	DUST COVER	-			
23	BOLT & WASHER LIST	ASSY			
24	GROMMET BRACKET	A356-91, 11.2			
25	BRACKET	A356, 11.2			PAINTING
26	STICKER	ASSY	1	10	
27	FSI WIRING DIAGRAM	ASSY			
28	LIGHT SENSOR BRACKET	A356-91,11.2			

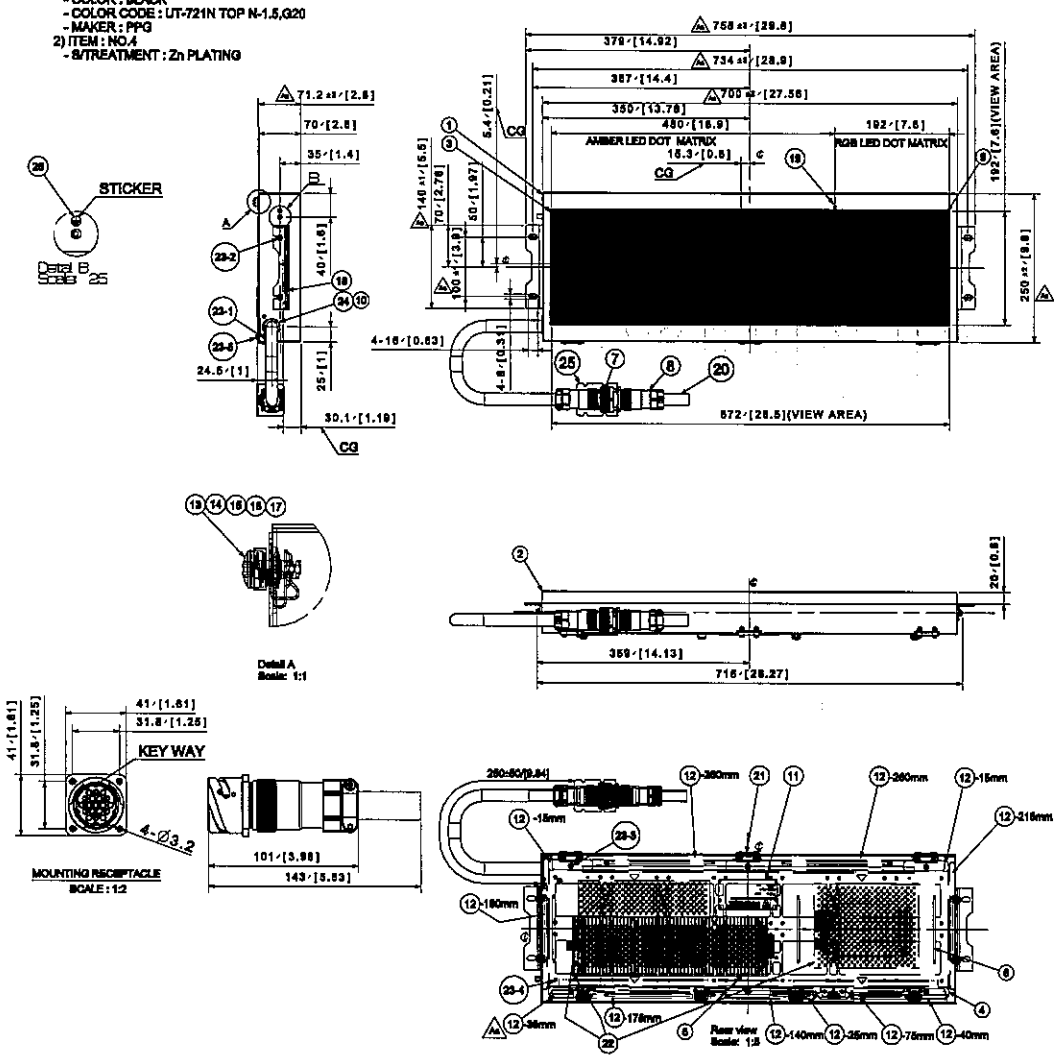

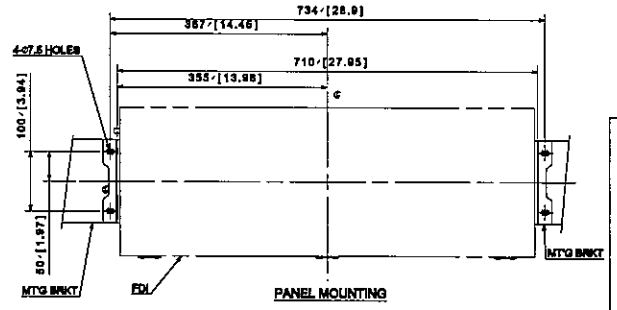

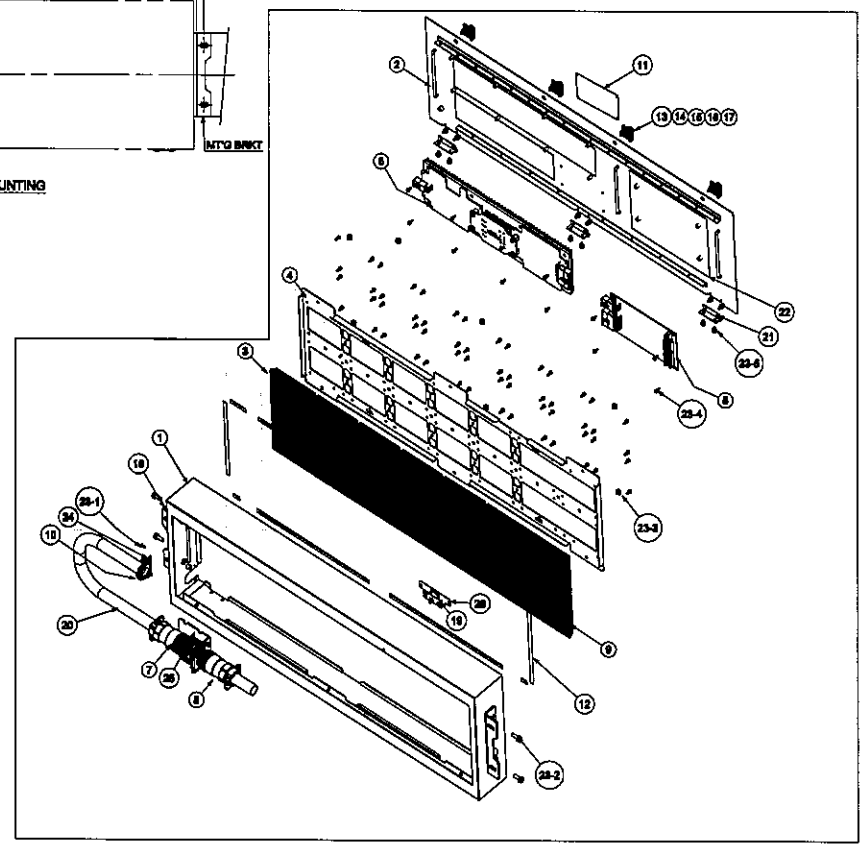

기호 MARK	일자 DATE	변경내역 DETAIL OF REVISION(E.C ZONE)	설변번호 E.C NO.	설계 DGN	검도 CHK	승인 APP
Cx1	2012.03.15	The supplier revised the weight and Dim.	RNE1002-U090	Y.S.JEON	C.Y.LEE	S.H.PARK
Bx1	2012.01.05	The supplier revised the painting Spec.		Y.S.JEON	C.Y.LEE	S.H.PARK
Ax1	2011.10.25	The supplier revised the drawing for FDR		Y.S.JEON	C.Y.LEE	S.H.PARK

승인 APP	S.H.PARK 2011.03.25	재질 MAT'L ASSY	품명 TITLE: FRONT DESTINATION INDICATOR
검도 CHK	C.Y.LEE 2011.03.17	총중량 G.W 20.0 lbs	
설계 DGN	Y.S.JEON 2011.03.11	원본 공차 MC WD CT: B	도면번호 DRG. NO: RES21001CT0
제도 DRG		SIZE: C	SCALE: N/S; 매수 SHEET 1 of 1; Ver. 00; Rev. -C

참조번호 REF. NO.

HYUNDAI Rotem 현대로템주식회사

RNE1002 — 년-PRJT — 정리번호

DENVER RTD FASTRACKS

LED FRONT DESTINATION SIGN

R1D1473-25849 A2

WOOJIN

DIM. IN mm | 제도 SCALE 1 / 6 | 작도 DRAWN 2011.08.30 B.H.KANG | 설계 DESIGNED - | 검토 CHECKED J.Y.LEE | 승인 APPROVED S.J.JONE

설계MEMO

기계	~ 40	2	4
	~ 30	2	3
	~ 10	1	1.5
	< 3	0.5	1
길이 LENGTH	~3150	-	7
	~1600	4	5
	~800	3	4
	~400	2	3
	~200	1.5	2
	~100	1	1.5
등급 GRADE		A	B
단조, 주조품 CASTING (±)			
	~20M	8	14	24
	~15M	7	12	21
	~12M	6	10	18
	~8K	5	8	14
	~4K	4	6	11
	~2M	3	4	8
	~1M	2	3	6
	~315	1	2	4
	~120	1	2	3
	~30	1	1	1
등급 GRADE		A	B	C
용접 구조물 WELDING (±)			
	~20M	-	6.0	8.0
	~15M	-	5.0	7.0
	~12K	-	4.0	6.0
	~8K	-	3.0	5.0
	~4K	0.8	2.0	4.0
	~2K	0.5	1.2	3.0
	~1M	0.3	0.8	2.0
	~315	0.2	0.5	1.2
	~120	0.15	0.3	0.8
	~30	0.1	0.2	0.5
	3~6	0.05	0.1	0.2
등급 GRADE		A	B	C
기계 가공품 MACHINING (±)			
규정되지않은 일반공차표 GENERAL TOLERANCE			

Hyundai Rotem 254096 2012-05-14 12:36
Hyundai Rotem|10.198.33.77|254096|2012-05-15 16:49:13

본 도면은 당사 지적재산권의 유일한 소유물로서 무단복사 및 배포 금지됨. PROPERTY OF ISSUING ENTITY. CANNOT BE DISTRIBUTED OR REPRODUCED WITHOUT AUTHORIZATION.

CATIA

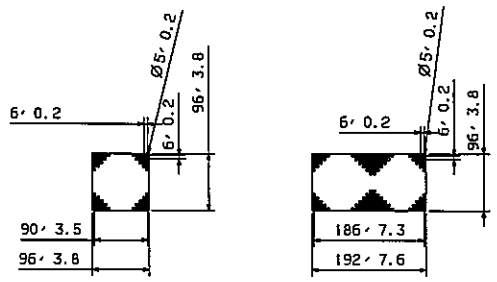

SAMPLE OF LDM DISPLAY

LED MODULE DATA
1. TYPE: Lamp Type LED Dot MAtrix Type
2. ACTIVE DISPLAY SIZE : 96mmH x 96mmW
3. NUMBER OF DOT : 16x16 Dots (256 Dots)
4. DISPLAY COLOR : AMBER / RGB Colors
5. SIZEØ 5mm
6. DOT PITCH : 6mm
7. DUTY RATE : 1/16 Duty Dynamic
8. WEIGHT : 160g (Typ)

NOTE
1. WEIGHT : 10.5 kg
2. BOLT TYPE DESCRIPTION
   (21) — Item no.
3. EMC TAPE LENGTH DESCRIPTION
   (19) — 341mm — LENGTH
   Item no.
4. Non-assigned connector should be fitted with plug.

TECHNICAL DATA
1. INPUT VOLTAGE : AC230V (AC180V - 260V)
2. CURRENT CONSUMPTION TYP.:
   1A / 30% ACTIVE, MEDIUM INTENSITY
3. CURRENT CONSUMPTION max.: 2 A
4. INTERFACE:RS 485
5. COLOR OF HOUSING: BLACK, POWDER COATED
6. COLOR OF LED: AMBER/RGB
7. SURFACE TREATMENT
   1) ITEM : NO.1,2,4,20
      - COLOR : BLACK
      - COLOR CODE : UT-721N TOP N-1.5,020
      - MAKER : PPG
   2) ITEM : NO.5
      - S/TREATMENT : Zn PLATING

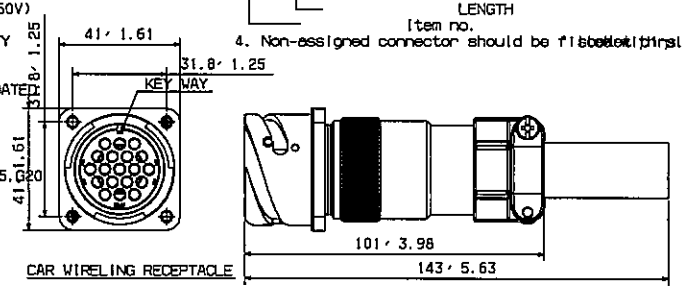

CAR WIRELING RECEPTACLE

NO.	TYPE	SIZE	Q'TY
21-1	ROUND HEAD BOLT	M3XL6	6
	SPRING WASHER	M3XØ5Xt0.8	
	FLAT WASHER	M3XØ5.8Xt0.5	
21-2	ROUND HEAD BOLT	M3XL8	40
	SPRING WASHER	M3XØ5Xt0.8	
	FLAT WASHER	M3XØ7.8Xt0.5	
21-3	ROUND HEAD BOLT	M3XL8	8
	SPRING WASHER	M3XØ5Xt0.8	
	FLAT WASHER	M3XØ7.8Xt0.5	
21-4	ROUND HEAD BOLT	M4XL6	2
	SPRING WASHER	M4XØ5.8Xt1.0	
	FLAT WASHER	M4XØ7.8Xt0.8	
21-5	ROUND HEAD BOLT	M4XL6	10
	SPRING WASHER	M4XØ5.8Xt1.0	
	FLAT WASHER	M4XØ10Xt0.8	
21-6	ROUND HEAD BOLT	M4XL8	22
	SPRING WASHER	M4XØ5.8Xt1.0	
	FLAT WASHER	M4XØ7.8Xt0.8	
21-7	HEXA HEAD BOLT	M5XL16	4
	SPRING WASHER	M5XØ8.8Xt1.2	
	FLAT WASHER	M5XØ12Xt1.8	
21-8	FLAT HEAD BOLT	M3XL8	4

X1: CONNECTOR PIN ASSIGMENT
1TH06F22-14S80F6

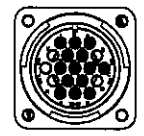

NO.	ITEM
A	POWER VCC
B	
C	POWER GND
D	
E	TX1 +(In)
F	TX1 -(In)
G	TX1 SH(In)
H	
J	
K	
L	ADD 1
M	ADD 2
N	ADD 3
P	ADD 4
R	ADD 5
S	ADD 6
T	ADD 7
U	ADD 8
V	ADD GND

GROUP NO.				ITEM	DESCRIPTION	SPEC	DWG NO.			S/TREATMENT
			1	1	FRAME	AS11-CO, t1.2	R1B000081			PAINTING
			1	2	COVER	AS11-CO, t1.2	R1B000080			PAINTING
			4	3	HINGE	304SS,CH-8-1038	R1D006389			
			8	4	INSTALL BRACKET	AS99, t3.2	R1D006334			PAINTING
			1	5	LED BRACKET	A356-T1, t1	R1B000028			Zn PLATING
			6	6	AMBER LED ELEMENT ASSEY MODULES	DOTLH-096CY-15A1, CO-TECH	R1C006320			
			1	7	LED CONTROL BOARD	PCB, V18	R1C006384			
			1	8	CONNECTOR	1TH06F22-14S80F6/GLENAIR				
			1	9	CONNECTOR	1TH06F22-14P6S01F6/ GLENAIR				
			1	10	POWER BOARD	V1COPL V18	R1D006385			
			1	11	RGB COLOR LED DOT MATRIX	DOTLH-096CF-1681, CO-TECH	R1D006338			
			1	12	NAME PLATE	AL,t=1	R1D000462	-	04	
			1	13	RUBBER GROMMET	EPDM, Ø22mmt1.8 inch	R1D000451			
			4	14	PHILLIPS RECESS	03-318-713-190				
			4	15	RECEPTACLE SLIP OH	03-305-330-190				
			4	16	RECEPTACLE SLIP N	03-305-101-200				
			4	17	EMI CPLI HOOD ASSEMBLIES	03-376-001-049				
			4	18	ELECTRO SPRING SILICONE	04-8475-3-360-GR				
			13	19	EMC GASKET	SP9000108-0-NR-A, E-conp				
			1	20	BRACKET	AMS, t2.0	R1C006383			PAINTING
			1	21	BOLT & NUT LIST	AMS'Y				
			1	22	LIGHT SENSOR	LSCB BOARD, V18	R1C006388			
			1	23	RUBBER TUBE	#18,P4C20:190MM/GLENAIR				
			1	24	GROMMET BRACKET	A356-T1, t1	R1D006367			
			1	25	GROMMET BRACKET	A356-T1, t1	R1D006333			
			1	26	STICKER	MAK'Y	R1D006468	-	19	
			1	27	SCI WIRING DIAGRAM	AMS'Y	R1D006444			
			1	28	LIGHT SENSER BRACKET	A356-T1, t1	R1D006877			

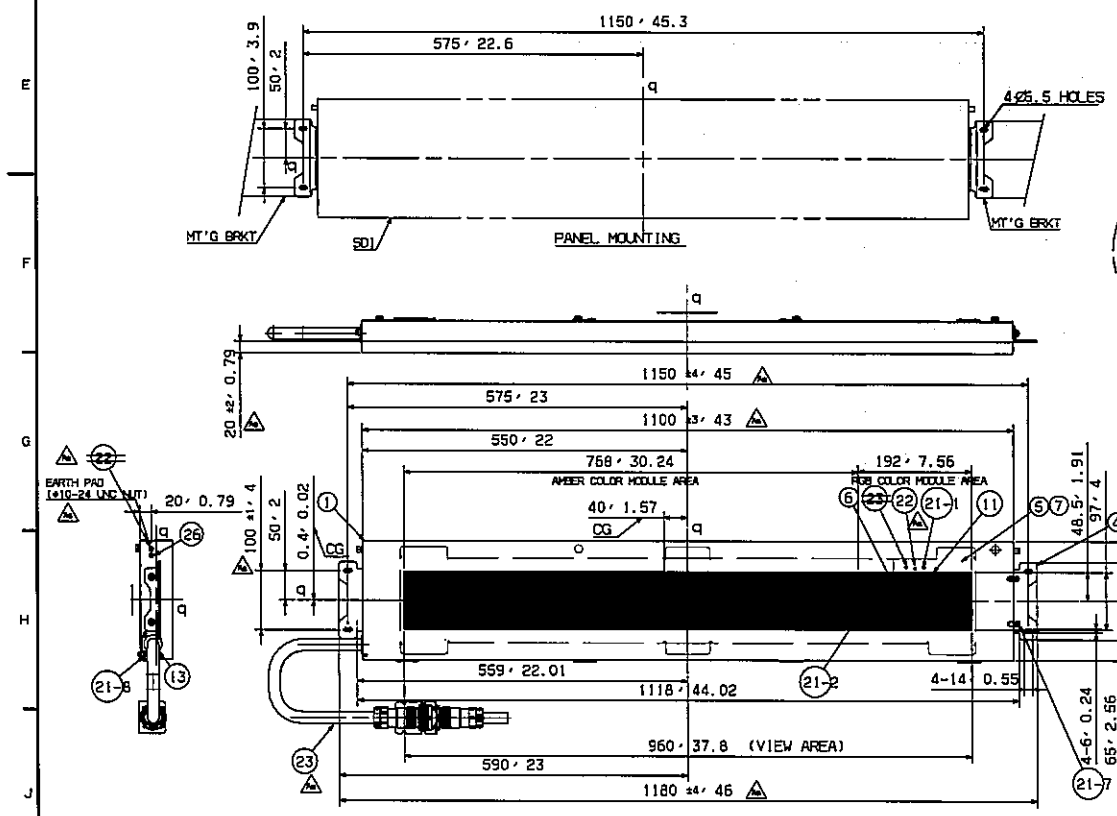

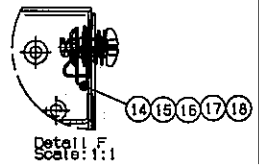

Detail F
Scale: 1:1

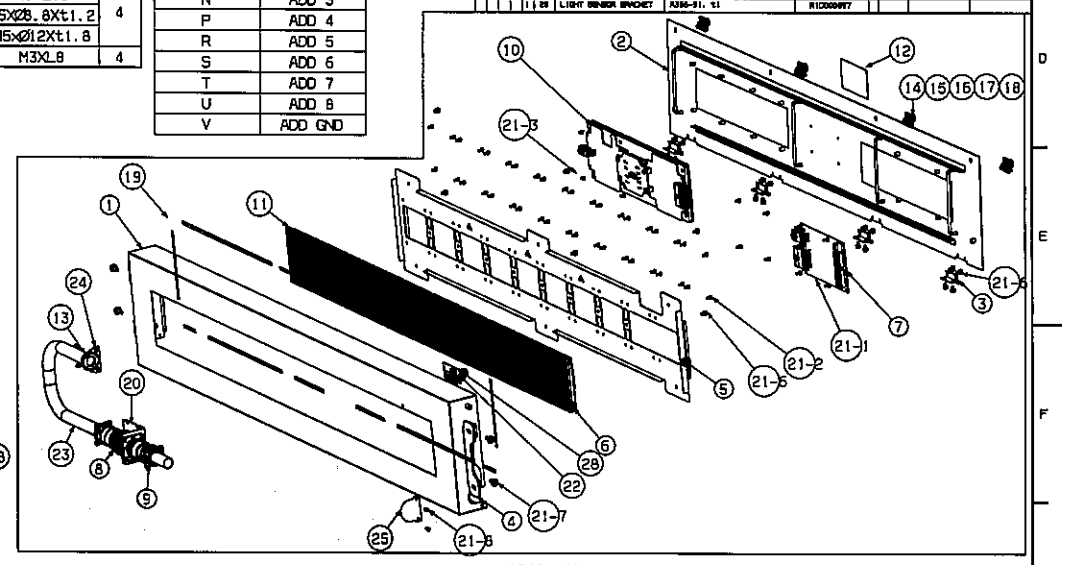

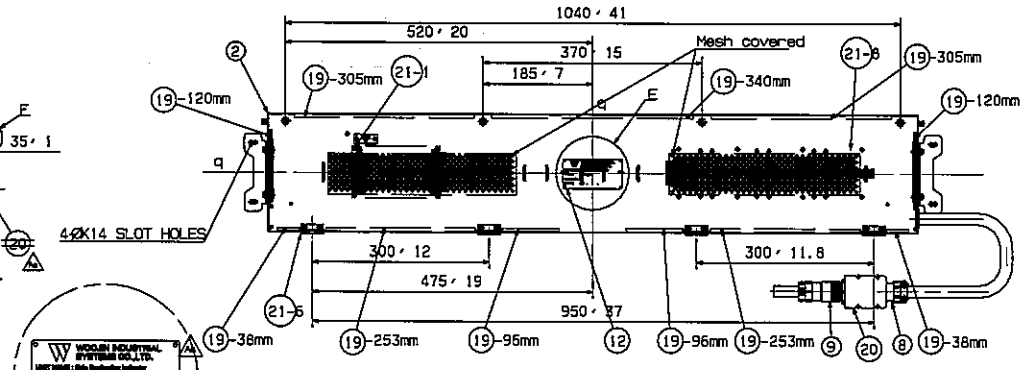

Detail E
Scale: 1:2

MARK	DATE	DETAIL OF REVISION(E.C ZONE)	설변번호 E.C NO.	설계 DGN	검도 CHK	승인 APP
Dx1	2012.07.25	Added the S.N of the Left Type.	RNE1002-U144	Y.S.JEON	C.Y.LEE	S.H.PARK
Cx1	2012.03.15	Separated from L/R mated drawing.		Y.S.JEON	C.Y.LEE	S.H.PARK
Bx1	2012.01.05	The supplier revised the painting Spec.		Y.S.JEON	C.Y.LEE	S.H.PARK
Ax1	2011.10.25	The supplier revised the drawing for FDR		Y.S.JEON	C.Y.LEE	S.H.PARK

WOOJIN INDUSTRIAL SYSTEMS CO.,LTD.
DENVER RTO FASTRACKS
LED SIDE DESTINATION SIGN-1
DIM. IN mm | DATE 2011.10.07 | APPROVED B.J.JONE
SCALE 1 / 5 | DRAWN B.H.KANG | DESIGNED - | CHECKED J.Y.LEE
R1D1473-25850 | Ab

품번 NO.	부품 번호 PART NO.	품명 DESCRIPTION	재질 MATERIAL	수량 Q'TY	중량 W.T	비고 REMARKS
승인 APP	S.H.PARK 2011.03.25	재질 MAT'L ASSY				
검도 CHK	C.Y.LEE 2011.03.17	총중량 G.W 23.4 lbs				
설계 DGN	Y.S.JEON 2011.03.11					
제도 DRG						

TITLE: SIDE DESTINATION INDICATOR, LEFT SIDE
DRG. NO: RES22001CT0 | Ver. 00 | Rev. -D | RNE1002
SCALE N/S | 매수 SHEET 1 of 1 | SIZE 0
HYUNDAI Rotem 현대로템주식회사
CATIA

Hyundai Rotem 254096 2012-09-28 11:49
Hyundai Rotem|10.196.33.77|254096|2012-10-15 18:36:01

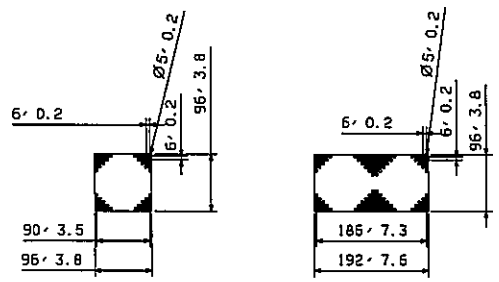

SAMPLE OF LDM DISPLAY

LED MODULE DATA
1. TYPE: Lamp Type LED Dot MAtrix Type
2. ACTIVE DISPLAY SIZE : 96mmH x 96mmW
3. NUMBER OF DOT : 16x16 Dots (256 Dots)
4. DISPLAY COLOR : AMBER / RGB Colors
5. SIZE Ø 5mm
6. DOT PITCH : 6mm
7. DUTY RATE : 1/16 Duty Dynamic
8. WEIGHT : 160g (Typ)

NOTE
1. WEIGHT : 10.5 kg
2. BOLT TYPE DESCRIPTION
(21) — Item no.
3. EMC TAPE LENGTH DESCRIPTION
(19)-341mm — LENGTH, Item no.
4. Non-assigned connector should be fisbelletthinplug

TECHNICAL DATA
1. INPUT VOLTAGE : AC230V (AC180V - 260V)
2. CURRENT CUNSUMPTION TYP.:
   1A / 30% ACTIVE, MEDIUM INTENSITY
3. CURRENT CONSUMPTION max.: 2 A
4. INTERFACE:RS 485
5. COLOR OF HOUSING: BLACK, POWDER COATED
6. COLOR OF LED: AMBER/RGB
7. SURFACE TREATMENT
   1) ITEM : NO.1,2,4,20
      - COLOR : BLACK
      - COLOR CODE : UT-721N TOP N-1.5,G20
      - MAKER : PPG
   2) ITEM : NO.5
      - S/TREATMENT : Zn PLATING

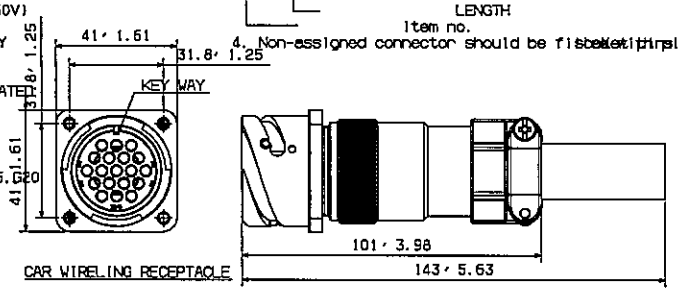

CAR WIRELING RECEPTACLE

NO.	TYPE	SIZE	Q'TY
21-1	ROUND HEAD BOLT	M3XL6	6
	SPRING WASHER	M3XØ5.8Xt0.8	
	FLAT WASHER	M3XØ5.8Xt0.5	
21-2	ROUND HEAD BOLT	M3XL8	40
	SPRING WASHER	M3XØ5.8Xt0.8	
	FLAT WASHER	M3XØ5.8Xt0.5	
21-3	ROUND HEAD BOLT	M3XL8	8
	SPRING WASHER	M3XØ5.8Xt0.8	
	FLAT WASHER	M3XØ7.8Xt0.5	
21-4	ROUND HEAD BOLT	M4XL6	2
	SPRING WASHER	M4XØ5.8Xt1.0	
	FLAT WASHER	M4XØ7.8Xt0.8	
21-5	ROUND HEAD BOLT	M4XL6	10
	SPRING WASHER	M4XØ5.8Xt1.0	
	FLAT WASHER	M4XØ10Xt0.8	
21-6	ROUND HEAD BOLT	M4XL8	22
	SPRING WASHER	M4XØ5.8Xt1.0	
	FLAT WASHER	M4XØ7.8Xt0.8	
21-7	HEXA HEAD BOLT	M5XL16	4
	SPRING WASHER	M5XØ8.8Xt1.2	
	FLAT WASHER	M5XØ12Xt1.8	
21-8	FLAT HEAD BOLT	M3XL8	4

X1: CONNECTOR PIN ASSIGMENT
1TH05F22-14S80F6

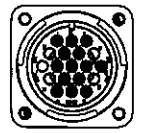

NO.	ITEM
A	POWER VCC
B	
C	POWER GND
D	
E	TX1 +(In)
F	TX1 -(In)
G	TX1 SH(In)
H	
J	
K	
L	ADD 1
M	ADD 2
N	ADD 3
P	ADD 4
R	ADD 5
S	ADD 6
T	ADD 7
U	ADD 8
V	ADD GND

SHIP NO.				ITEM	DESCRIPTION	SPEC	DWG NO.				S/TREATMENT
			1	1	FRAME	ADC1-CD, t1.2	RID000021				PAINTING
			1	2	COVER	ADC1-CD, t1.2	RID000020				PAINTING
			4	3	HINGE	304SS, DK-B-1536	RID000309				
			2	4	INSTALL BRACKET	ABS5, t3.2	RID000334				PAINTING
			1	5	LED BRACKET	A356-T1, t1	RID000022				Zn PLATING
			2	6	AMBER LED ELEMENT ASSY,SEALING	CDTLH-096CY-1(AI), ED-TECH	RID000303				
			1	7	LED CONTROL BOARD	PCBL V15	RID000304				
			1	8	CONNECTOR	1TH05F22-14S80F6/SLIM+AIR					
			1	9	CONNECTOR	1TH05F22-14P80F6/ SLIM+AIR					
			1	10	POWER BOARD	VICOR,V15	RID000303				
			1	11	RGB COLOR LED DOT MATRIX	CDTLH-096CF-1(RI), ED-TECH	RID000232				
			1	12	NAME PLATE	AL,t=1	RID000408	-	84		
			4	13	RUBBER GROMMET	EPDM, Ø8mm(1.8 thk)	RID000401				
			4	14	PHILLIPS PRESSS	D3-315-713-190					
			4	15	RECEPTACLE SLIP ON	D3-306-330-190					
			4	16	RECEPTACLE SLIP K	D3-326-101-800					
			4	17	PIN CRIMPED 8AWG,18AWG	D3-375-001-045					
			4	18	ELECTRIC SPRING STAINLESS	D4-BSFS-3-986-GA					
			33	19	EMC GASKET	EF2000120-C-HN-A, E-wang					
			1	20	BRACKET	ABS5, t2.0	RID000381				PAINTING
			1	21	BOLT & NUT LIST	ASS'Y					
			1	22	LIGHT BRIDGE	LED8 BOARD, V15	RID000305				
			1	23	RUBBER TUBE	ø5.9,M=2011900M+/SLIM+AIR					
			1	24	GROMMET BRACKET	A356-T1, t1	RID000327				
			1	25	GROMMET BRACKET	A356-T1, t1	RID000333				
			1	26	STICKER	ASS'Y	RID000402	-	19		
			1	27	RGB VIRGIN DIAGRAM	ASS'Y	RID000444				
			1	28	LIGHT BRIDGE BRACKET	A356-T1, t1	RID000337				

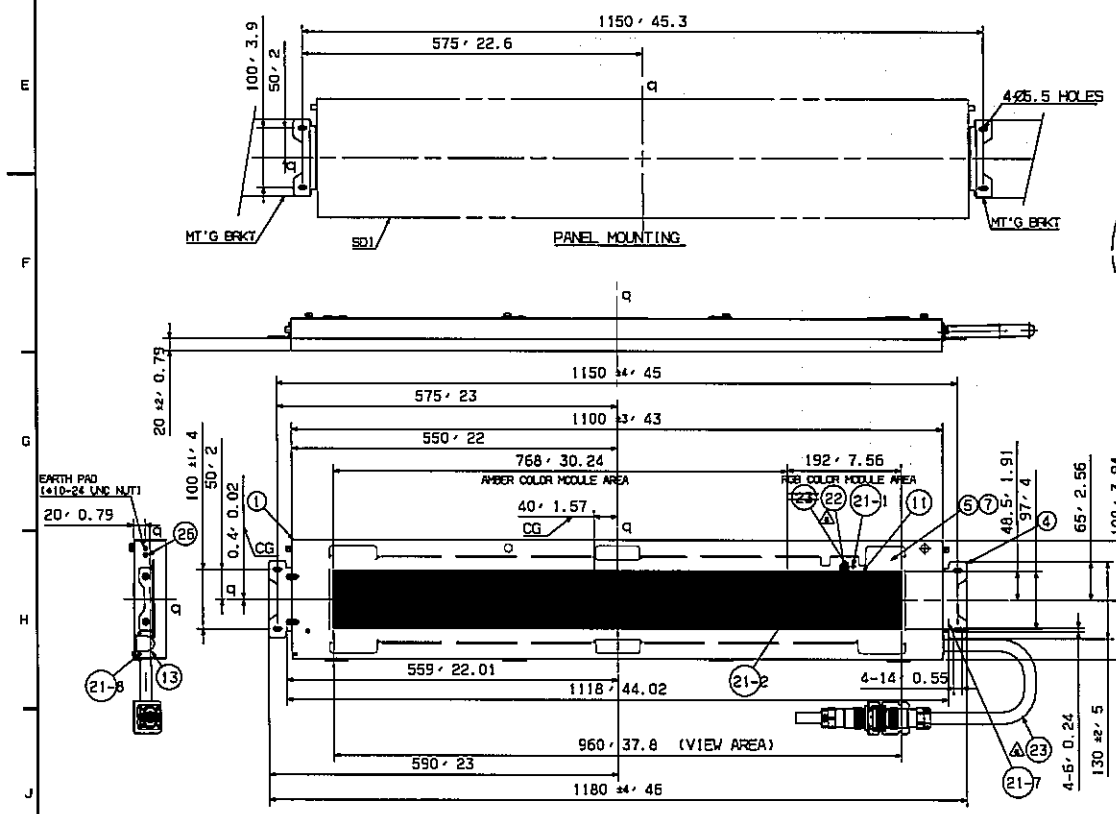

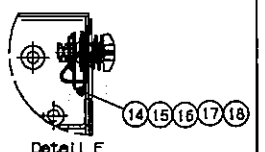

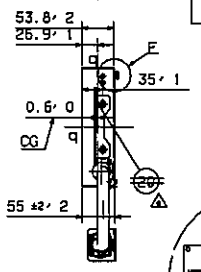

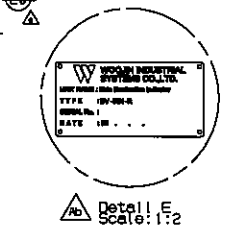

Detail E
Scale:1:2

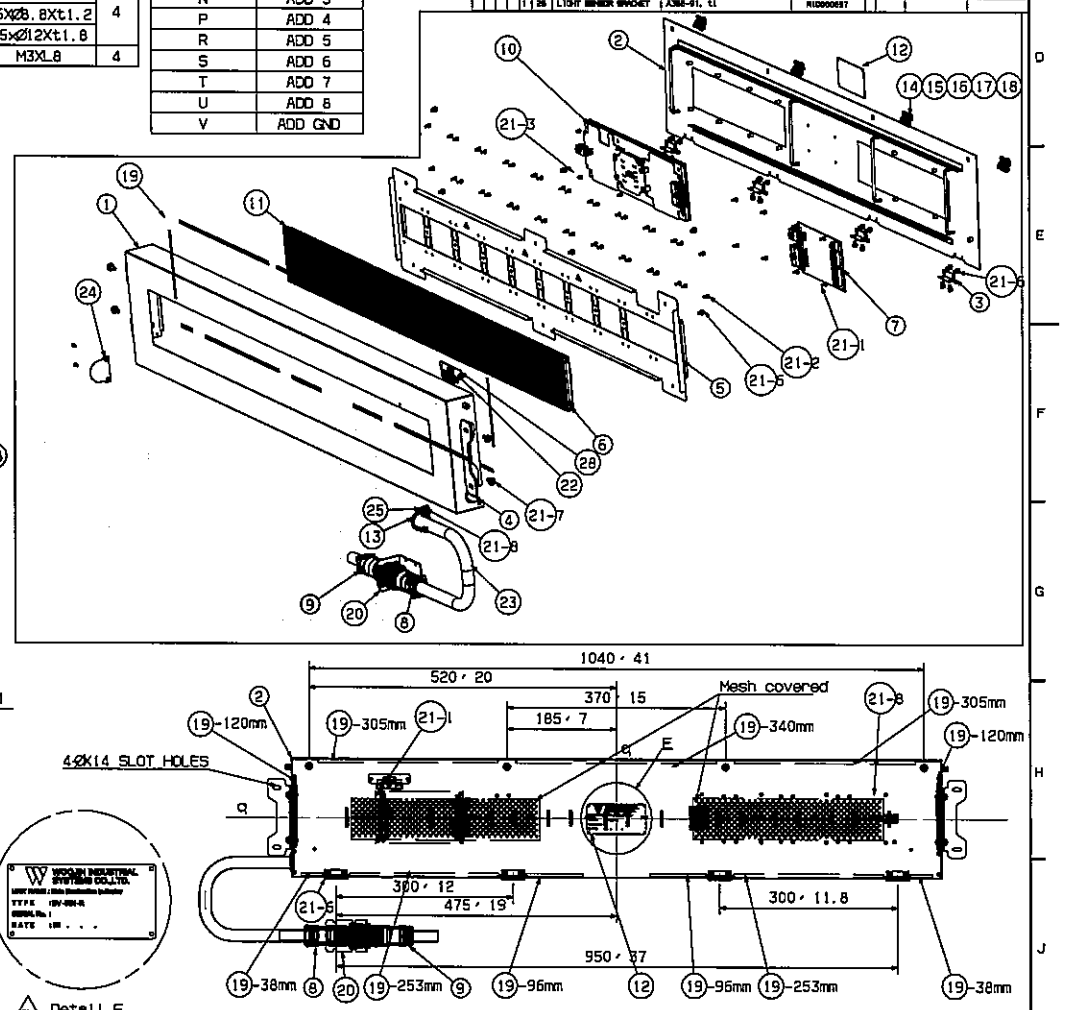

DIM. IN	DATE	2011.10.07	APPROVED
SCALE	DRAWN	B.H.KANG	
1 / 5	CHECKED	-	B.J.JONE
: MB C 42201	D-APPROVED	J.Y.LEE	

DENVER RTD FASTRACKS
LED SIDE DESTINATION SIGN-2
RID001117 b

기호 MARK	일자 DATE	변경내역 DETAIL OF REVISION(E.C ZONE)	설변번호 E.C NO.	설계 DGN	검도 CHK	승인 APP
Ax1	2012.07.25	Added the S.N of the Right Type.	RNE1002-U144	Y.S.JEON	C.Y.LEE	S.H.PARK

품번 NO.	부품 번호 PART NO.	품명 DESCRIPTION	재질 MATERIAL / 수량 Q'TY / 중량 W.T / 비고 REMARKS
승인 APP	S.H.PARK 2012.03.15	재질 MAT'L ASSY	
검도 CHK	C.Y.LEE 2012.03.14	총중량 G.W 23.4 lbs	TITLE: SIDE DESTINATION INDICATOR, RIGHT SIDE
설계 DGN	Y.S.JEON 2012.03.13		도면 번호 DRG. NO: RES22002CT0
제도 DRG			SCALE N/S · 매수 SHEET 1 of 1 · SIZE D · Ver. 00 · Rev. -A · RNE1002

HYUNDAI Rotem 현대로템주식회사

본 도면은 현대로템의 재산이며 무단복제/배포 금지. PROPERTY OF HYUNDAI ROTEM. CANNOT BE DISTRIBUTED OR REPRODUCED WITHOUT AUTHORIZATION. CATIA

Hyundai Rotem 254096 2012-09-28 11:49
Hyundai Rotem|10.199.33.77|254096|2012-10-15 18:36:40

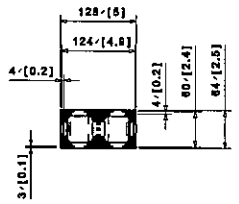

SAMPLE OF LDM DISPLAY

LED MODULE DATA

1. TYPE: CHIP TYPE LED DOT MATRIX TYPE
2. ACTIVE DISPLAY SIZE : 64mmH x 128mmW
3. NUMBER OF DOT : 16x32 Dots (512 Dots)
4. DISPLAY COLOR : AMBER COLOR
5. SIZE : Φ3mm
6. DOT PITCH : 4mm
7. DUTY RATE : 1/16 DUTY DYNAMIC
8. WEIGHT : 180g (TYP)

NOTE

1. WEIGHT : 8.5 kg
2. BOLT TYPE DESCRIPSION
   (19-1)
   ITEM NO.
3. EMC GASKET LENGHTH DESCRIPTION
   (20) -341mm
   LENGTH
   ITEM NO.
4. NON-ASSIGNED CONNECTOR SHOULD BE FILLED WITH PLUG & SOCKET PINS.
5. SURFACE TREATMENT
   1) ITEM : NO. 2,4
      - COLOR : BLACK
      - COLOR CODE : UT-721N TOP N-1.5,G20
      - MAKER : PPG
   2) ITEM : NO. 3
      - S/TREATMENT : Zn PLATING
   3) ITEM : NO. 1
      - S/TREATMENT : HAIRLINE #180

TECHNICAL DATA

1. INPUT VOLTAGE : 37.5VDC (24 - 48VDC)
2. CURRENT CONSUMPTION TYP.:
   4A / 30% ACTIVE, MEDIUM INTENSITY
3. CURRENT CONSUMPTION max. : 14 A
4. INTERFACE : RS 485
5. COLOR OF HOUSING : BLACK, POWDER COATED
6. COLOR OF LED : ORANGE

NO.	TYPE	SIZE	Q'TY
21-1	ROUND HEAD BOLT	M3x0.5	16
	SPRING WASHER	M3x1.0x0.5	16
	FLAT WASHER	M3x2.5x0.5	16
21-2	ROUND HEAD BOLT	M3x0.5	50
	SPRING WASHER	M3x1.0x0.5	50
	FLAT WASHER	M3x2.5x0.5	50
21-3	ROUND HEAD BOLT	M4x0.5	24
	SPRING WASHER	M4x1.0x1.0	24
	FLAT WASHER	M4x1.0x0.5	24
21-4	FLAT HEAD BOLT	M3x0.5	2
21-5	SPRING WASHER	M4x1.0x1.0	8
	FLAT WASHER	M4x1.0x0.5	8
	NUT	M4	8

ITEM	DESCRIPTION	SPEC	DWG NO.
1	FRONT PANEL	[illegible]	[illegible]
2	FRAME	[illegible]	[illegible]
3	LED BRACKET	[illegible]	[illegible]
4	COVER	[illegible]	[illegible]
5	LED SEGMENT ARRAY	[illegible]	[illegible]
6	LED CONTROL BOARD	[illegible]	[illegible]
7	POWER CONVERTER ASSEM	[illegible]	[illegible]
8	CONNECTOR	[illegible]	
9	CONNECTOR	[illegible]	
10	RUBBER GROMET	EPDM, [illegible]	
11	SPRING BRACKET	[illegible]	[illegible]
12	NAME PLATE	AL-1	[illegible]
13	PHILLIPS RIVNUT	[illegible]	
14	RIVNUT(HOLE SLIP ON)	[illegible]	
15	RIVNUT(HOLE SLIP IN)	[illegible]	
16	[illegible]	[illegible]	
17	[illegible]	[illegible]	
18	BRACKET	[illegible]	[illegible]
19	RUBBER TUBE	[illegible]	
20	EMC GASKET	[illegible]	
21	BOLT & WASHER LIST	ASSY	
22	HOSE	[illegible]	[illegible]
23	LED PROTECTIVE COVER	POLYCARBONATE,P-LATINI BLACK COLOR	[illegible]
24	STOPER	VINIL	[illegible]
25	FILTERING DIAGRAM	ASSY	[illegible]

X1: CONNECTOR PIN ASSIGMENT
[ITH08F22-14SBOF8]

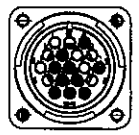

NO.	ITEM
A	POWER VCC
B	
C	POWER GND
D	
E	TX1 +(in)
F	TX1 -(in)
G	TX1 SH(in)
H	
J	
K	
L	
M	
N	
P	
R	ADD 1
S	ADD 2
T	ADD 3
U	ADD 4
V	ADD GND

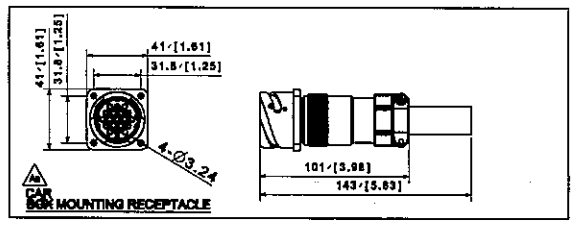

FOR MOUNTING RECEPTACLE

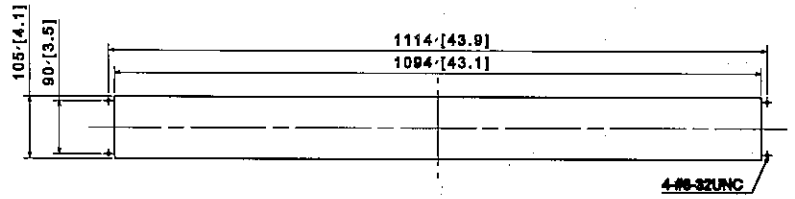

PANEL CUTOUT

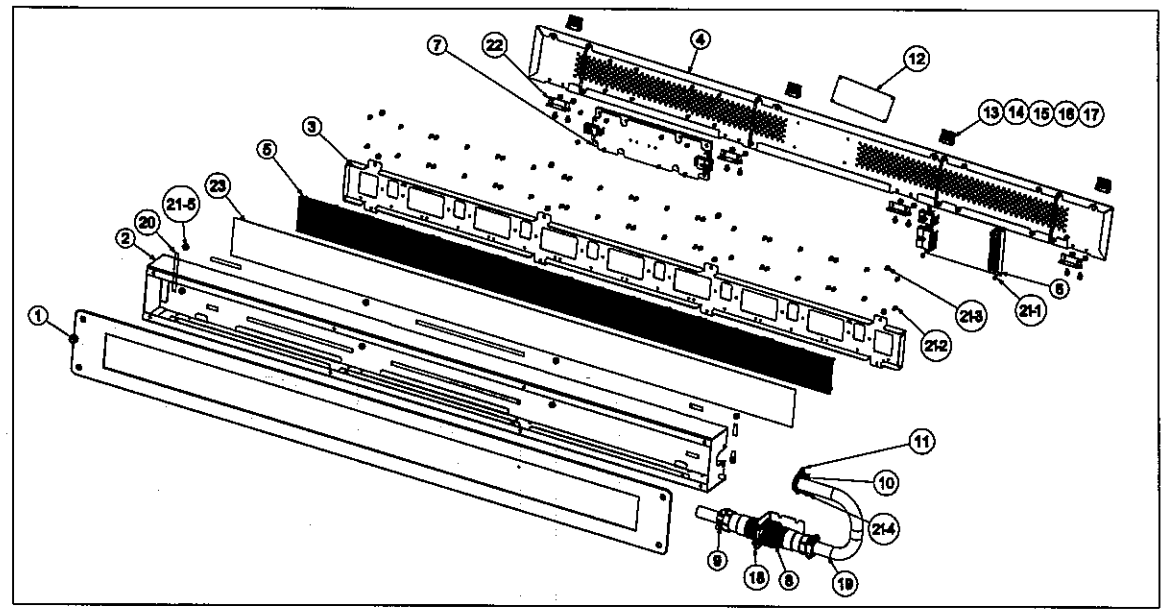

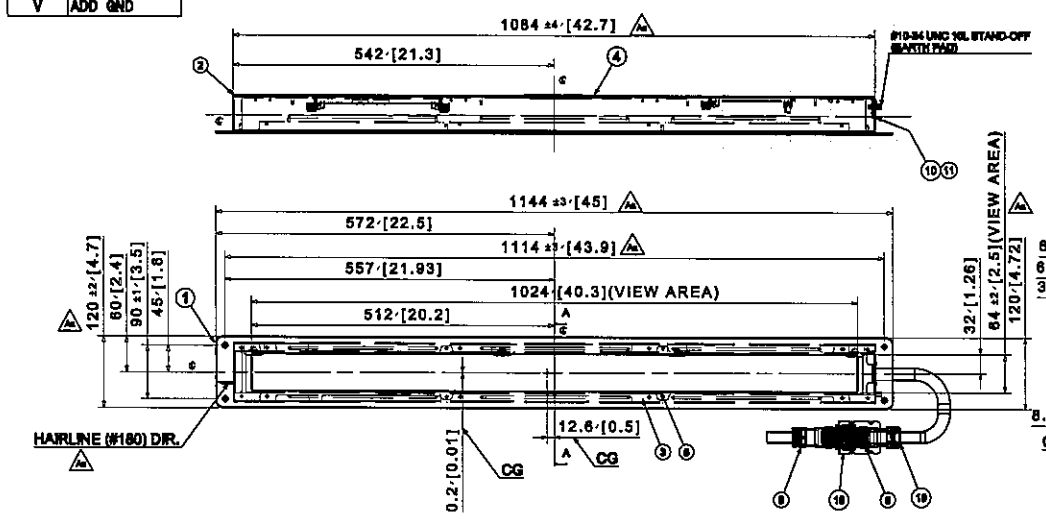

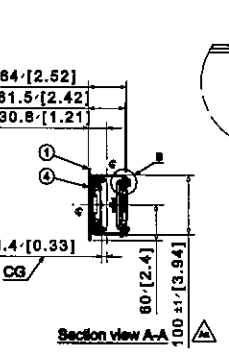

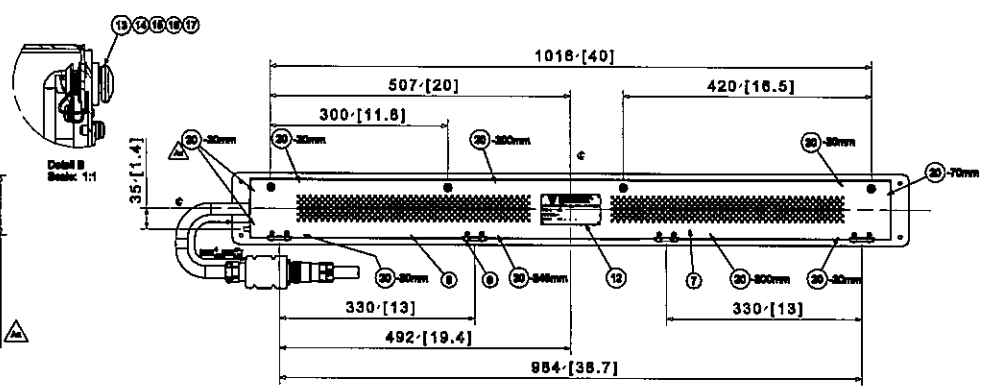

개정 MARK	일자 DATE	변경내역 DETAIL OF REVISION(E.C ZONE)	설변번호 E.C NO.	설계 DGN	검도 CHK	승인 APP
Dx1	2012.07.25	The supplier revied the type of screw.	RME1002-U144	Y.S.JEON	C.Y.LEE	S.H.PARK
Cx1	2012.03.15	The supplier revied the weight and Dia.		Y.S.JEON	C.Y.LEE	S.H.PARK
Bx1	2012.01.05	The supplier revied the painting Spec.		Y.S.JEON	C.Y.LEE	S.H.PARK
Ax1	2011.10.25	The supplier revied the drawing for FDR		Y.S.JEON	C.Y.LEE	S.H.PARK

품번 NO.	부품 번호 PART NO.	품명 DESCRIPTION	재질 MATERIAL	수량 Q'TY	중량 W'T	비고 REMARKS
승인 APP	S.H.PARK 2011.03.25	재질 MAT'L ASSY	중량 G.W 18.1 lbs			
검도 CHK	C.Y.LEE 2011.03.17					
설계 DGN	Y.S.JEON 2011.03.11					
제도 DRG						

TITLE: PASSENGER INFORMATION INDICATOR

DRG. NO: RES25001CT0 (HS) — Ver. 00, Rev. -D — RME1002

SCALE N/S — 매수 SHEET 1 of 1 — SIZE D

REF. NO.

HYUNDAI Rotem 현대로템주식회사

DENVER RTD FASTRACKS — LED PASSENGER INFORMATION INDICATOR — R1D1473-36853 — A0

DIM. IN mm — 작성일 DATE 2011.10.07 — 승인 APPROVED — 척도 SCALE 1 / 5 — 작성 DRAWN B.H.KANG — 검토 CHECKED - — 승인 APPROVED B.J.JONE — 표준 STANDARD J.Y.LEE

개정 CHANGE

GENERAL TOLERANCE

본 도면은 현대로템 주식회사의 재산으로서 무단 복제 및 배포를 금지하며 보안을 요하는 사항입니다. - PROPERTY OF HYUNDAI ROTEM COMPANY. CANNOT BE DISTRIBUTED OR REPRODUCED WITHOUT AUTHORIZATION.

CATIA

Hyundai Rotem 254096 2012-09-28 11:48
Hyundai Rotem|10.196.33.77|254096|2012-10-15 18:37:22

TECHNICAL DATA :

1. INPUT VOLTAGE : AC 230V
2. CURRENT CONSUMPTION : 1A
3. INTERFACE : CML DIGITAL VIDEO SIGNAL
4. COLOR FRONT FRAME : EX4505[S]-TX-WH001 (WHITE)
5. DISPLAY : LTM190BT03, SAMSUNG
6. NUMBER OF PIXELS : 1,440x900
7. ACTIVE AREA : 408.2mm[16"]x255.2mm[10"]
8. COLORS : 16.7M
9. BRIGHTNESS : 300cd/□
10. CONTRAST RATIO : 1,000:1
11. WEIGHT : ~~10.5kg~~ 8 Ae

12. SURFACE TREATMENT
1) ITEM : NO.1,2
- COLOR : GRAY
- COLOR CODE : PANTONE COOL GRAY 1C
- MAKER : CHOKWANG
2) ITEM : NO. 4,22
- S/TREATMENT : Zn PLATING

NOTE.

1. BOLT TYPE DESCRIPTION

(25) — ITEM NO.

2. NON-ASSIGNED CONNECTOR SOCKETS/PINS SHOULD BE FILLED WITH SEALING PLUG. (SEALING PLUG : 10-305045-16, GLENAIR)

NO.	TYPE	SIZE	Q'TY
25-1	ROUND HEAD BOLT	M3xL6	29
	SPRING WASHER	M3xØ5xt0.6	29
	FLAT WASHER	M3xØ5.8xt0.5	29
25-2	ROUND HEAD BOLT	M3xL12	12
	SPRING WASHER	M3xØ5xt0.8	12
	FLAT WASHER	M3xØ5.8xt0.5	12
25-3	FAN HEAD SCREW	M4xL6	6
	SPRING WASHER	M4xØ8.8xt1.0	6
	FLAT WASHER	M4xØ7.8xt0.8	6
25-4	FLAT WASHER	M4xL8	10
	SPRING WASHER	M4xØ8.8xt1.0	10
	FLAT WASHER	M4xØ7.8xt0.8	10

군번 GROUP NO.			품번 ITEM	품 명 DESCRIPTION	사 양 SPEC	도면번호 DWG NO.	-	물번 및 판번	중량.길이 폭x길이	표면처리 S/TREATMENT
		1	1	MAIN FRAME	A380-61, t1.2	R1C000040				PAINTING
		1	2	COVER	A380-61, t1.2	R1D000336				PAINTING
		1	3	LCD PROTECTIVE COVER	POLYCARBONATE, t2.0	R1D000341				
		1	4	LCD INVERTER BRACKET	A380-61, t1	R1C000039				Zn PLATING
		1	5	TFT LCD PANEL	LTM190BT03, SAMSUNG					
		1	6	LCD INVERTER	CH317A, SAMSUNG					
		1	7	VIDEO RX BOARD	PID-PCB, W18	R1D000338				
		1	8	POWER CONVERTER BOARD	PID-PCB, W18	R1D000337				
		1	9	WIRING HARNESS	PID1-WH, W58					
		1	10	CONNECTOR (X1)	FRT84168R186-1P8G01F8G1BNAIR					
		1	11	CONNECTOR (X1)	FRT84168F186-1B8G01F8G1BNAIR					
		1	12	CONNECTOR (X2)	UTG014128/PCI					
		1	13	CONNECTOR(X2)	UTG014128/PCI					
		2	14	STUD	D6-316-219-190 D8-888-101-888 -, SOUTHCO					
		2	15	SPRING	D4-EHPS-3-8600A D8-888-801-888 -, SOUTHCO					
		2	16	CUP WASHER	D6-378-001-049 D4-PUCS-6-888-BA -, SOUTHCO					
		2	17	RETAINER	D6-326-101-200 D8-888-400-188 -, SOUTHCO					
		2	18	RECEPTACLE	D6-334-400-121 D8-818-888-188 -, SOUTHCO					
		1	19	NAME PLATE	AL,t=1	R1D000482	-	06		
		1	20	FIXED WIRE	WIRE	R1D000461	-	02		
		2	21	TIE-MOUNT	JOTM-288, JEONG ELECTRIC					
		1	22	LCD BRACKET	A380-61, t1	R1C000037				Zn PLATING
		2	23	DUST COVER	-					
		2	24	WIRE BRACKET	A380-61, t2	R1D000461	-	01		
		1	25	BOLT & WASHER LIST	ASSY					
		2	26	CONNECTOR(X3,X4)	BCP-C77FA, CANARE					
		1	27	PID1 WIRING DIAGRAM	ASSY	R1D000442				

X1 : PIN ASSIGNMENT [FRITS4102R16S-1P8G01F6]

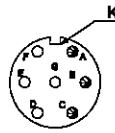

NO.	ITEM
A	TX1+(in)
B	TX1-(in)
C	TX1 SH(in)
D	
E	
F	
G	

X2 : PIN ASSIGNMENT [UTG014128]

NO.	ITEM
A	POWER VCC
B	POWER GND
C	
D	ADD2
E	ADD3
F	ADD4
G	ADD5
H	ADD6
J	ADD7
K	ADD8
L	ADD9
M	ADD GND

X3 : BNC CONNECTOR

PIN NO.	REMARK
CENTER	VIDEO OUT
SHIELD	GND

X4 : BNC CONNECTOR

PIN NO.	REMARK
CENTER	VIDEO IN
SHIELD	GND

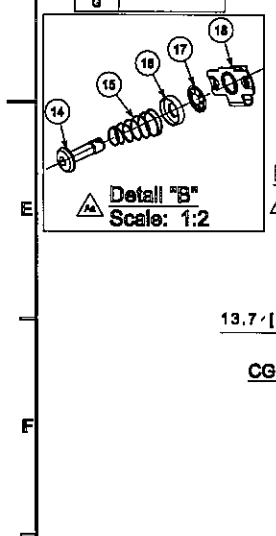

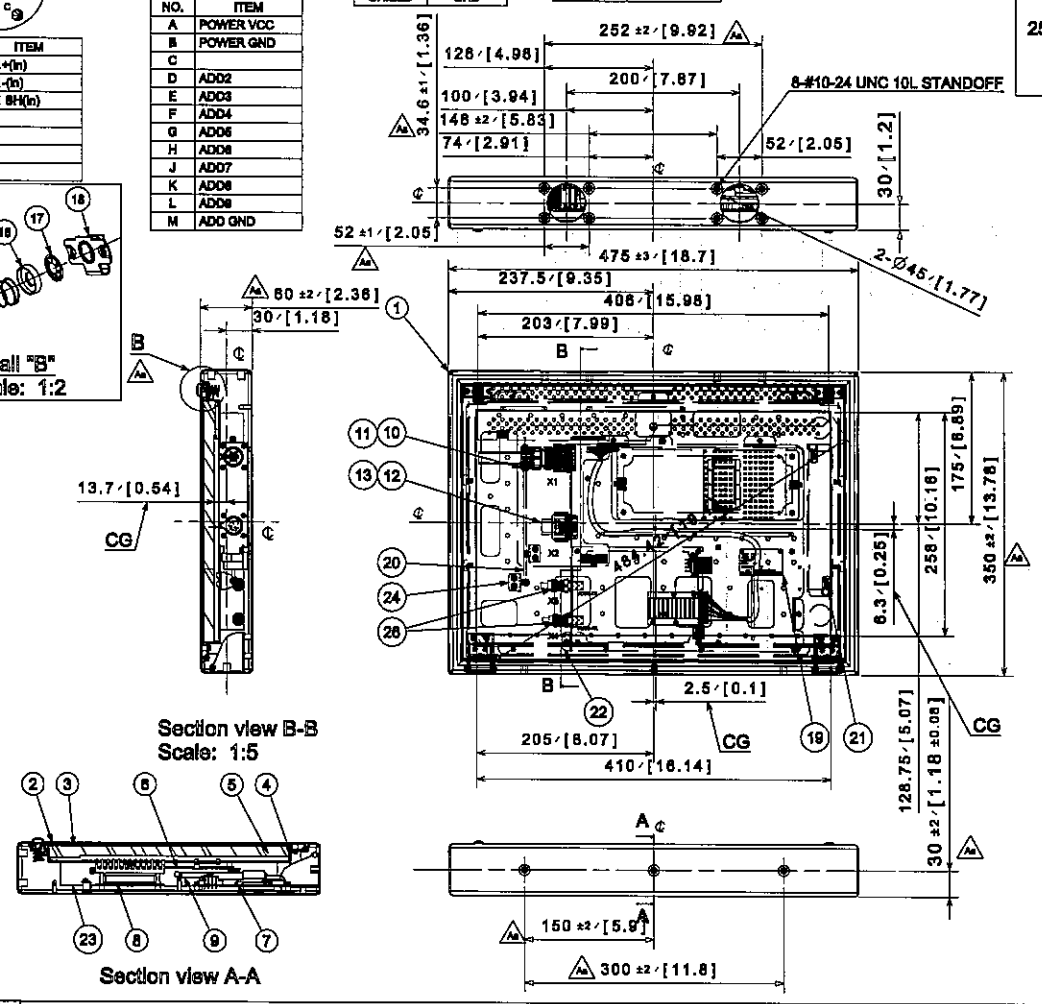

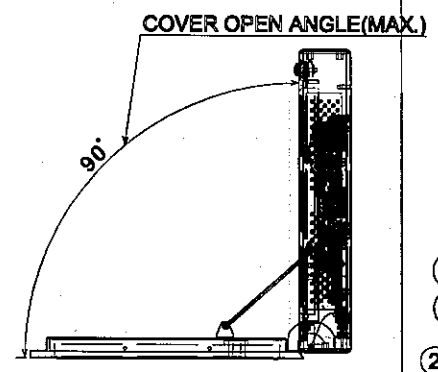

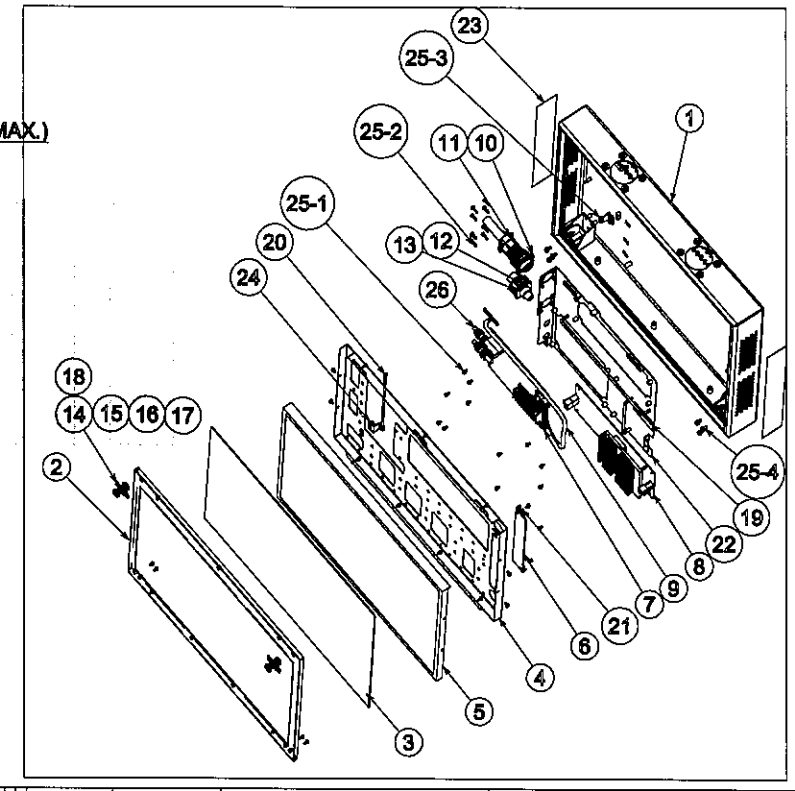

구분		A	B
주조 DIE CASTING	~ 40	2	4
	~ 30	2	3
	~ 10	1	1.5
	< 3	0.5	1
사출 INJECTION	~3150	-	7
	~1600	4	5
	~ 800	3	4
	~ 400	2	3
	~ 200	1.5	2
	~ 100	1	1.5
등급 GRADE	치수	A	B
주조, 구상흑연 CASTING (±)			
~ 20M	8	14	24
~ 15M	7	12	21
~ 12M	6	10	18
~ 8M	5	8	14
~ 4M	4	6	11
~ 2M	3	4	8
~ 1M	2	3	6
~ 315	1	2	4
~ 120	1	2	3
~ 30	1	1	1
등급 GRADE	A	B	C
용접 구조물 WELDING (±)			
~ 20M	-	6.0	8.0
~ 15M	-	5.0	7.0
~ 12M	-	4.0	6.0
~ 8M	-	3.0	5.0
~ 4M	0.8	2.0	4.0
~ 2M	0.5	1.2	3.0
~ 1M	0.3	0.8	2.0
~ 315	0.2	0.5	1.2
~ 120	0.15	0.3	0.8
~ 30	0.1	0.2	0.5
3~6	0.05	0.1	0.2
등급 GRADE	A	B	C
기계 가공품 MACHINING (±)			

규격치않은 일반공차표 GENERAL TOLERANCE

개정 CHANGE

A	1)Weight of product. 2)Material of product. 3)Finish & Thickness added. 4)Finish "B" added.	B.J.JONE	
2012.05.12		APP	Y.S.JEON

| | | | | |

NOTE

1. NON-ASSINGNED CONNECTOR SOCKETS/PINS SHOULD BE FILLED WITH SEALING PLUG.
(SEALING PLUG : 10-305045-16, GLENAIR)

TECHNICAL DATA :

1. INPUT VOLTAGE : AC 230V
2. CURRENT CONSUMPTION : 1A
3. INTERFACE : CML DIGITAL VIDEO SIGNAL
4. COLOR FRONT FRAME : EX4505[S]-TX-WH001(WHITE)
5. DISPLAY : SAMSUNG - LTM190M2(19")
6. NUMBER OF PIXELS : 1,440x900
7. ACTIVE AREA : 408.2mm[16"]x255.2mm[10"]
8. COLORS : 16.7M
9. BRIGHTNESS : 300cd/□
10. CONTRAST RATIO : 1,000 ::1
11. WEIGHT : 7.6kg
12. BOLT TYPE DESCRIPTION
(18)
└ ITEM NO.

NO.	TYPE	SIZE	QTY
18-1	ROUND HEAD BOLT	M3xL6	23
	SPRING WASHER	M3x(5.8)x0.8	23
	FLAT WASHER	M3x(5.8)x0.5	23
18-2	ROUND HEAD BOLT	M3xL12	4
	SPRING WASHER	M3x(5.8)x0.8	4
	FLAT WASHER	M3x(5.8)x0.5	4
18-3	FLAT HEAD SCREW	M3XL10 8	8

13. EMC TAPE LENGTH DESCRIPTION
(17) -341mm
└ LENGTH
└ ITEM NO.

14. SURFACE TREATMENT
1) ITEM : NO.1
- COLOR : GRAY
- COLOR CODE : PANTONE COOL GRAY 1C
- MAKER : CHOKWANG
2) ITEM : NO. 8,20
- COLOR : BLACK
- COLOR CODE : UT-721N TOP N-1.5,G20
- MAKER : PPG
3) ITEM : NO.4
- S/TREATMENT : Zn PLATING

X1: CONNECTOR PIN ASSIGMENT
[ITH03FPA22-14PB0G1F6]

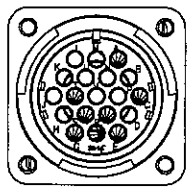

NO.	ITEM
A	POWER VCC
B	
C	POWER GND
D	
E	TX1+(In)
F	TX1-(In)
G	TX1 SH(In)
H	
J	
K	
L	
M	
N	
P	
R	ADD1
S	ADD10
T	ADD GND
U	
V	

X2 : BNC CONNECTOR

PIN NO.	REMARK
CENTER	VIDEO IN
SHIELD	GND

X3 : BNC CONNECTOR

PIN NO.	REMARK
CENTER	VIDEO OUT
SHIELD	GND

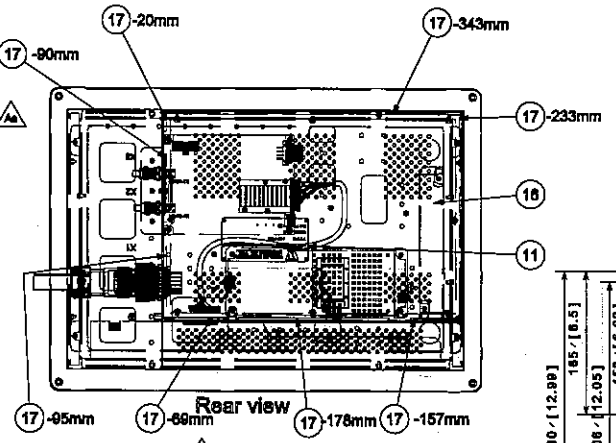

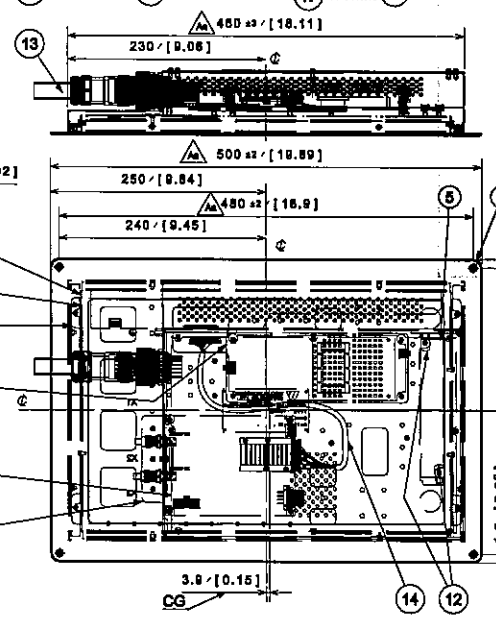

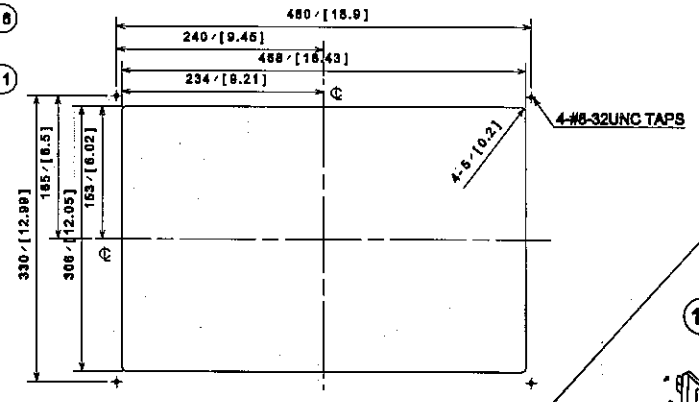

PANEL CUTOUT
SCALE 1:5

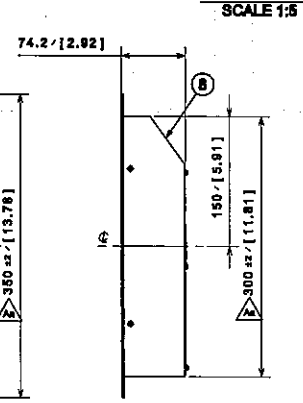

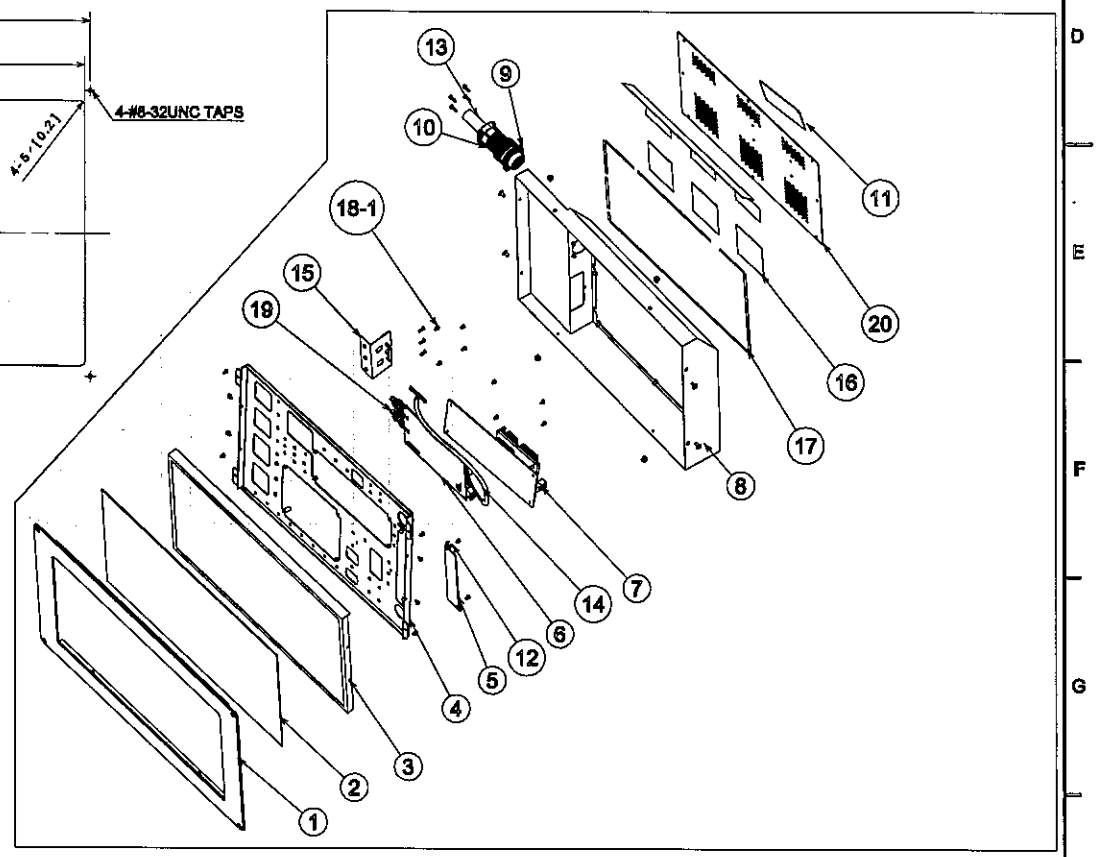

단위 GROUP NO.				품번 ITEM	품명 DESCRIPTION	사양 SPEC	도면번호 DWG NO.	-	품번 및 단번	생략, 필이 폭x필이	표면처리 S/TREATMENT
			1	1	FRAME	A5052, t3.0	R1C000044				PAINTING
			1	2	PC COVER	POLYCARBONATE, t2.0	R1D000XXX				
			1	3	TFT LCD PANEL	LTM190M1T03, SAMSUNG					
			1	4	LCD BRACKET	A365-61,t=1.0	R1C000041				Zn PLATING
			1	5	LCD INVERTER	CH053A, SAMSUNG					
			1	6	VIDEO RX BOARD	PID-RX8, WIS	R1D000336				
			1	7	POWER CONVERTER BOARD	PID-PC8, WIS	R1D000337				
			1	8	COVER	A361-CQ,t1.2	R1C000043				PAINTING
			1	9	CONNECTOR(X1)	ITH03FPA22-14PB0G1F6/GLENAIR					
			1	10	CONNECTOR(X1)	ITH03F23-14SB0F6/ GLENAIR					
			1	11	NAME PLATE	AL,t=1	R1D000482	-	07		
			5/4	12	TIE MOUNT	JOTM-258, JEONG ELECTIRC					
			7	13	WIRE MESH	DUST FILTER #25, MYUNG-JIN ELECTRONICS					
			1	14	WIRING HARNESS	PID3-WH, WIS					
			1	15	BNC CONNECTOR BRACKET	A365-61, t1.0					
			7	16	DUST COVER	-					
			8	17	EMC TAPE	SF050010R-C-NA-A, E-SONG					
			1	18	BOLT & WASHER LIST	ASSY					
			2	19	CONNECTOR	BCP-C7FA, CANARE					
			1	20	REAR COVER	A361-CQ,t1.2	R1D000344				PAINTING
			1	21	PID2 WIRING DIAGRAM	ASSY	R1D000441				

구분		A	B
주물	~ 40	2	4
	~ 30	2	3
	~ 10	1	1.5
	< 3	0.5	1
길이 LENGTH	~3150	-	7
	~1600	4	5
	~800	3	4
	~400	2	3
	~200	1.5	2
	~100	1	1.5

등급 GRADE	A	B
주물 구조용 CASTING		(±)
~ 20M	8	14
~ 15M	7	12
~ 12M	6	10
~ 8M	5	8
~ 4M	4	6
~ 2M	3	4
~ 1M	2	3
~ 315	1	2
~ 120	1	2
~ 30	1	1

등급 GRADE	A	B	C
용접 구조용 WELDING		(±)	
~ 20M	-	6.0	8.0
~ 15M	-	5.0	7.0
~ 12M	-	4.0	6.0
~ 8M	-	3.0	5.0
~ 4M	0.8	2.0	4.0
~ 2M	0.5	1.2	3.0
~ 1M	0.3	0.8	2.0
~ 315	0.2	0.5	1.2
~ 120	0.15	0.3	0.8
~ 30	0.1	0.2	0.5
3 ~ 6	0.05	0.1	0.2

등급 GRADE	A	B	C
기계 가공용 MACHINING		(±)	
규정치않은 일반공차표 GENERAL TOLERANCE			

MARK	DATE	DETAIL OF REVISION(E.C ZONE)	E.C NO.	DGN	CHK	APP
Cx1	2012.03.15	The supplier revised the weight and Dim.	RNE1002-U090	Y.S. JEON	C.Y. LEE	S.H.PARK
Bx1	2012.01.05	The supplier revised the painting spec.		Y.S. JEON	C.Y. LEE	S.H.PARK
Ax1	2011.10.25	The supplier revised the drawing for FDR		Y.S. JEON	C.Y. LEE	S.H.PARK

개정 CHANGE

품번 NO.	부품 번호 PART NO.	품명 DESCRIPTION	재질 MATERIAL	수량 Q'TY	중량 W.T	비고 REMARKS

승인 APP	S.H.PARK 2011.03.25	재질 MAT'L	ASSY
검도 CHK	C.Y.LEE 2011.03.17	총중량 G.W	18.1 lbs
설계 DGN	Y.S.JEON 2011.03.11	일반공차 MC / WD / CT	B
제도 DRG		SIZE	C

명칭 TITLE: LCD PASSENGER INFORMATION DISPLAY-2

도면 번호 DRG. NO: RES25003CT0 MS — Ver. 00 — Rev. -C — RNE1002

SCALE N/S 매수 SHEET 1 of 1

참조번호 REF. NO.

HYUNDAI Rotem 현대로템주식회사

년-PRJT

정리번호

CATIA

DENVER RTD FASTRACKS

LCD PASSENGER INF. DISPLAY ASSY WALL MOUNT

R1D1473-25852 Aa

설계MEMO	DIM. IN mm	국제표 DATE	2011.10.07
	척도 SCALE	작성 DRAWN	B.H.KANG
	1 / 5	설계 DESIGNED	-
	표준 적용기준 : WMS C 40201	검토 CHECKED	J.Y.LEE

승인 APPROVED: B.J.JONE

WOOJIN Industrial System Co.,Ltd.

Hyundai Rotem 254096 2012-05-14 12:36
Hyundai Rotem|10.198.35.77|254096|2012-05-15 18:51:52
본 도면은 당사 재산으로서 외이의 무단복사/배포 금지됨. PROPERTY OF ISSUING ENTITY. CANNOT BE DISTRIBUTED OR REPRODUCED WITHOUT AUTHORIZATION.