TECHNICAL DATA :

1. SPEAKER
   1) IMPEDANCE : 8ohm ±15%
   2) POWER RATING : 25W
   3) MATCHING : 70V (ADDITIONAL TAPS 4, 2, 1, 1/2W, 1/4W)
   4) SOUND PRESSURE LEVEL : 93dB ± 2dB
   5) RESONANCE FREQUENCY : 200±50Hz
   6) FREQUENCY RANGE : 200~13,000Hz
2. WEIGHT : 2.5kg
3. SURFACE TREATMENT
   1) ITEM : NO. 2
      - COLOR : BLACK
      - COLOR CODE : UT-721N TOP N-1.5,G20
      - MAKER : PPG
   2) ITEM : NO. 1
      - HAIRLINE #180
   3) ITEM : NO. 3
      - S/TREATMENT : Zn PLATING

EXTERNAL CN ASSIGNMENT

1. AUDIO IN1 +
2. AUDIO IN1 -
3. AUDIO IN1 SHIELD
4. AUDIO IN2 +
5. AUDIO IN2 -
6. AUDIO IN2 SHIELD
7. MUTE +
8. MUTE -

CN 4

1. SPEAKER+
2. SPEAKER-
3. NC.

NOTE

1. BOLT TYPE DESCRIPTION
   (12) — ITEM NO.
2. EMC TAPE LENGTH DESCRIPTION
   (11)-255mm — LENGTH; ITEM NO.

| NO. | TYPE | SIZE | QTY |
|---|---|---|---|
| 12-1 | ROUND HEAD BOLT | M3xL8 | 4 |
| | SPRING WASHER | M3x0.8x2.9 | 4 |
| | FLAT WASHER | M3x0.5x2.5 | 4 |
| 12-2 | ROUND HEAD BOLT | M4xL14 | 2 |
| | SPRING WASHER | M4x0.8x1.9 | 2 |
| | FLAT WASHER | M4x0.5x2.5 | 2 |
| 12-3 | ROUND HEAD BOLT | M3xL14 | 2 |
| | SPRING WASHER | M3x0.8x2.9 | 2 |
| | FLAT WASHER | M3x0.5x2.5 | 2 |
| 12-4 | FAN HEAD SCREW | M4xL8 | 4 |
| | SPRING WASHER | M4x0.8x1.9 | 4 |
| | FLAT WASHER | M4x0.5x2.5 | 4 |
| 12-5 | FLAT HEAD SCREW | M3xL8 | 4 |

| 품번 ITEM | 품명 DESCRIPTION | 사양 SPEC | 도면번호 DWG NO. | 재질 MATERIAL | 수량 Q'TY | 중량, 길이 폭x 높이 | 표면처리 S/TREATMENT |
|---|---|---|---|---|---|---|---|
| 1 | FRONT PANEL | SUS304, t3.0 | R1D000395 | | | | HAIRLINE#180 |
| 2 | REAR COVER | A5491-CQ, t1.0 | R1C000057 | | | | PAINTING |
| 3 | BRACKET | A365-81, t1.2 | R1D000394 | | | | Zn PLATING |
| 4 | SPEAKER | DAESHIN ENG. SF-4025C, PMB SUSOTECH | R1D000405 | | | | |
| 5 | CONTROL BOARD | SP-ISP, WIS | R1D000398 | | | | |
| 6 | CONNECTOR | 231-608/019-000, WAGO | | | | | |
| 7 | CONNECTOR | 231-109/037-000, WAGO | | | | | |
| 8 | NAME PLATE | AL,t=1 | R1D000452 | | - | 12 | |
| 9 | RUBBER GROMMET | EPDM, φ15mm(0.59inch) | R1D000397 | | | | |
| 10 | HARNESS | 180G0111-0.5-0,RAYCHEM | | | | | |
| 11 | EMC TAPE | SF050010R-C-NA-A, E-SONG | | | | | |
| 12 | BOLT & WAHSER LIST | ASSY | | | | | |
| 13 | GASKET | RUBBER | R1D000399 | | | | |
| 14 | WIRE MESH | 304SS,SCREEN #50, φ0.3 | R1D000449 | | - | 01 | |
| 15 | SHEET | 304SS,t0.7 | R1D000449 | | - | 02 | |
| 16 | ISP WIRING DIAGRAM | ASSY | R1D000457 | | | | |
| 17 | RUBBER TUBE | φ9,PH220065BN4/GLENAIR | | | | | |

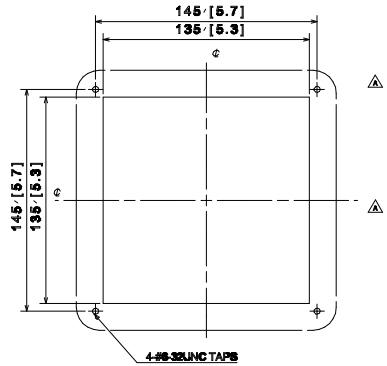


PANEL CUTOUT

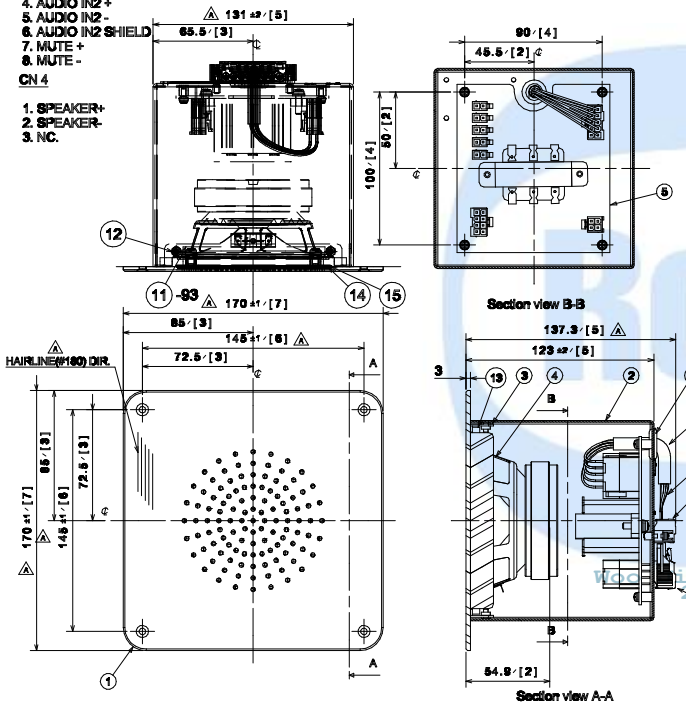


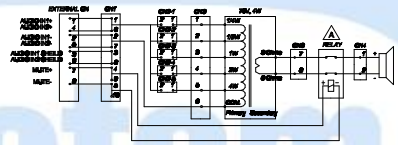

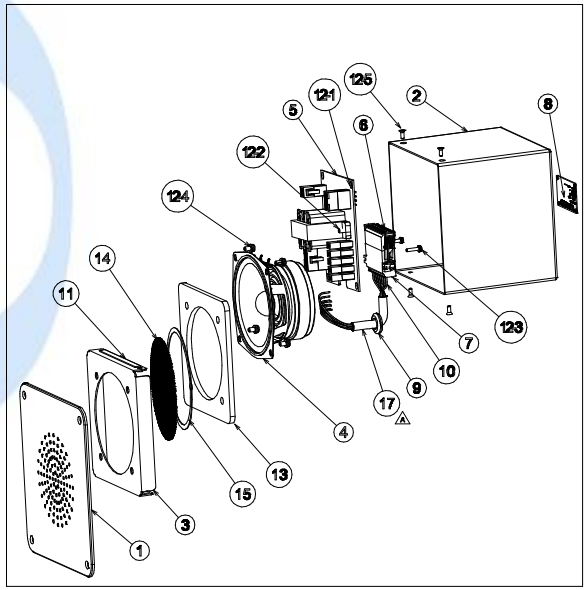

| 개정 CHANGE | | |
|---|---|---|
| 1 | 2012.03.15 | The supplier revised the weight and Dim. |
| 0 | 2011.10.25 | The supplier revised the drawing for FDR |

| | | | |
|---|---|---|---|
| 설계MEMO | DIM. IN mm | 작성일 DATE | 2011.09.30 |
| | 척도 SCALE | 작성 DRAWN | B.H.KANG |
| | 1 / 2 | 설계 DESIGNED | - |
| | | 검토 CHECKED | J.Y.LEE |
| 공차 적용기준 : WMS C 40201 | | 승인 APPROVED | B.J.JONIE |

WOOJIN Robot Motion Class

DENVER RTD FASTRACKS

INTERIOR SPEAKER

R1D1473-25857 A

| 품번 NO. | 부품 번호 PART NO. | 품 명 DESCRIPTION | 재 질 MATERIAL | 수량 Q'TY | 중량 W.T | 비 고 REMARKS |
|---|---|---|---|---|---|---|

| | | | |
|---|---|---|---|
| 승인 APP | S.H.PARK 2011.03.25 | 재질 MAT'L | ASSY |
| 검도 CHK | C.Y.LEE 2011.03.17 | 총중량 G.W | 5.4 lbs |
| 설계 DGN | Y.S.JEON 2011.03.11 | 일반공차 MC / WD / CT | B |
| 제도 DRG | | | SIZE C |

명 칭 TITLE: INTERIOR SPEAKER

도면 번호 DRG. NO: RES11002CT0 (MS) Ver. 00 Rev. -C RNE1002

SCALE N/S 매수 SHEET 1 of 1

참고번호 REF. NO.

HYUNDAI Rotem 현대로템주식회사

| 기호 MARK | 일자 DATE | 변경내역 DETAIL OF REVISION(E.C ZONE) | 설변번호 E.C NO. | 설계 DGN | 검도 CHK | 승인 APP |
|---|---|---|---|---|---|---|
| Cx1 | 2012.03.15 | The supplier revised the weight and Dim. | RNE1002-U090 | Y.S.JEON | C.Y.LEE | S.H.PARK |
| Bx1 | 2012.01.05 | The supplier revised painting spec. | | Y.S.JEON | C.Y.LEE | S.H.PARK |
| Ax1 | 2011.10.25 | The supplier revised the drawing for FDR | | Y.S.JEON | C.Y.LEE | S.H.PARK |

| 구분 | | A | B | C |
|---|---|---|---|---|
| 두께 THICKNESS | ~ 40 | 2 | 4 | |
| | ~ 30 | 2 | 3 | |
| | ~ 10 | 1 | 1.5 | |
| | < 3 | 0.5 | 1 | |
| 길이 LENGTH | ~3150 | - | 7 | |
| | ~1600 | 4 | 5 | |
| | ~ 800 | 3 | 4 | |
| | ~ 400 | 2 | 3 | |
| | ~ 200 | 1.5 | 2 | |
| | ~ 100 | 1 | 1.5 | |
| 등급 GRADE | | A | B | |
| 주조, 주강품 CASTING (±) | | | | |
| ~ 20M | 8 | 14 | 24 | |
| ~ 15M | 7 | 12 | 21 | |
| ~ 12M | 6 | 10 | 18 | |
| ~ 8M | 5 | 8 | 14 | |
| ~ 4M | 4 | 6 | 11 | |
| ~ 2M | 3 | 4 | 8 | |
| ~ 1M | 2 | 3 | 6 | |
| ~ 315 | 1 | 2 | 4 | |
| ~ 120 | 1 | 2 | 3 | |
| ~ 30 | 1 | 1 | 1 | |
| 등급 GRADE | A | B | C | |
| 용접 구조물 WELDING (±) | | | | |
| ~ 20M | - | 6.0 | 8.0 | |
| ~ 15M | - | 5.0 | 7.0 | |
| ~ 12M | - | 4.0 | 6.0 | |
| ~ 8M | - | 3.0 | 5.0 | |
| ~ 4M | 0.8 | 2.0 | 4.0 | |
| ~ 2M | 0.5 | 1.2 | 3.0 | |
| ~ 1M | 0.3 | 0.8 | 2.0 | |
| ~ 315 | 0.2 | 0.5 | 1.2 | |
| ~ 120 | 0.15 | 0.3 | 0.8 | |
| ~ 30 | 0.1 | 0.2 | 0.5 | |
| 3~6 | 0.05 | 0.1 | 0.2 | |
| 등급 GRADE | A | B | C | |
| 기계 가공품 MACHINING (±) | | | | |
| 규정없음은 일반공차를 GENERAL TOLERANCE | | | | |

Rotem 270430 2012-10-16 10:19

Woojin Corp. Lee Kyoung 2012-10-17 00:24 EXP: 2013-04-16

본 도면은 당사 재산으로서 허가없이 무단복사/배포 금지됨. PROPERTY OF ISSUING ENTITY. CANNOT BE DISTRIBUTED OR REPRODUCED WITHOUT AUTHORIZATION.

CATIA