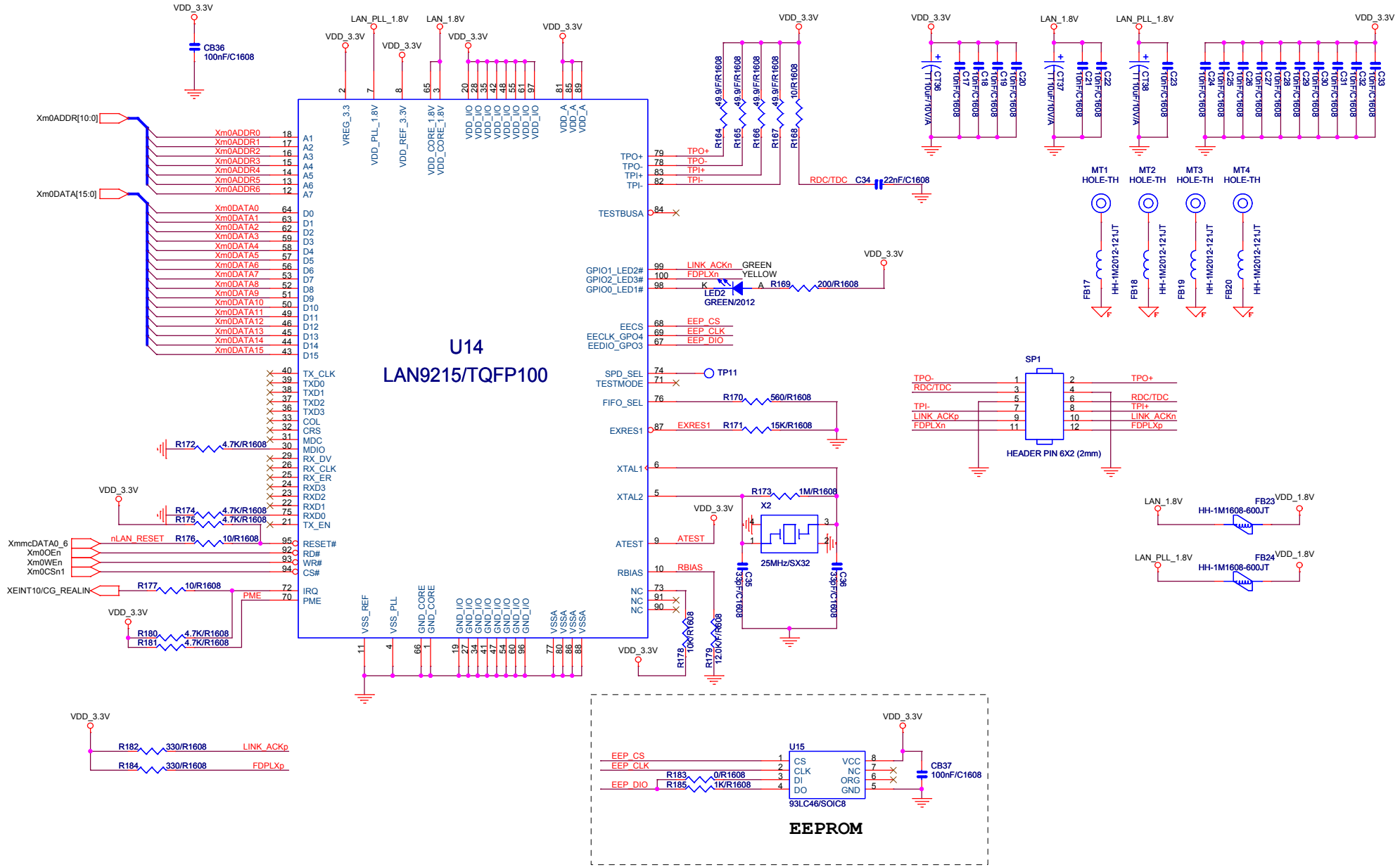
U14
LAN9215/TQFP100
VDD_3.3V
CB36
100nF/C1608
LAN_PLL_1.8V
LAN_1.8V
Xm0ADDR[10:0]
Xm0DATA[15:0]
Xm0ADDR0
Xm0ADDR1
Xm0ADDR2
Xm0ADDR3
Xm0ADDR4
Xm0ADDR5
Xm0ADDR6
Xm0DATA0
Xm0DATA1
Xm0DATA2
Xm0DATA3
Xm0DATA4
Xm0DATA5
Xm0DATA6
Xm0DATA7
Xm0DATA8
Xm0DATA9
Xm0DATA10
Xm0DATA11
Xm0DATA12
Xm0DATA13
Xm0DATA14
Xm0DATA15
TX_CLK
TXD0
TXD1
TXD2
TXD3
COL
CRS
MDC
MDIO
RX_DV
RX_CLK
RX_ER
RXD3
RXD2
RXD1
RXD0
TX_EN
RESET#
RD#
WR#
CS#
IRQ
PME
R172 4.7K/R1608
R174 4.7K/R1608
R175 4.7K/R1608
nLAN_RESET
R176 10/R1608
XmmcDATA0_6
Xm0OEn
Xm0WEn
Xm0CSn1
XEINT10/CG_REALIN
R177 10/R1608
R180 4.7K/R1608
R181 4.7K/R1608
R182 330/R1608
LINK_ACKp
R184 330/R1608
FDPLXp
TPO+
TPO-
TPI+
TPI-
TESTBUSA
GPIO1_LED2#
GPIO2_LED3#
GPIO0_LED1#
LINK_ACKn
FDPLXn
GREEN
YELLOW
LED2
GREEN/2012
R169 200/R1608
EECS
EECLK_GPO4
EEDIO_GPO3
EEP_CS
EEP_CLK
EEP_DIO
SPD_SEL
TESTMODE
TP11
FIFO_SEL
R170 560/R1608
EXRES1
R171 15K/R1608
XTAL1
XTAL2
R173 1M/R1608
X2
25MHz/SX32
C35 33pF/C1608
C36 33pF/C1608
ATEST
RBIAS
NC
R178 10K/R1608
R179 12.0K/R1608
R164 49.9/F/R1608
R165 49.9/F/R1608
R166 49.9/F/R1608
R167 49.9/F/R1608
R168 10/R1608
RDC/TDC
C34 22nF/C1608
CT36 T110uF/10V/A
CT37 T110uF/10V/A
CT38 T110uF/10V/A
C17 10nF/C1608
C18 10nF/C1608
C19 10nF/C1608
C20 10nF/C1608
C21 10nF/C1608
C22 10nF/C1608
C23 10nF/C1608
C24 10nF/C1608
C25 10nF/C1608
C26 10nF/C1608
C27 10nF/C1608
C28 10nF/C1608
C29 10nF/C1608
C30 10nF/C1608
C31 10nF/C1608
C32 10nF/C1608
C33 10nF/C1608
MT1 HOLE-TH
MT2 HOLE-TH
MT3 HOLE-TH
MT4 HOLE-TH
FB17 HH-1M2012-121JT
FB18 HH-1M2012-121JT
FB19 HH-1M2012-121JT
FB20 HH-1M2012-121JT
SP1
HEADER PIN 6X2 (2mm)
FB23 HH-1M1608-600JT
FB24 HH-1M1608-600JT
VDD_1.8V
U15
CS
CLK
DI
DO
VCC
NC
ORG
GND
93LC46/SOIC8
R183 0/R1608
R185 1K/R1608
CB37
100nF/C1608
EEPROM

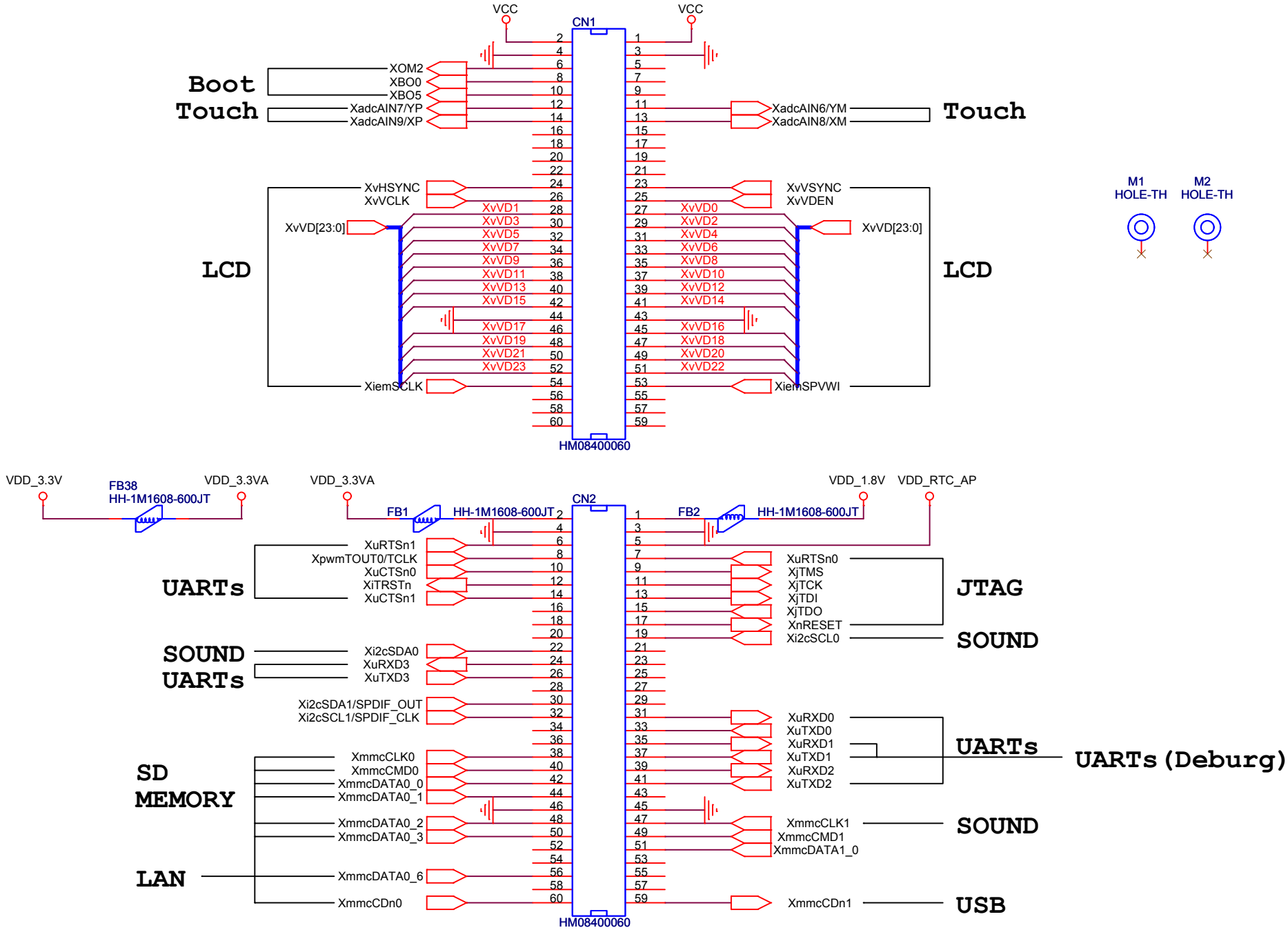

Title	WOOJIN-DENBER	
Size A4	Document Number CPU BASE / CONNECTOR -1	Rev <RevCo
Date: Monday, January 30, 2012	Sheet 1 of 13	

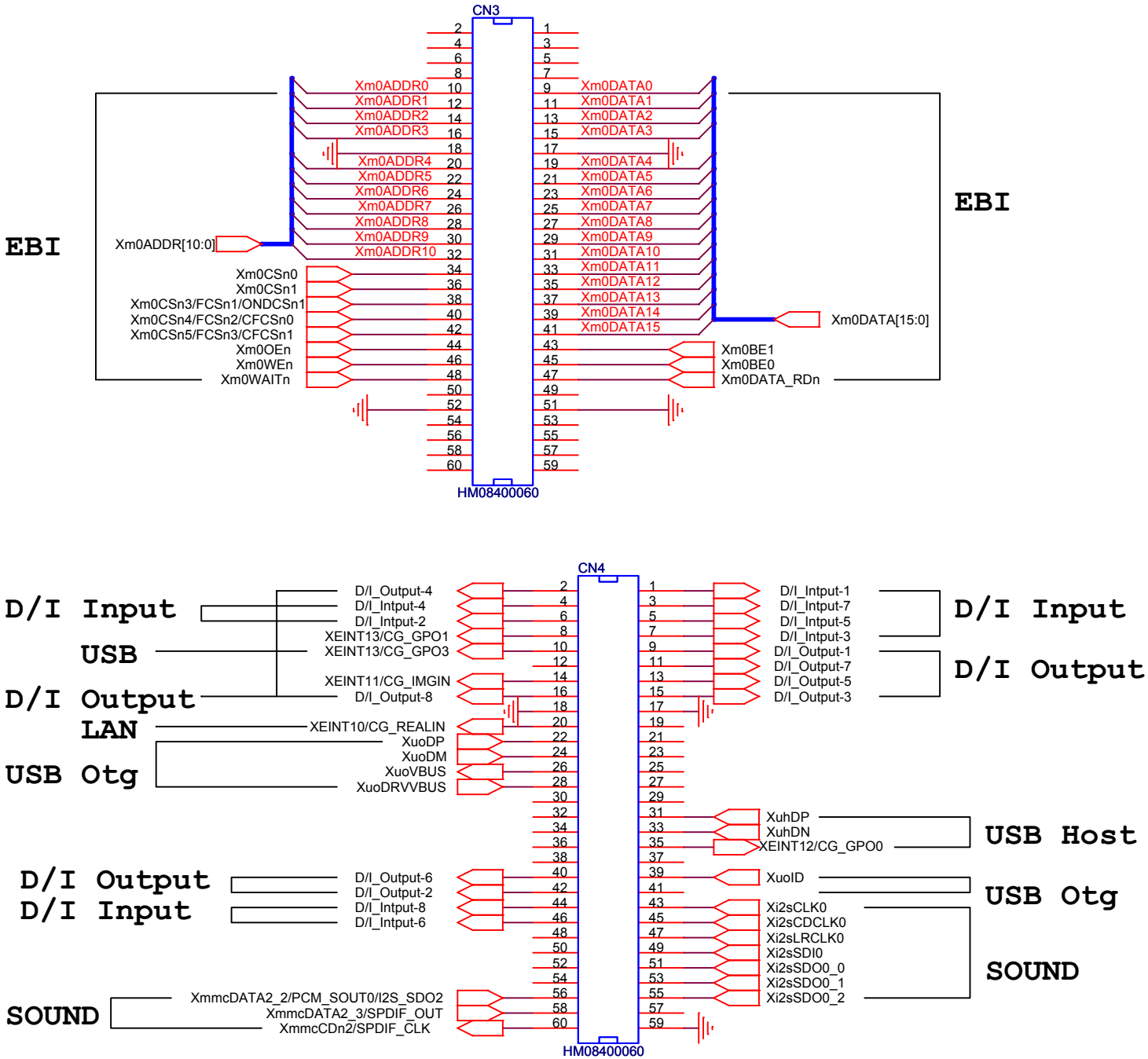

Title	WOOJIN-DENBER	
Size A4	Document Number CPU BASE / CONNECTOR -2	Rev <RevCo
Date: Monday, January 30, 2012	Sheet 2 of 13	

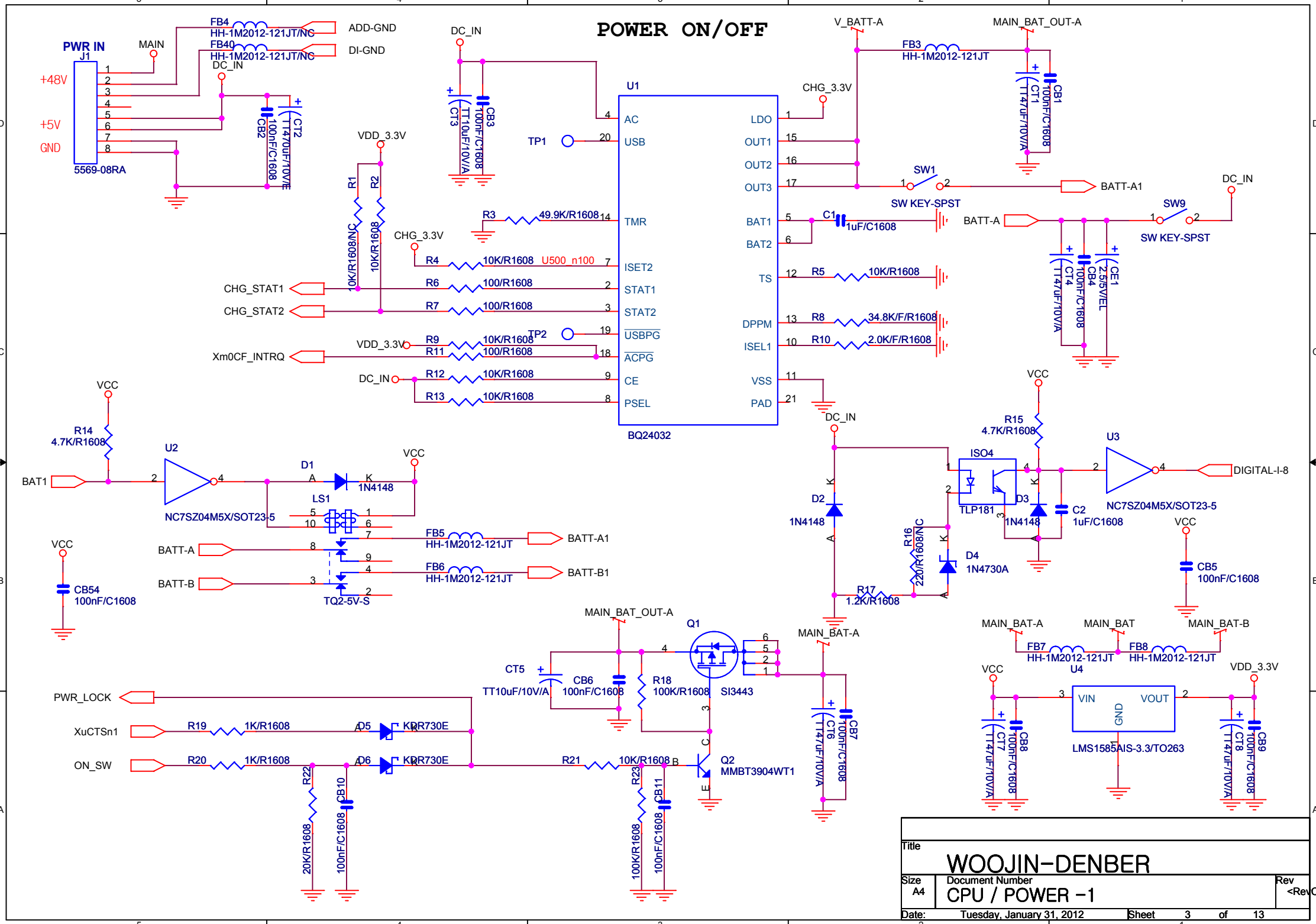
POWER ON/OFF
PWR IN
J1
5569-08RA
+48V
+5V
GND
MAIN
FB4
HH-1M2012-121JT/NC
FB40
HH-1M2012-121JT/NC
ADD-GND
DI-GND
DC_IN
CB2
100nF/C1608
CT2
TT470uF/10V/E
CT3
TT10uF/10V/A
CB3
100nF/C1608
U1
BQ24032
AC
USB
TMR
ISET2
STAT1
STAT2
USBPG
ACPG
CE
PSEL
LDO
OUT1
OUT2
OUT3
BAT1
BAT2
TS
DPPM
ISEL1
VSS
PAD
TP1
TP2
VDD_3.3V
R1
R2
10K/R1608/NC
10K/R1608
R3
49.9K/R1608
CHG_3.3V
R4
10K/R1608
U500_n100
R6
100/R1608
R7
100/R1608
CHG_STAT1
CHG_STAT2
R9
10K/R1608
R11
100/R1608
Xm0CF_INTRQ
R12
10K/R1608
R13
10K/R1608
V_BATT-A
FB3
HH-1M2012-121JT
MAIN_BAT_OUT-A
CT1
TT47uF/10V/A
CB1
100nF/C1608
SW1
SW KEY-SPST
BATT-A1
C1
1uF/C1608
R5
10K/R1608
R8
34.8K/F/R1608
R10
2.0K/F/R1608
BATT-A
SW9
SW KEY-SPST
CT4
TT47uF/10V/A
CB4
100nF/C1608
CE1
2.5/5V/EL
VCC
R14
4.7K/R1608
U2
NC7SZ04M5X/SOT23-5
D1
1N4148
LS1
FB5
HH-1M2012-121JT
BATT-A1
FB6
HH-1M2012-121JT
BATT-B1
TQ2-5V-S
CB54
100nF/C1608
R15
4.7K/R1608
ISO4
TLP181
D2
1N4148
D3
1N4148
C2
1uF/C1608
U3
NC7SZ04M5X/SOT23-5
DIGITAL-I-8
R16
220/R1608/NC
D4
1N4730A
R17
1.2K/R1608
CB5
100nF/C1608
MAIN_BAT_OUT-A
Q1
SI3443
CT5
TT10uF/10V/A
CB6
100nF/C1608
R18
100K/R1608
MAIN_BAT-A
CT6
TT47uF/10V/A
CB7
100nF/C1608
MAIN_BAT-A
MAIN_BAT
MAIN_BAT-B
FB7
HH-1M2012-121JT
FB8
HH-1M2012-121JT
U4
VIN
VOUT
GND
LMS1585AIS-3.3/TO263
CT7
TT47uF/10V/A
CB8
100nF/C1608
CT8
TT47uF/10V/A
CB9
100nF/C1608
PWR_LOCK
XuCTSn1
ON_SW
R19
1K/R1608
R20
1K/R1608
D5
KDR730E
D6
KDR730E
R22
20K/R1608
CB10
100nF/C1608
R21
10K/R1608
R23
100K/R1608
CB11
100nF/C1608
Q2
MMBT3904WT1
Title
WOOJIN-DENBER
Size
A4
Document Number
CPU / POWER -1
Rev
<RevCo
Date:
Tuesday, January 31, 2012
Sheet
3
of
13

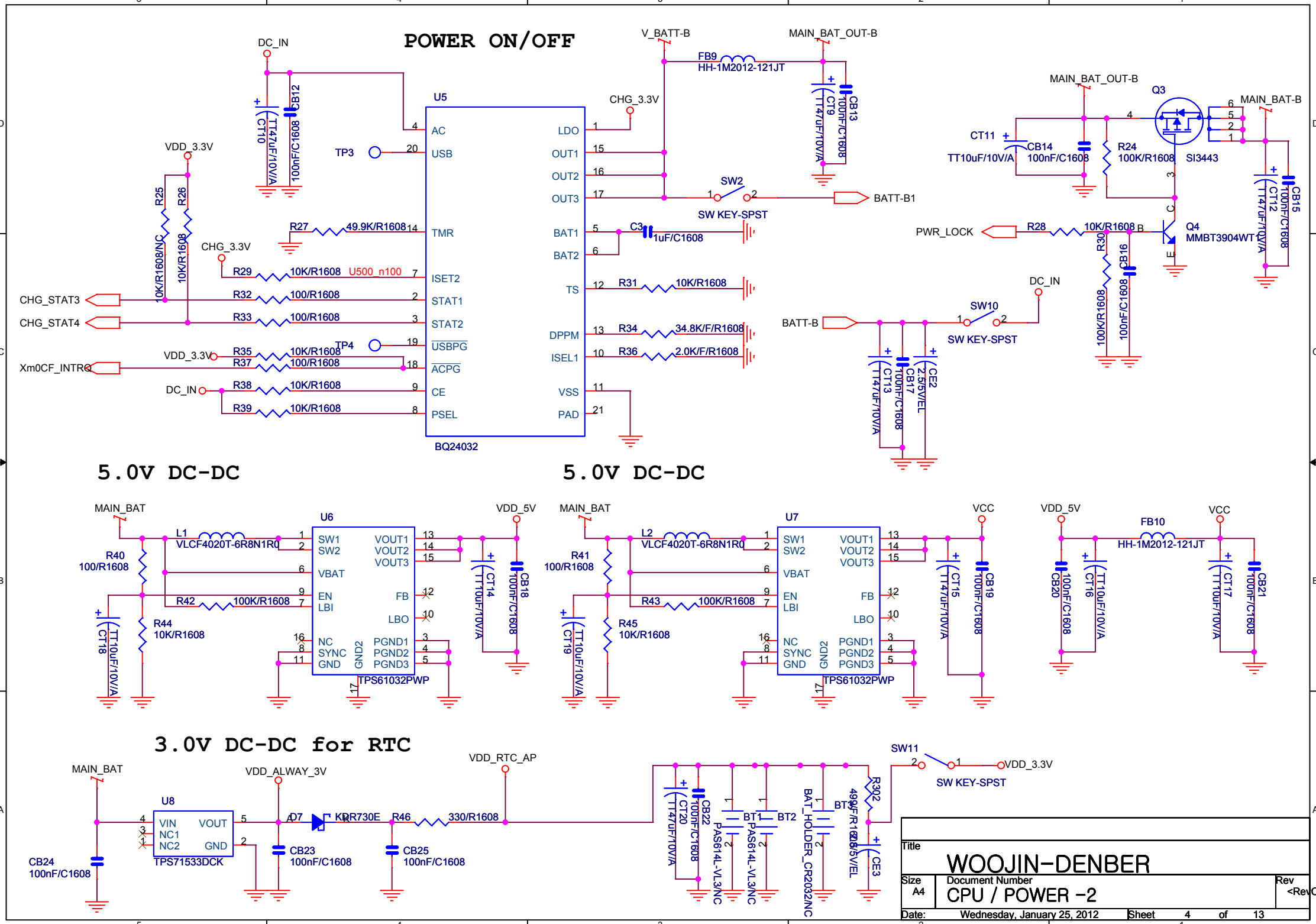
POWER ON/OFF
DC_IN
CT10
TT47uF/10V/A
CB12
100nF/C1608
U5
AC
USB
TMR
ISET2
STAT1
STAT2
USBPG
ACPG
CE
PSEL
LDO
OUT1
OUT2
OUT3
BAT1
BAT2
TS
DPPM
ISEL1
VSS
PAD
BQ24032
TP3
TP4
VDD_3.3V
R25
10K/R1608/NC
R26
10K/R1608
R27
49.9K/R1608
CHG_3.3V
R29
10K/R1608
U500_n100
CHG_STAT3
CHG_STAT4
R32
100/R1608
R33
100/R1608
Xm0CF_INTRQ
R35
10K/R1608
R37
100/R1608
R38
10K/R1608
R39
10K/R1608
V_BATT-B
FB9
HH-1M2012-121JT
MAIN_BAT_OUT-B
CT9
TT47uF/10V/A
CB13
100nF/C1608
SW2
SW KEY-SPST
BATT-B1
C3
1uF/C1608
R31
10K/R1608
R34
34.8K/F/R1608
R36
2.0K/F/R1608
BATT-B
SW10
SW KEY-SPST
CT13
TT47uF/10V/A
CB17
100nF/C1608
CE2
2.5/5V/EL
Q3
SI3443
CT11
TT10uF/10V/A
CB14
100nF/C1608
R24
100K/R1608
MAIN_BAT-B
CT12
TT47uF/10V/A
CB15
100nF/C1608
PWR_LOCK
R28
10K/R1608
Q4
MMBT3904WT1
R30
100K/R1608
CB16
100nF/C1608
5.0V DC-DC
MAIN_BAT
R40
100/R1608
L1
VLCF4020T-6R8N1R0
U6
SW1
SW2
VBAT
EN
LBI
NC
SYNC
GND
VOUT1
VOUT2
VOUT3
FB
LBO
PGND1
PGND2
PGND3
TPS61032PWP
R42
100K/R1608
R44
10K/R1608
CT18
TT10uF/10V/A
CT14
TT10uF/10V/A
CB18
100nF/C1608
VDD_5V
R41
100/R1608
L2
VLCF4020T-6R8N1R0
U7
R43
100K/R1608
R45
10K/R1608
CT19
TT10uF/10V/A
CT15
TT47uF/10V/A
CB19
100nF/C1608
VCC
FB10
HH-1M2012-121JT
CB20
100nF/C1608
CT16
TT10uF/10V/A
CT17
TT10uF/10V/A
CB21
100nF/C1608
3.0V DC-DC for RTC
MAIN_BAT
U8
VIN
NC1
NC2
VOUT
GND
TPS71533DCK
CB24
100nF/C1608
VDD_ALWAY_3V
CB23
100nF/C1608
D7
KRR730E
R46
330/R1608
CB25
100nF/C1608
VDD_RTC_AP
CT20
TT47uF/10V/A
CB22
100nF/C1608
BT1
PAS614L-VL3/NC
BT2
PAS614L-VL3/NC
BAT_HOLDER_CR2032/NC
R302
499/F/R1608
CE3
2.5/5V/EL
SW11
SW KEY-SPST
VDD_3.3V
Title
WOOJIN-DENBER
Size
A4
Document Number
CPU / POWER -2
Rev
Date:
Wednesday, January 25, 2012
Sheet
4
of
13

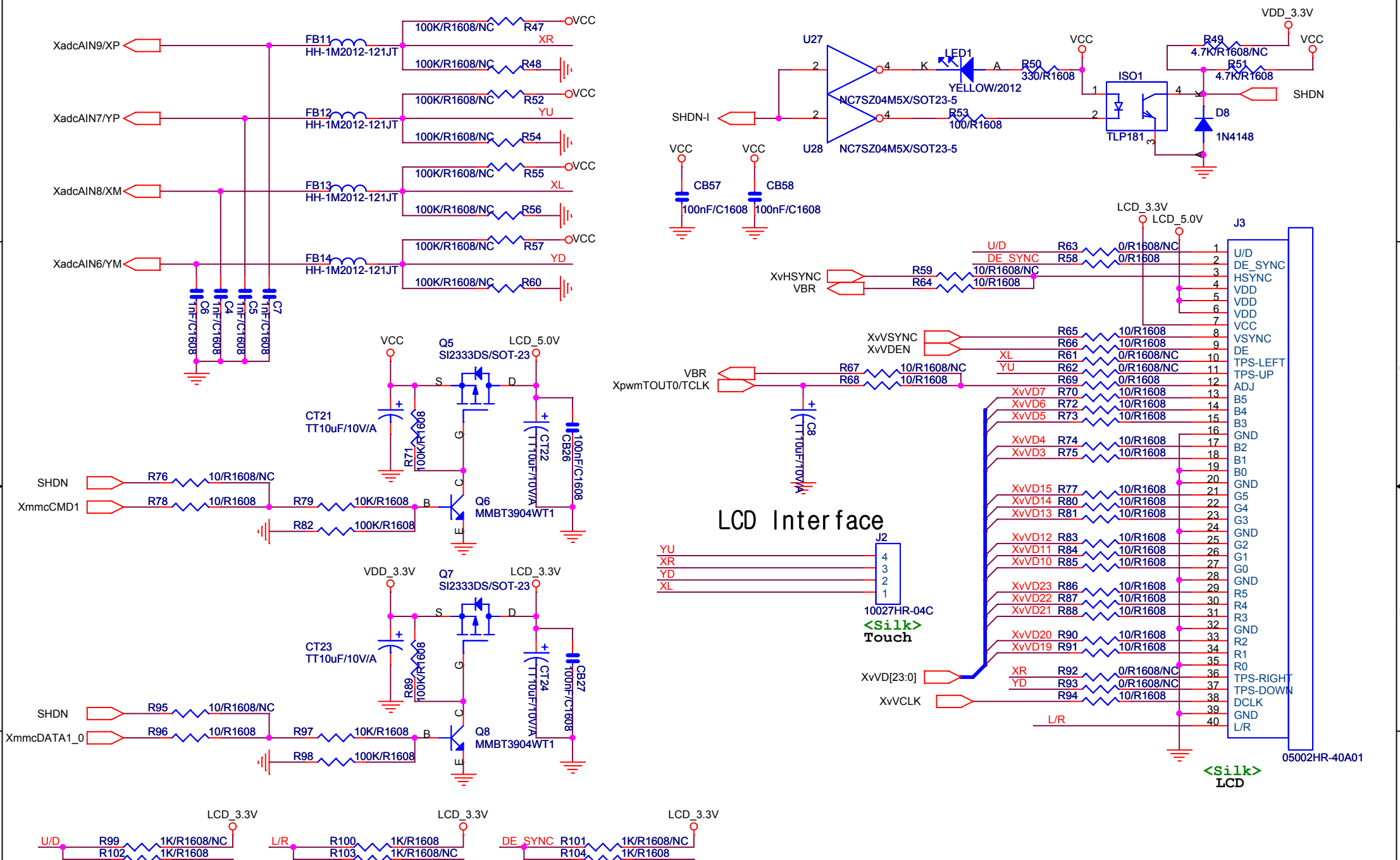

Title
WOOJIN-DENBER

Size	Document Number	Rev
A4	CPU BASE / LCD	<RevCo

Date: Tuesday, January 31, 2012 Sheet 5 of 13

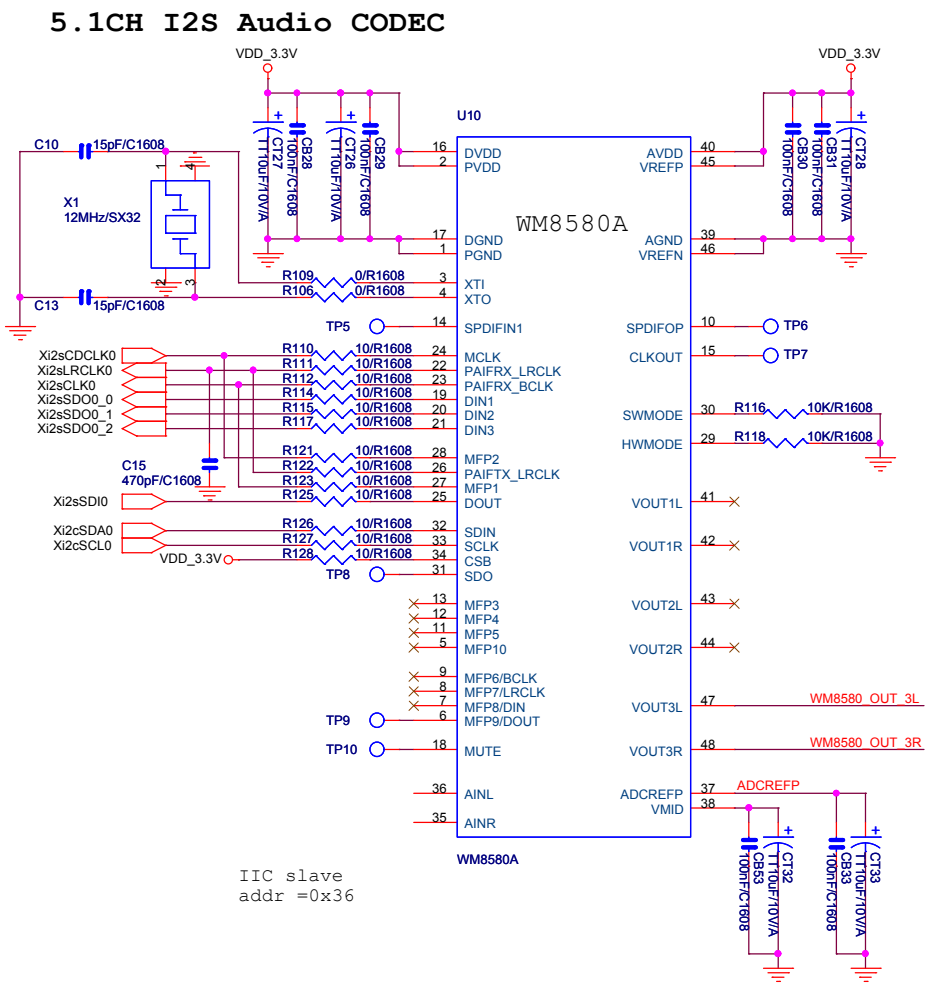

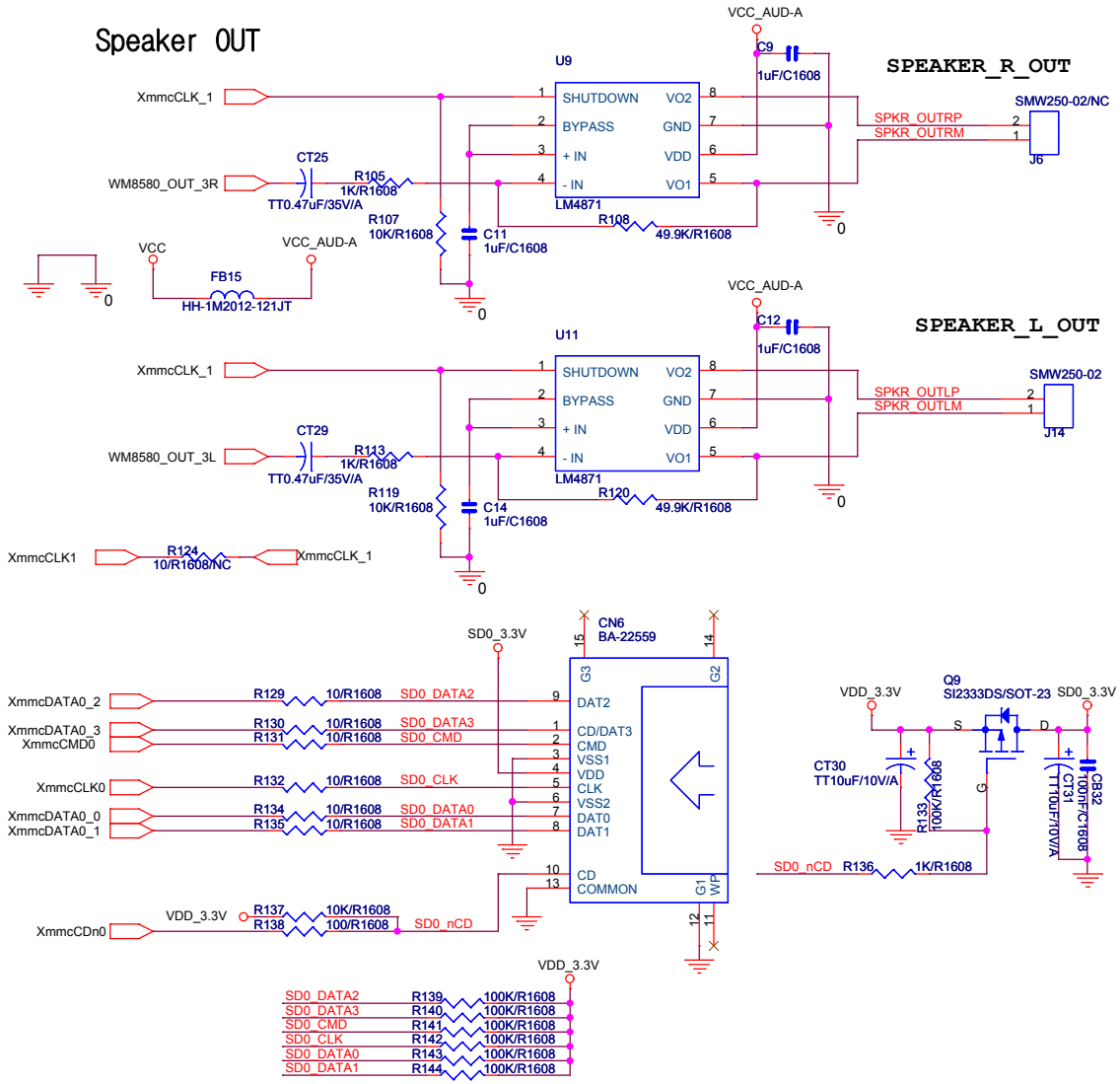

Title	WOOJIN-DENBER	
Size B	Document Number CPU BASE/ AUDIO,SDCARD	Rev <RevCode>
Date: Tuesday, January 31, 2012	Sheet 6 of 13	

USB DEBUG

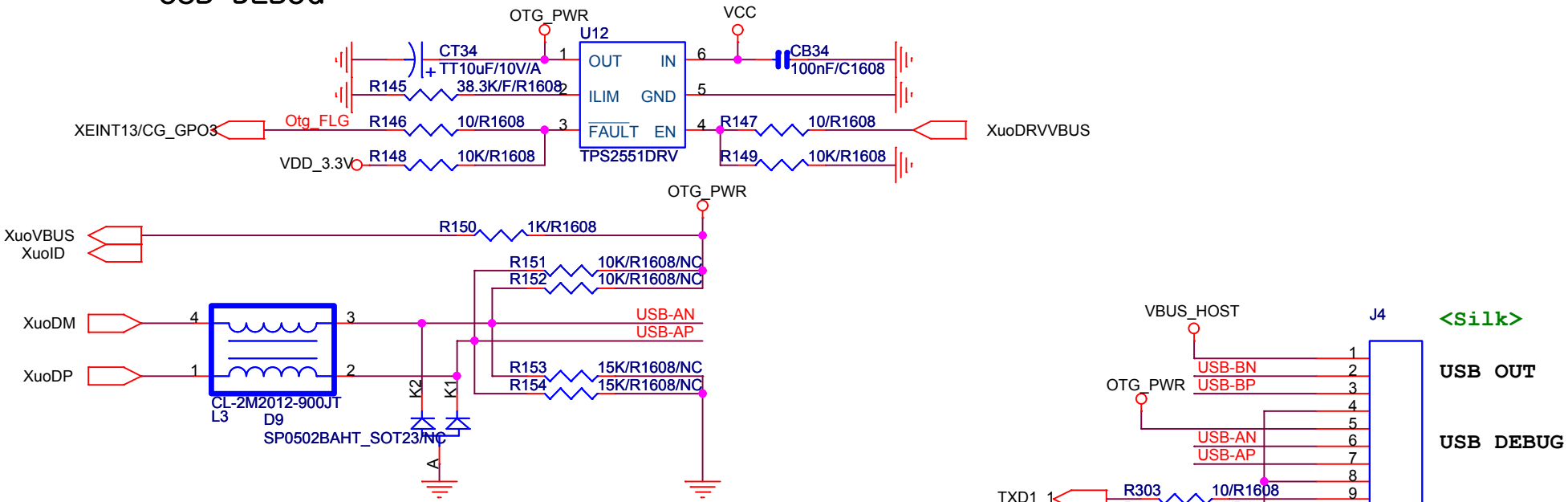

USB

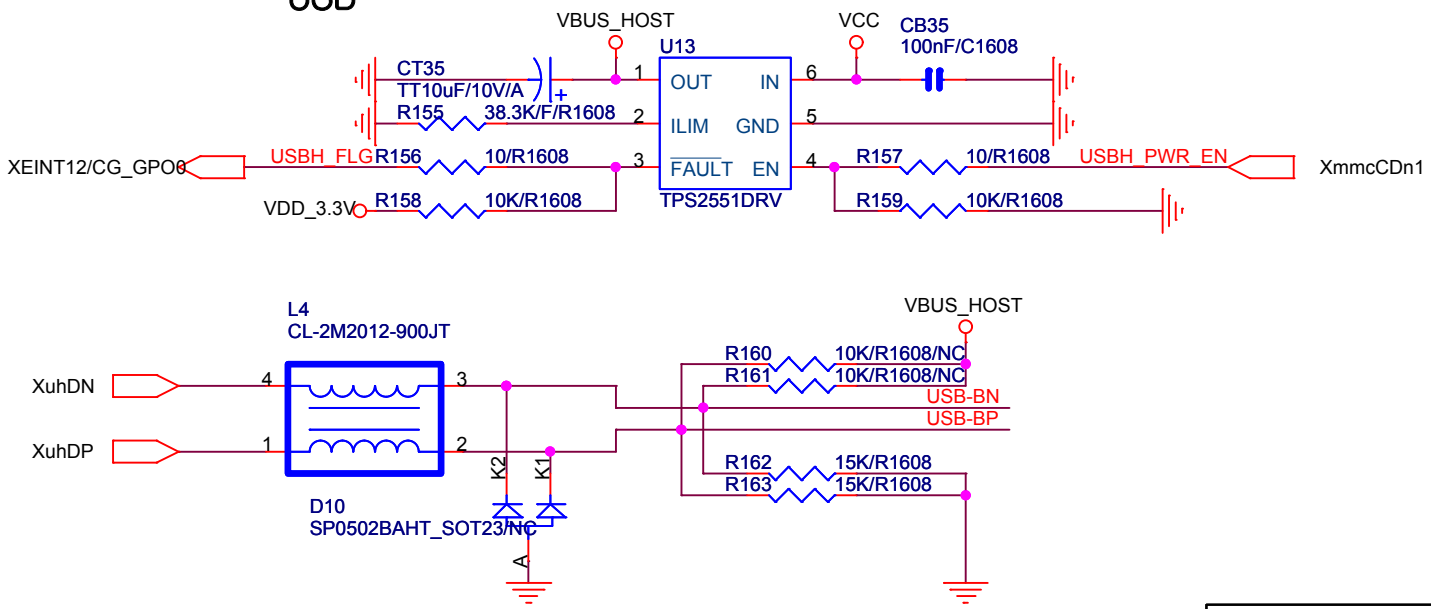

Title	WOOJIN-DENBER	
Size A	Document Number CPU BASE / USB	Rev <RevCode>
Date: Monday, January 30, 2012	Sheet 7 of 13	

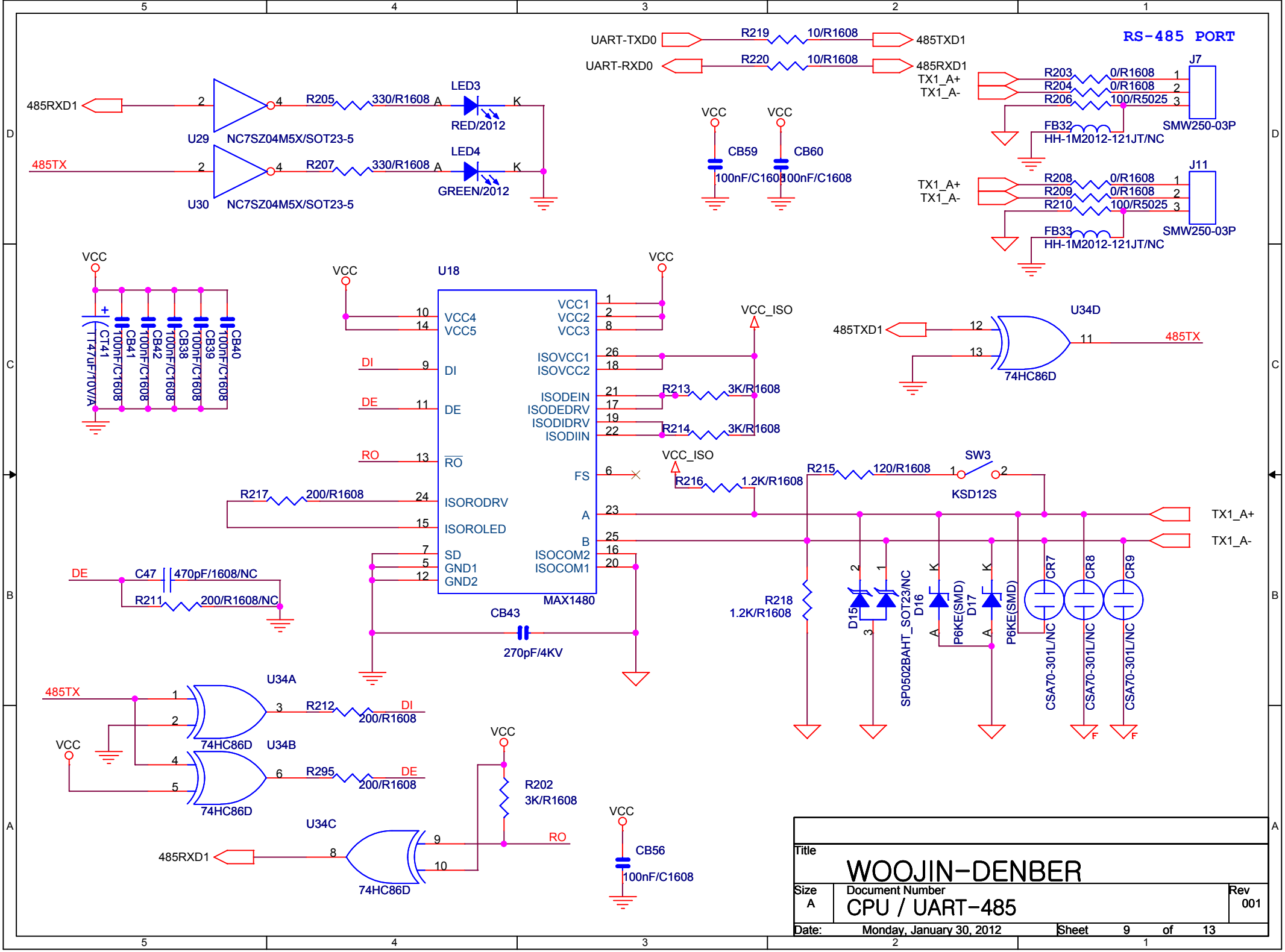
RS-485 PORT
UART-TXD0
R219
10/R1608
485TXD1
UART-RXD0
R220
10/R1608
485RXD1
TX1_A+
TX1_A-
J7
R203
0/R1608
R204
0/R1608
R206
100/R5025
FB32
HH-1M2012-121JT/NC
SMW250-03P
J11
R208
0/R1608
R209
0/R1608
R210
100/R5025
FB33
HH-1M2012-121JT/NC
SMW250-03P
485RXD1
U29
NC7SZ04M5X/SOT23-5
R205
330/R1608
LED3
RED/2012
485TX
U30
NC7SZ04M5X/SOT23-5
R207
330/R1608
LED4
GREEN/2012
VCC
CB59
100nF/C1608
CB60
100nF/C1608
VCC
CT41
47uF/10V/A
CB41
100nF/C1608
CB42
100nF/C1608
CB38
100nF/C1608
CB39
100nF/C1608
CB40
100nF/C1608
U18
VCC4
VCC5
DI
DE
RO
ISORODRV
ISOROLED
SD
GND1
GND2
VCC1
VCC2
VCC3
ISOVCC1
ISOVCC2
ISODEIN
ISODEDRV
ISODIDRV
ISODIIN
FS
A
B
ISOCOM2
ISOCOM1
MAX1480
VCC_ISO
R213
3K/R1608
R214
3K/R1608
R216
1.2K/R1608
R217
200/R1608
C47
470pF/1608/NC
R211
200/R1608/NC
CB43
270pF/4KV
485TXD1
U34D
74HC86D
485TX
R215
120/R1608
SW3
KSD12S
TX1_A+
TX1_A-
R218
1.2K/R1608
D15
SP0502BAHT_SOT23/NC
D16
P6KE(SMD)
D17
P6KE(SMD)
CR7
CSA70-301L/NC
CR8
CSA70-301L/NC
CR9
CSA70-301L/NC
U34A
74HC86D
R212
200/R1608
U34B
74HC86D
R295
200/R1608
R202
3K/R1608
U34C
74HC86D
CB56
100nF/C1608
Title
WOOJIN-DENBER
Size
A
Document Number
CPU / UART-485
Rev
001
Date:
Monday, January 30, 2012
Sheet
9
of
13

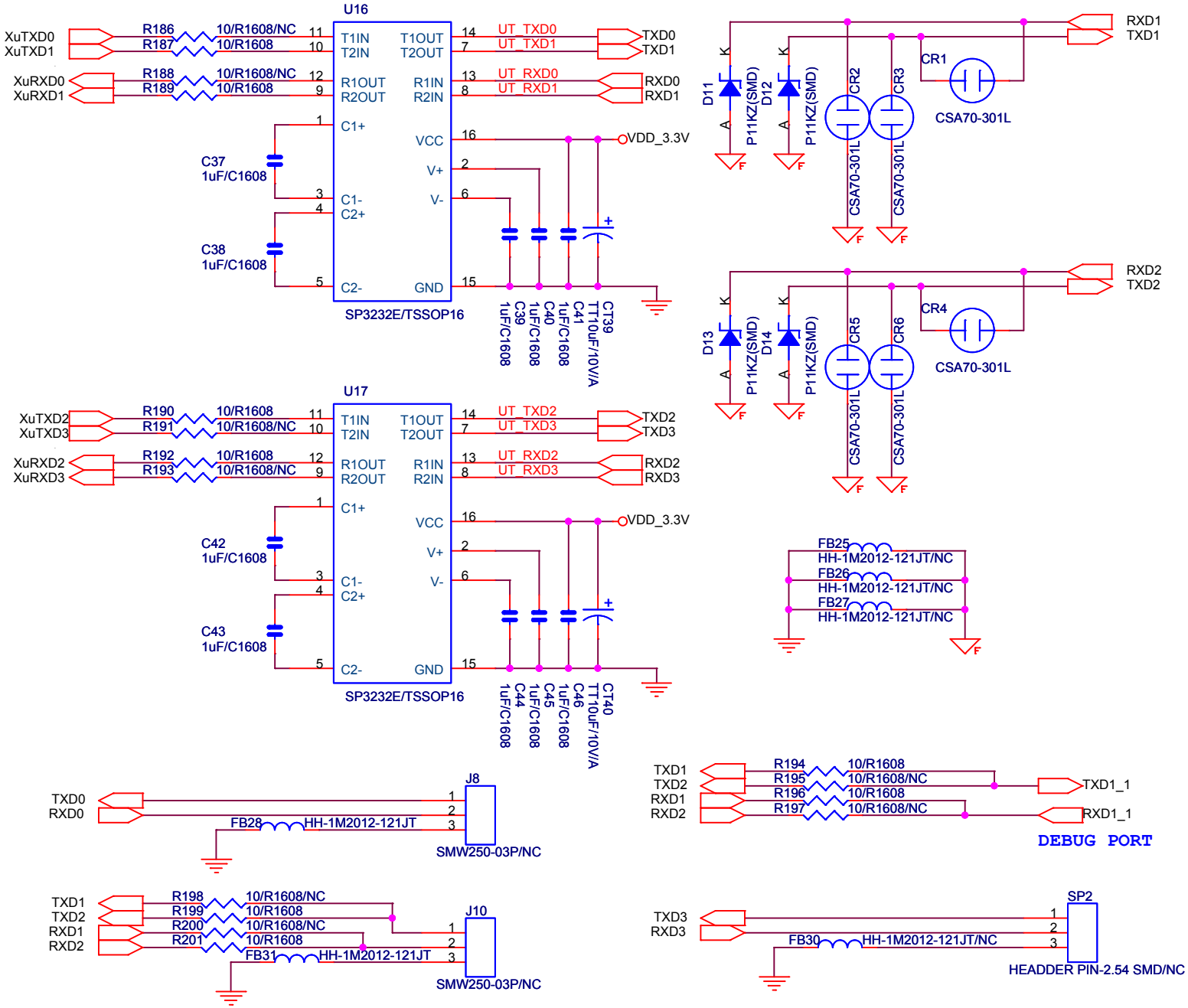

Title	WOOJIN-DENBER	
Size A4	Document Number CPU / UART	Rev 001
Date: Tuesday, January 31, 2012	Sheet 9 of 13	

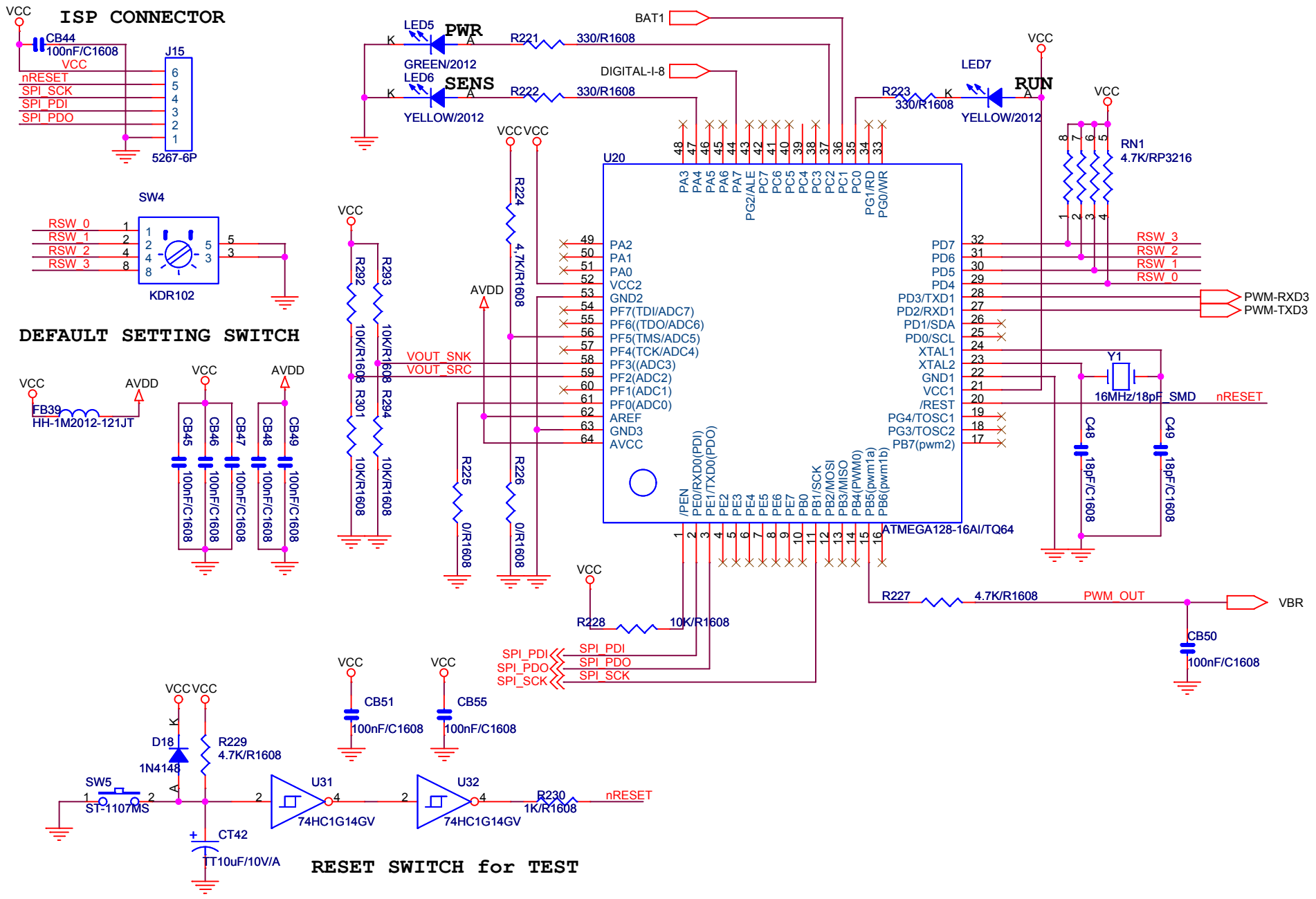

Title	WOOJIN-DENBER	
Size A4	Document Number CPU / ALSB	Rev 001
Date: Tuesday, January 31, 2012	Sheet 10 of 13	

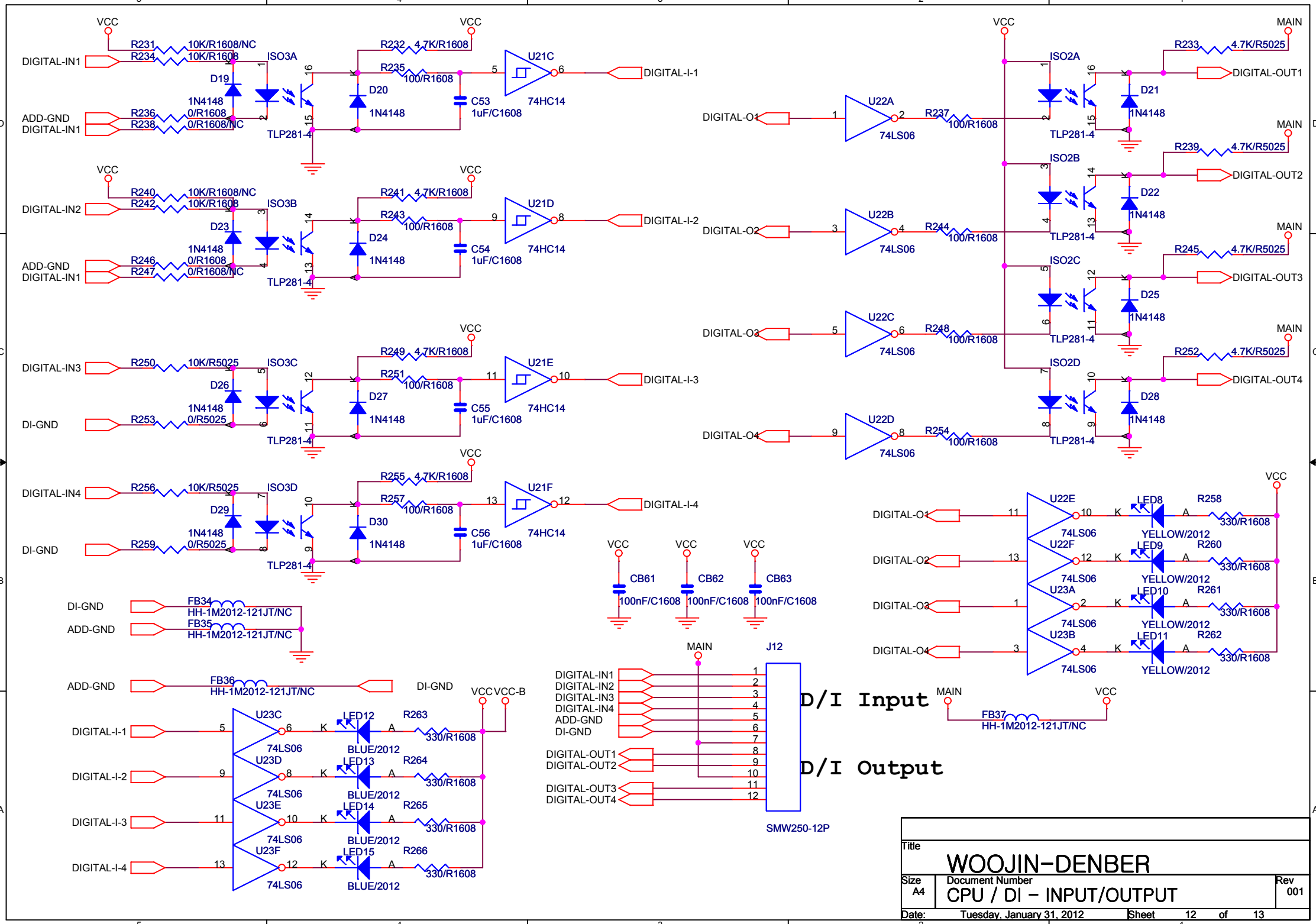

Title
WOOJIN-DENBER

Size	Document Number	Rev
A4	CPU / DI – INPUT/OUTPUT	001

Date: Tuesday, January 31, 2012 Sheet 12 of 13

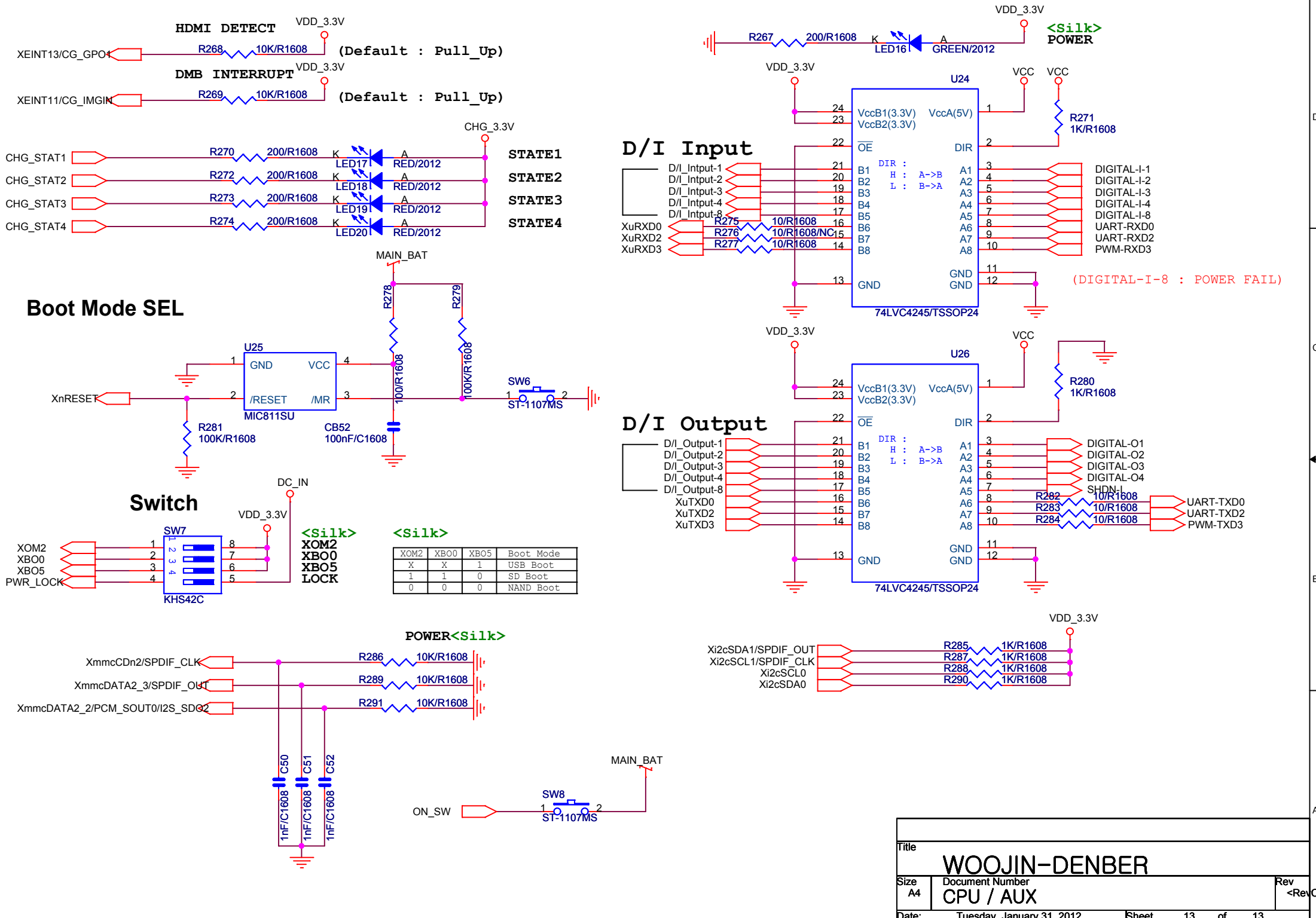

Title
WOOJIN-DENBER

Size A4 | Document Number CPU / AUX | Rev <RevCo

Date: Tuesday, January 31, 2012 | Sheet 13 of 13