CTP-BR-4001-Z

50 Ohm BNC Jack

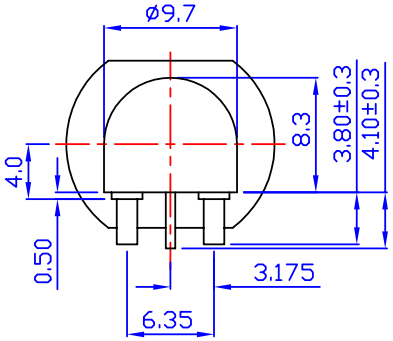

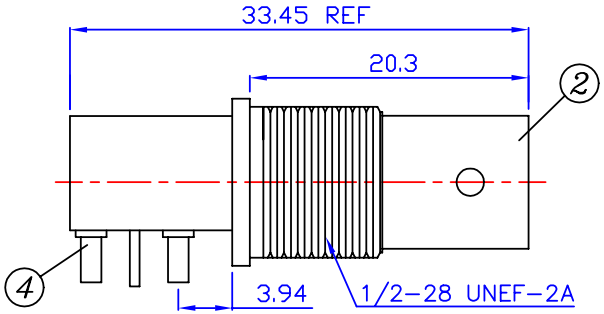

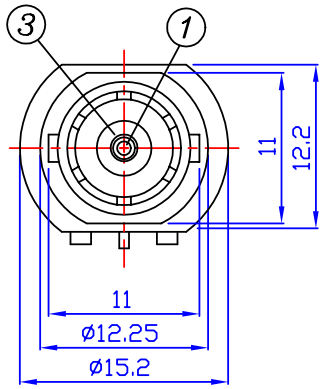

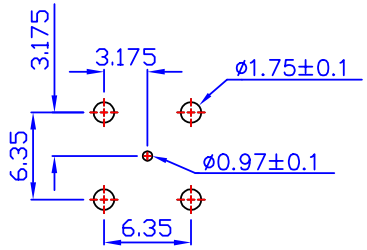

RECOMMENDED PC BOARD LAYOUT WITHOUT MOUNTING POSTS

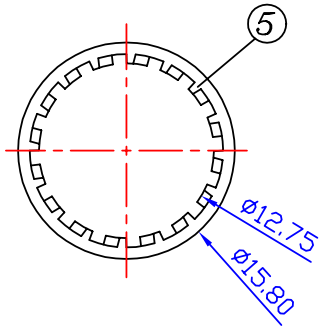

LOCK WASHER

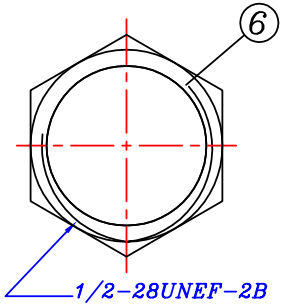

CLAMP NUT

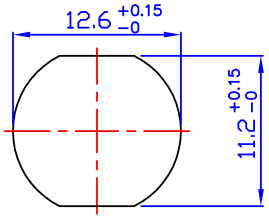

RECOMMENDED MOUNTING HOLE
MAXIMUM PANEL THICKNESS:5.5MM

UNLESS OTHERWISE SPECIFIED:
DIMENSIONS ARE IN mm
TOLERANCES ARE:
X. ± 0.5
X.X ± 0.3
X.XX ± 0.2
ANGLES ± 3 DEG

MATERIAL & FINISH

① *CENTER CONTACT : PHOSPHOR BRONZE, GOLD PLATING*
② *BODY : ZINC ALLOY, NICKEL PLATING*
③ *INSULATOR : TPX*
④ *MOUNTING POST : BRASS, TIN PLATED*
⑤ *WASHER : STEEL, NICKEL PLATING*
⑥ *NUT : BRASS, NICKEL PLATING*

Phone 1-800-809-2751 Fax 1-510-440-0579
www.connect-tech-products.com • info@connect-tech-products.com
4428 Technology Drive • Fremont, CA 94538, USA • 510-498-8815 • Fax: 510-440-0579