LM1086 1.5A Low Dropout Positive Regulators

Check for Samples: LM1086

FEATURES

- **Available in 1.8V, 2.5V, 2.85V, 3.3V, 3.45V, 5V and Adjustable Versions**
- **Current Limiting and Thermal Protection**
- **Output Current 1.5A**
- **Line Regulation 0.015% (typical)**
- **Load Regulation 0.1% (typical)**

APPLICATIONS

- **SCSI-2 Active Terminator**
- **High Efficiency Linear Regulators**
- **Battery Charger**
- **Post Regulation for Switching Supplies**
- **Constant Current Regulator**
- **Microprocessor Supply**

DESCRIPTION

The LM1086 is a series of low dropout positive voltage regulators with a maximum dropout of 1.5V at 1.5A of load current. It has the same pin-out as TI's industry standard LM317.

The LM1086 is available in an adjustable version, which can set the output voltage with only two external resistors. It is also available in six fixed voltages: 1.8V, 2.5V, 2.85V, 3.3V, 3.45V and 5.0V. The fixed versions integrate the adjust resistors.

The LM1086 circuit includes a zener trimmed bandgap reference, current limiting and thermal shutdown.

Connection Diagram

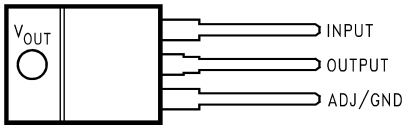

Figure 1. TO-220 Top View

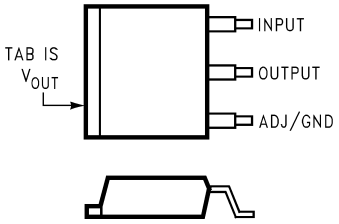

Figure 2. DDPAK/TO-263 Top View

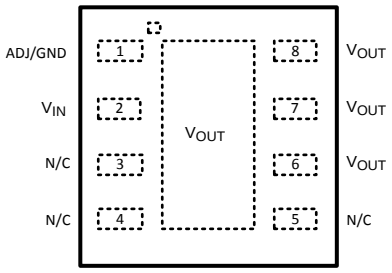

Pins 6, 7, and 8 must be tied together.

Figure 3. WSON Top View

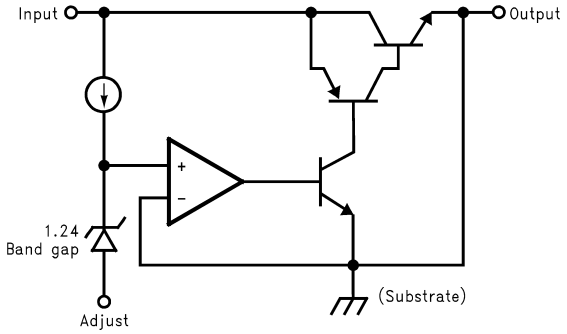

Figure 4. Basic Functional Diagram, Adjustable Version

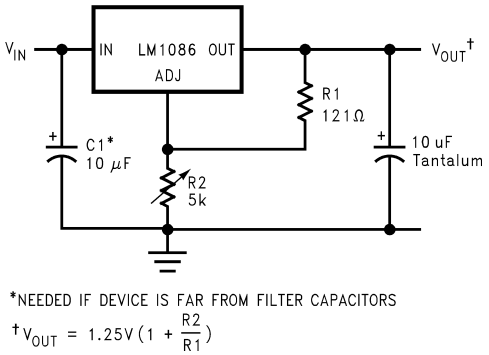

Figure 5. Application Circuit 1.2V to 15V Adjustable Regulator

Please be aware that an important notice concerning availability, standard warranty, and use in critical applications of Texas Instruments semiconductor products and disclaimers thereto appears at the end of this data sheet.

All trademarks are the property of their respective owners.

PRODUCTION DATA information is current as of publication date. Products conform to specifications per the terms of the Texas Instruments standard warranty. Production processing does not necessarily include testing of all parameters.

Copyright © 2004–2005, Texas Instruments Incorporated

Simplified Schematic

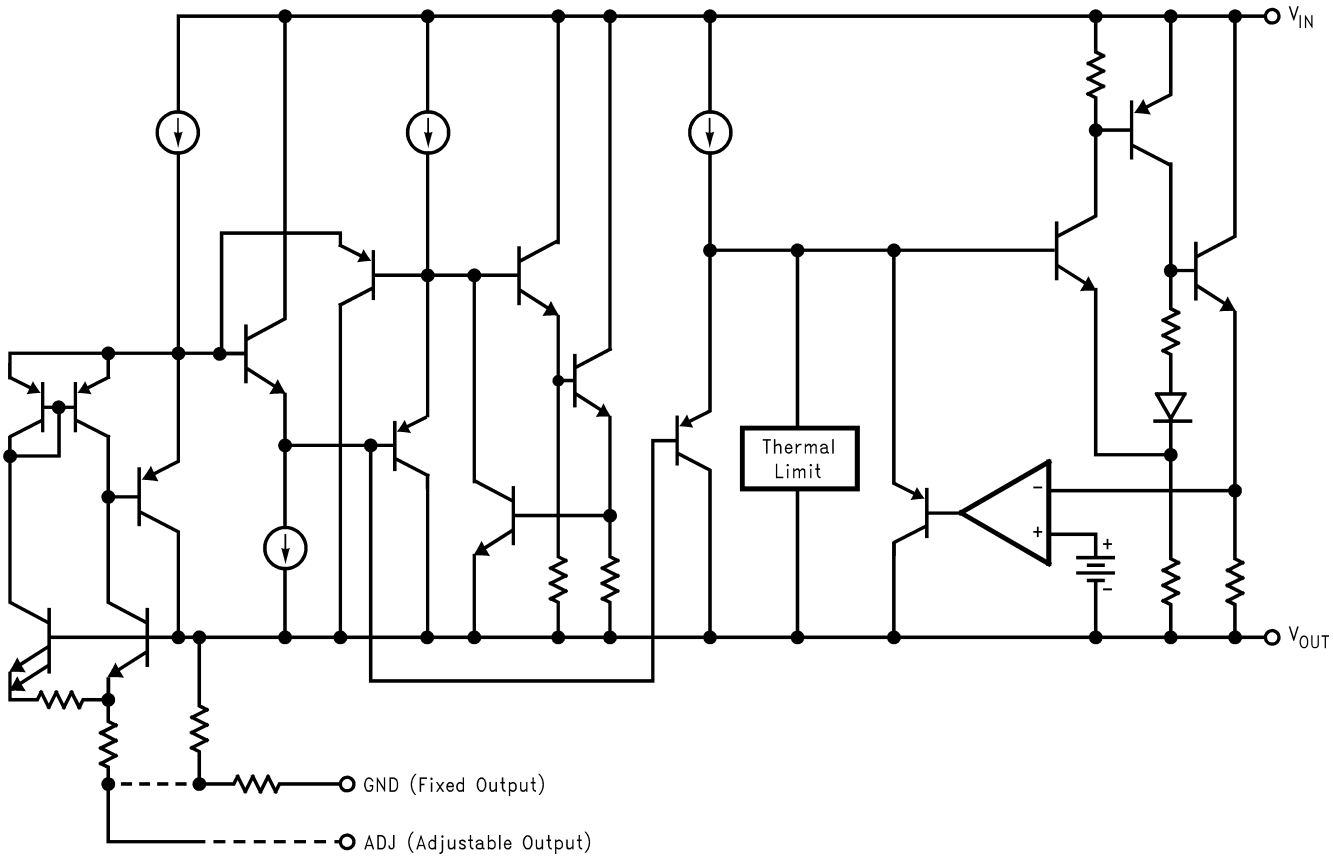

Copyright © 2004–2005, Texas Instruments Incorporated

These devices have limited built-in ESD protection. The leads should be shorted together or the device placed in conductive foam during storage or handling to prevent electrostatic damage to the MOS gates.

Absolute Maximum Ratings[1][2]

Maximum Input-to-Output Voltage Differential	
LM1086-ADJ	29V
LM1086-1.8	27V
LM1086-2.5	27V
LM1086-2.85	27V
LM1086-3.3	27V
LM1086-3.45	27V
LM1086-5.0	25V
Power Dissipation [3]	Internally Limited
Junction Temperature (T_J)[4]	150°C
Storage Temperature Range	-65°C to 150°C
Lead Temperature	260°C, to 10 sec
ESD Tolerance [5]	2000V

(1) Absolute Maximum Ratings indicate limits beyond which damage to the device may occur. Operating Ratings indicate conditions for which the device is intended to be functional, but specific performance is not ensured. For ensured specifications and the test conditions, see the Electrical Characteristics.
(2) If Military/Aerospace specified devices are required, please contact the Texas Instruments Sales Office/Distributors for availability and specifications.
(3) Power dissipation is kept in a safe range by current limiting circuitry. Refer to OVERLOAD RECOVERY in Application Note. The value θ_{JA} for the WSON package is specifically dependent on PCB trace area, trace material, and the number of thermal vias. For improved thermal resistance and power dissipation for the WSON package, refer to Application Note AN-1187 (literature number SNOA401).
(4) The maximum power dissipation is a function of $T_{J(MAX)}$, θ_{JA}, and T_A. The maximum allowable power dissipation at any ambient temperature is $P_D = (T_{J(MAX)} – T_A)/\theta_{JA}$. All numbers apply for packages soldered directly into a PC board. Refer to Thermal Considerations in the Application Notes.
(5) For testing purposes, ESD was applied using human body model, 1.5kΩ in series with 100pF.

Operating Ratings[1]

Junction Temperature Range (T_J) [2]		
"C" Grade	Control Section	0°C to 125°C
	Output Section	0°C to 150°C
"I" Grade	Control Section	−40°C to 125°C
	Output Section	−40°C to 150°C

(1) Absolute Maximum Ratings indicate limits beyond which damage to the device may occur. Operating Ratings indicate conditions for which the device is intended to be functional, but specific performance is not ensured. For ensured specifications and the test conditions, see the Electrical Characteristics.
(2) The maximum power dissipation is a function of $T_{J(MAX)}$, θ_{JA}, and T_A. The maximum allowable power dissipation at any ambient temperature is $P_D = (T_{J(MAX)} – T_A)/\theta_{JA}$. All numbers apply for packages soldered directly into a PC board. Refer to Thermal Considerations in the Application Notes.

Copyright © 2004–2005, Texas Instruments Incorporated

Electrical Characteristics

Typicals and limits appearing in normal type apply for T_J = 25°C. Limits appearing in **Boldface** type apply over the entire junction temperature range for operation.

Symbol	Parameter	Conditions	Min (1)	Typ (2)	Max (1)	Units
V_{REF}	Reference Voltage	LM1086-ADJ I_{OUT} = 10mA, $V_{IN}-V_{OUT}$ = 3V 10mA ≤I_{OUT} ≤ $I_{FULL\ LOAD}$, 1.5V ≤ $V_{IN}-V_{OUT}$ ≤ 15V (3)	1.238 **1.225**	1.250 **1.250**	1.262 **1.270**	V V
V_{OUT}	Output Voltage (3)	LM1086-1.8 I_{OUT} = 0mA, V_{IN} = 5V 0 ≤ I_{OUT} ≤ $I_{FULL\ LOAD}$, 3.3V ≤ V_{IN} ≤ 18V	1.782 **1.764**	1.8 **1.8**	1.818 **1.836**	V
		LM1086-2.5 I_{OUT} = 0mA, V_{IN} = 5V 0 ≤ I_{OUT} ≤ $I_{FULL\ LOAD}$, 4.0V ≤ V_{IN} ≤ 18V	2.475 **2.450**	2.50 2.50	2.525 **2.55**	V
		LM1086-2.85 I_{OUT} = 0mA, V_{IN} = 5V 0 ≤ I_{OUT} ≤ $I_{FULL\ LOAD}$, 4.35V ≤ V_{IN} ≤ 18V	2.82 **2.79**	2.85 **2.85**	2.88 **2.91**	V V
		LM1086-3.3 I_{OUT} = 0mA, V_{IN} = 5V 0 ≤ I_{OUT} ≤ $I_{FULL\ LOAD}$, 4.75V ≤ V_{IN} ≤ 18V	3.267 **3.235**	3.300 **3.300**	3.333 **3.365**	V V
		LM1086-3.45 I_{OUT} = 0mA, V_{IN} = 5V 0 ≤ I_{OUT} ≤ $I_{FULL\ LOAD}$, 4.95V ≤ V_{IN} ≤ 18V	3.415 3.381	3.45 3.45	3.484 3.519	V V
		LM1086-5.0 I_{OUT} = 0mA, V_{IN} = 8V 0 ≤ I_{OUT} ≤ $I_{FULL\ LOAD}$, 6.5V ≤ V_{IN} ≤ 20V	4.950 **4.900**	5.000 **5.000**	5.050 **5.100**	V V
ΔV_{OUT}	Line Regulation (4)	LM1086-ADJ I_{OUT} =10mA, 1.5V≤ (V_{IN}-V_{OUT}) ≤ 15V		0.015 **0.035**	0.2 **0.2**	% %
		LM1086-1.8 I_{OUT} = 0mA, 3.3V ≤ V_{IN} ≤ 18V		0.3 **0.6**	6 **6**	mV
		LM1086-2.5 I_{OUT} = 0mA, 4.0V ≤ V_{IN} ≤ 18V		0.3 **0.6**	6 **6**	mV
		LM1086-2.85 I_{OUT} = 0mA, 4.35V ≤ V_{IN} ≤ 18V		0.3 **0.6**	6 **6**	mV mV
		LM1086-3.3 I_{OUT} = 0mA, 4.5V ≤ V_{IN} ≤ 18V		0.5 **1.0**	10 **10**	mV mV
		LM1086-3.45 I_{OUT} = 0mA, 4.95V ≤ V_{IN} ≤ 18V		0.5 **1.0**	10 **10**	mV mV
		LM1086-5.0 I_{OUT} = 0mA, 6.5V ≤ V_{IN} ≤ 20V		0.5 **1.0**	10 **10**	mV mV
ΔV_{OUT}	Load Regulation (4)	LM1086-ADJ (V_{IN}-V_{OUT}) = 3V, 10mA ≤ I_{OUT} ≤ $I_{FULL\ LOAD}$		0.1 **0.2**	0.3 **0.4**	% %
		LM1086-1.8 ,2.5, 2.85 V_{IN} = 5V, 0 ≤ I_{OUT} ≤ $I_{FULL\ LOAD}$		3 **6**	12 **20**	mV mV
		LM1086-3.3, 3.45 V_{IN} = 5V, 0 ≤ I_{OUT} ≤ $I_{FULL\ LOAD}$		3 **7**	15 **25**	mV mV
		LM1086-5.0 V_{IN} = 8V, 0 ≤ I_{OUT} ≤ $I_{FULL\ LOAD}$		5 **10**	20 **35**	mV mV
	Dropout Voltage (5)	LM1086-ADJ, 1.8, 2.5,2.85, 3.3, 3.45, 5 ΔV_{REF}, ΔV_{OUT} = 1%, I_{OUT} = 1.5A		**1.3**	**1.5**	V

(1) All limits are specified by testing or statistical analysis.
(2) Typical Values represent the most likely parametric norm.
(3) $I_{FULL\ LOAD}$ is defined in the current limit curves. The $I_{FULL\ LOAD}$ Curve defines current limit as a function of input-to-output voltage. Note that 15W power dissipation for the LM1086 is only achievable over a limited range of input-to-output voltage.
(4) Load and line regulation are measured at constant junction temperature, and are specified up to the maximum power dissipation of 15W. Power dissipation is determined by the input/output differential and the output current. Ensured maximum power dissipation will not be available over the full input/output range.
(5) Dropout voltage is specified over the full output current range of the device.

Copyright © 2004–2005, Texas Instruments Incorporated

Electrical Characteristics (continued)

Typicals and limits appearing in normal type apply for T_J = 25°C. Limits appearing in **Boldface** type apply over the entire junction temperature range for operation.

Symbol	Parameter	Conditions	Min (1)	Typ (2)	Max (1)	Units
I_{LIMIT}	Current Limit	LM1086-ADJ $V_{IN}-V_{OUT}$ = 5V $V_{IN}-V_{OUT}$ = 25V	 **1.50** **0.05**	 **2.7** **0.15**		 A A
		LM1086-1.8,2.5, 2.85, 3.3, 3.45, V_{IN} = 8V	**1.5**	**2.7**		A
		LM1086-5.0, V_{IN} = 10V	**1.5**	**2.7**		A
	Minimum Load Current (6)	LM1086-ADJ $V_{IN}-V_{OUT}$ = 25V		**5.0**	**10.0**	mA
	Quiescent Current	LM1086-1.8, 2.5, 2.85, V_{IN} ≤ 18V		**5.0**	**10.0**	mA
		LM1086-3.3, V_{IN} ≤ 18V		**5.0**	**10.0**	mA
		LM1086-3.45, V_{IN} ≤ 18V		**5.0**	**10.0**	mA
		LM1086-5.0, V_{IN} ≤ 20V		**5.0**	**10.0**	mA
	Thermal Regulation	T_A = 25°C, 30ms Pulse		0.008	0.04	%/W
	Ripple Rejection	f_{RIPPLE} = 120Hz, C_{OUT} = 25µF Tantalum, I_{OUT} = 1.5A				
		LM1086-ADJ, C_{ADJ} = 25µF, ($V_{IN}-V_O$) = 3V	**60**	**75**		dB
		LM1086-1.8, 2.5, 2.85, V_{IN} = 6V	**60**	**72**		dB
		LM1086-3.3, V_{IN}= 6.3V	**60**	**72**		dB
		LM1086-3.45, V_{IN}= 6.3V	**60**	**72**		dB
		LM1086-5.0 V_{IN} = 8V	**60**	**68**		dB
	Adjust Pin Current	LM1086		55	**120**	µA
	Adjust Pin Current Change	10mA ≤ I_{OUT} ≤ $I_{FULL\ LOAD}$, 1.5V ≤ ($V_{IN}-V_{OUT}$) ≤ 15V		**0.2**	**5**	µA
	Temperature Stability			**0.5**		%
	Long Term Stability	T_A = 125°C, 1000Hrs		0.3	1.0	%
	RMS Noise (% of V_{OUT})	10Hz ≤ f≤ 10kHz		0.003		%
θ_{JC}	Thermal Resistance Junction-to-Case	3-Lead DDPAK/TO-263: Control Section/Output Section 3-Lead TO-220: Control Section/Output Section			1.5/4.0 1.5/4.0	°C/W °C/W

(6) The minimum output current required to maintain regulation.

Copyright © 2004–2005, Texas Instruments Incorporated

Typical Performance Characteristics

Dropout Voltage vs. Output Current

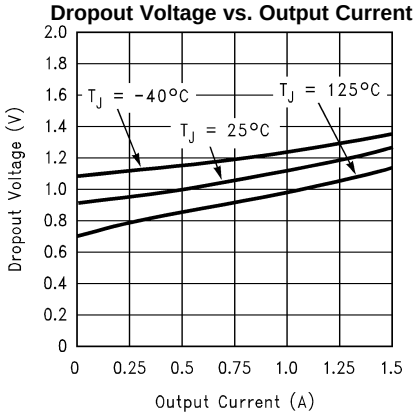

Figure 6.

Short-Circuit Current vs. Input/Output Difference

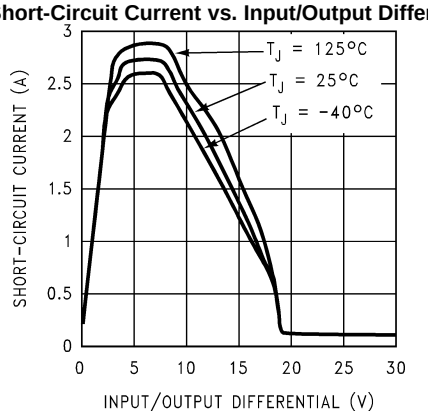

Figure 7.

Load Regulation vs. Temperature

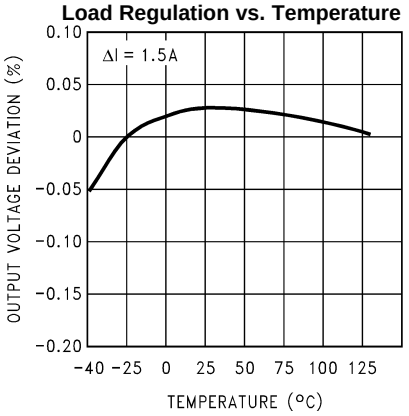

Figure 8.

Percent Change in Output Voltage vs. Temperature

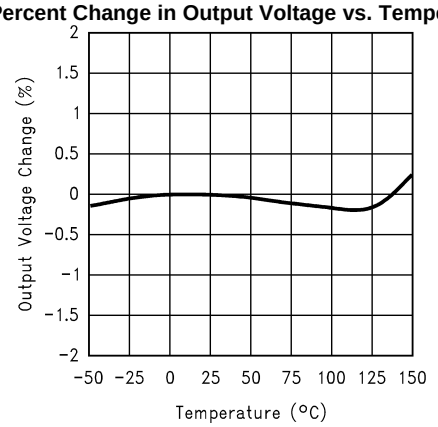

Figure 9.

Adjust Pin Current vs. Temperature

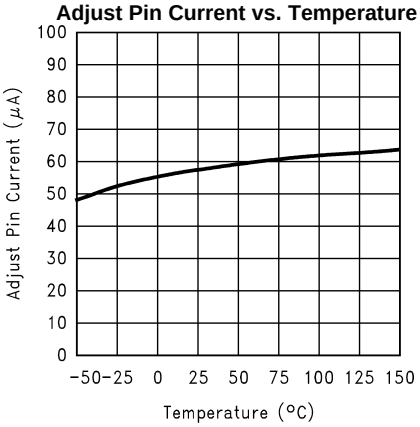

Figure 10.

Maximum Power Dissipation vs. Temperature

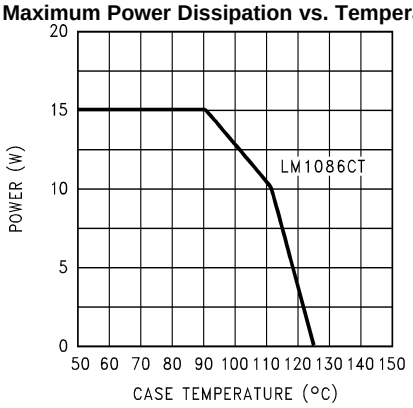

Figure 11.

Copyright © 2004–2005, Texas Instruments Incorporated

Typical Performance Characteristics (continued)

Ripple Rejection vs. Frequency (LM1086-Adj.)

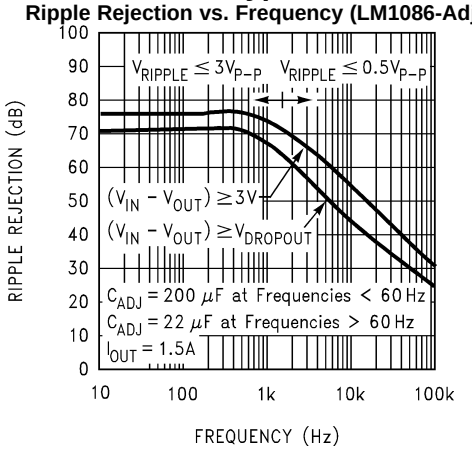

Figure 12.

Ripple Rejection vs. Output Current (LM1086-Adj.)

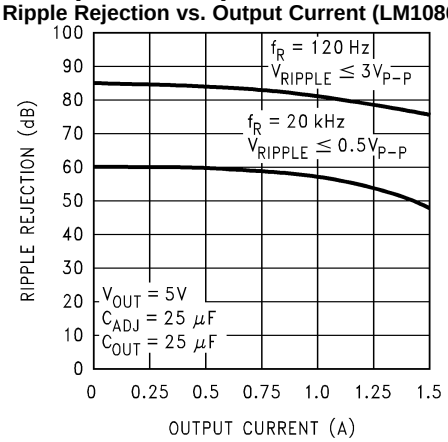

Figure 13.

Ripple Rejection vs. Frequency (LM1086-5)

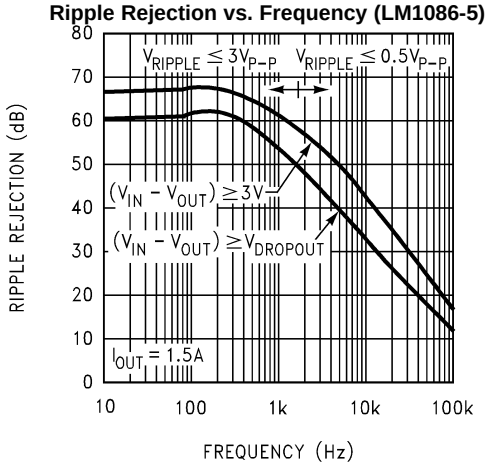

Figure 14.

Ripple Rejection vs. Output Current (LM1086-5)

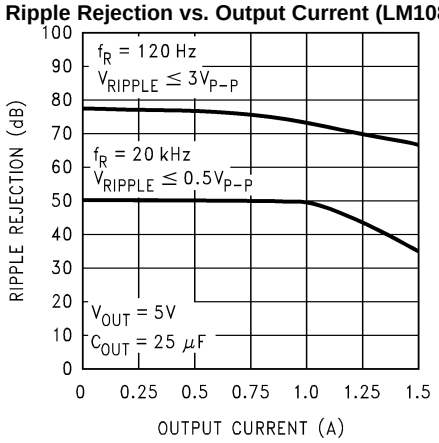

Figure 15.

Line Transient Response

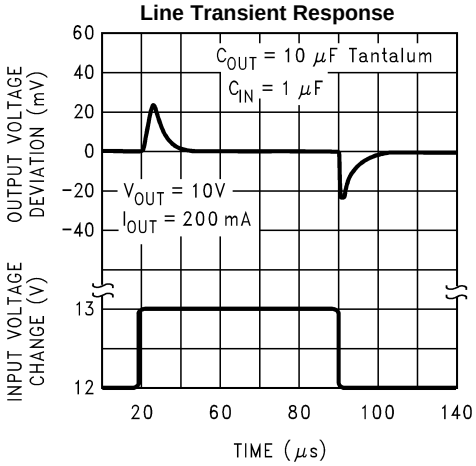

Figure 16.

Load Transient Response

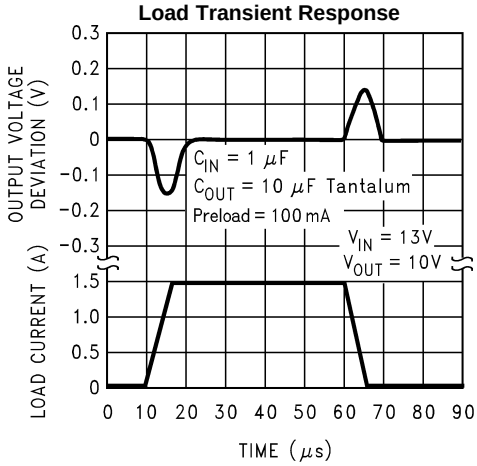

Figure 17.

APPLICATION NOTE

GENERAL

Figure 18 shows a basic functional diagram for the LM1086-Adj (excluding protection circuitry) . The topology is basically that of the LM317 except for the pass transistor. Instead of a Darlingtion NPN with its two diode voltage drop, the LM1086 uses a single NPN. This results in a lower dropout voltage. The structure of the pass transistor is also known as a quasi LDO. The advantage a quasi LDO over a PNP LDO is its inherently lower quiescent current. The LM1086 is specified to provide a minimum dropout voltage 1.5V over temperature, at full load.

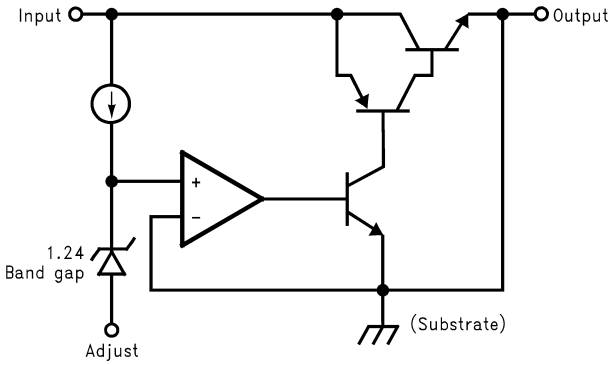

Figure 18. Basic Functional Diagram for the LM1086, excluding Protection circuitry

OUTPUT VOLTAGE

The LM1086 adjustable version develops at 1.25V reference voltage, (V_{REF}), between the output and the adjust terminal. As shown in figure 2, this voltage is applied across resistor R1 to generate a constant current I1. This constant current then flows through R2. The resulting voltage drop across R2 adds to the reference voltage to sets the desired output voltage.

The current I_{ADJ} from the adjustment terminal introduces an output error . But since it is small (120uA max), it becomes negligible when R1 is in the 100Ω range.

For fixed voltage devices, R1 and R2 are integrated inside the devices.

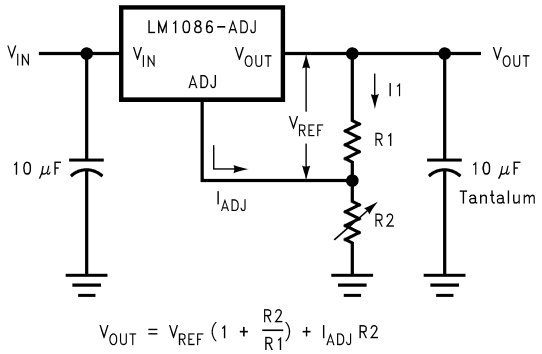

Figure 19. Basic Adjustable Regulator

STABILITY CONSIDERATION

Stability consideration primarily concern the phase response of the feedback loop. In order for stable operation, the loop must maintain negative feedback. The LM1086 requires a certain amount series resistance with capacitive loads. This series resistance introduces a zero within the loop to increase phase margin and thus increase stability. The equivalent series resistance (ESR) of solid tantalum or aluminum electrolytic capacitors is used to provide the appropriate zero (approximately 500 kHz).

Copyright © 2004–2005, Texas Instruments Incorporated

The Aluminum electrolytic are less expensive than tantalums, but their ESR varies exponentially at cold temperatures; therefore requiring close examination when choosing the desired transient response over temperature. Tantalums are a convenient choice because their ESR varies less than 2:1 over temperature.

The recommended load/decoupling capacitance is a 10uF tantalum or a 50uF aluminum. These values will assure stability for the majority of applications.

The adjustable versions allows an additional capacitor to be used at the ADJ pin to increase ripple rejection. If this is done the output capacitor should be increased to 22uF for tantalums or to 150uF for aluminum.

Capacitors other than tantalum or aluminum can be used at the adjust pin and the input pin. A 10uF capacitor is a reasonable value at the input. See RIPPLE REJECTION section regarding the value for the adjust pin capacitor.

It is desirable to have large output capacitance for applications that entail large changes in load current (microprocessors for example). The higher the capacitance, the larger the available charge per demand. It is also desirable to provide low ESR to reduce the change in output voltage:

$$\Delta V = \Delta I \times ESR$$

It is common practice to use several tantalum and ceramic capacitors in parallel to reduce this change in the output voltage by reducing the overall ESR.

Output capacitance can be increased indefinitely to improve transient response and stability.

RIPPLE REJECTION

Ripple rejection is a function of the open loop gain within the feed-back loop (refer to Figure 18 and Figure 19). The LM1086 exhibits 75dB of ripple rejection (typ.). When adjusted for voltages higher than V_{REF}, the ripple rejection decreases as function of adjustment gain: (1+R1/R2) or V_O/V_{REF}. Therefore a 5V adjustment decreases ripple rejection by a factor of four (−12dB); Output ripple increases as adjustment voltage increases.

However, the adjustable version allows this degradation of ripple rejection to be compensated. The adjust terminal can be bypassed to ground with a capacitor (C_{ADJ}). The impedance of the C_{ADJ} should be equal to or less than R1 at the desired ripple frequency. This bypass capacitor prevents ripple from being amplified as the output voltage is increased.

$$1/(2\pi * f_{RIPPLE} * C_{ADJ}) \leq R_1$$

LOAD REGULATION

The LM1086 regulates the voltage that appears between its output and ground pins, or between its output and adjust pins. In some cases, line resistances can introduce errors to the voltage across the load. To obtain the best load regulation, a few precautions are needed.

Figure 20 shows a typical application using a fixed output regulator. Rt1 and Rt2 are the line resistances. V_{LOAD} is less than the V_{OUT} by the sum of the voltage drops along the line resistances. In this case, the load regulation seen at the R_{LOAD} would be degraded from the data sheet specification. To improve this, the load should be tied directly to the output terminal on the positive side and directly tied to the ground terminal on the negative side.

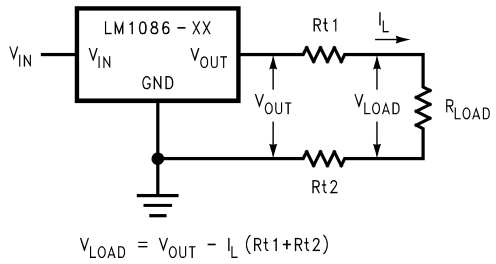

Figure 20. Typical Application using Fixed Output Regulator

When the adjustable regulator is used (Figure 21), the best performance is obtained with the positive side of the resistor R1 tied directly to the output terminal of the regulator rather than near the load. This eliminates line drops from appearing effectively in series with the reference and degrading regulation. For example, a 5V regulator with 0.05Ω resistance between the regulator and load will have a load regulation due to line resistance of 0.05Ω x I_L. If R1 (=125Ω) is connected near the load the effective line resistance will be 0.05Ω (1 + R2/R1) or in this case, it is 4 times worse. In addition, the ground side of the resistor R2 can be returned near the ground of the load to provide remote ground sensing and improve load regulation.

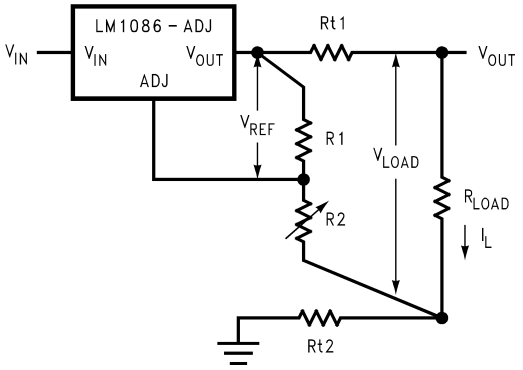

$$V_{LOAD} = V_{REF}(R1 + R2)/R1 - I_L Rt1$$

Figure 21. Best Load Regulation using Adjustable Output Regulator

PROTECTION DIODES

Under normal operation, the LM1086 regulator does not need any protection diode. With the adjustable device, the internal resistance between the adjustment and output terminals limits the current. No diode is needed to divert the current around the regulator even with a capacitor on the adjustment terminal. The adjust pin can take a transient signal of ±25V with respect to the output voltage without damaging the device.

When an output capacitor is connected to a regulator and the input is shorted, the output capacitor will discharge into the output of the regulator. The discharge current depends on the value of the capacitor, the output voltage of the regulator, and rate of decrease of V_{IN}. In the LM1086 regulator, the internal diode between the output and input pins can withstand microsecond surge currents of 10A to 20A. With an extremely large output capacitor (≥1000 µf), and with input instantaneously shorted to ground, the regulator could be damaged. In this case, an external diode is recommended between the output and input pins to protect the regulator, shown in Figure 22.

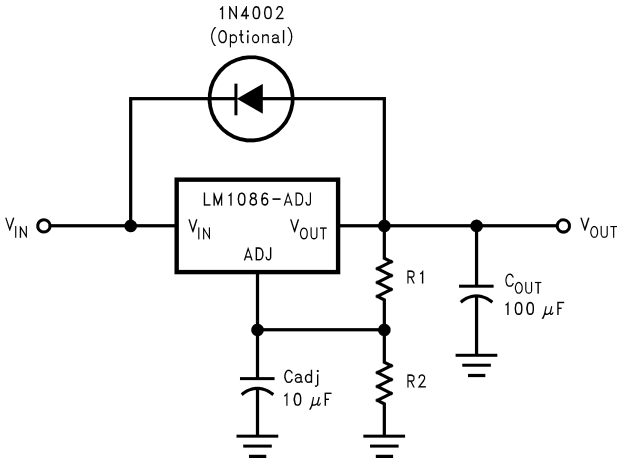

Figure 22. Regulator with Protection Diode

Copyright © 2004–2005, Texas Instruments Incorporated

OVERLOAD RECOVERY

Overload recovery refers to regulator's ability to recover from a short circuited output. A key factor in the recovery process is the current limiting used to protect the output from drawing too much power. The current limiting circuit reduces the output current as the input to output differential increases. Refer to short circuit curve in the Typical Performance Characteristics section.

During normal start-up, the input to output differential is small since the output follows the input. But, if the output is shorted, then the recovery involves a large input to output differential. Sometimes during this condition the current limiting circuit is slow in recovering. If the limited current is too low to develop a voltage at the output, the voltage will stabilize at a lower level. Under these conditions it may be necessary to recycle the power of the regulator in order to get the smaller differential voltage and thus adequate start up conditions. Refer to Typical Performance Characteristics section for the short circuit current vs. input differential voltage.

THERMAL CONSIDERATIONS

ICs heats up when in operation, and power consumption is one factor in how hot it gets. The other factor is how well the heat is dissipated. Heat dissipation is predictable by knowing the thermal resistance between the IC and ambient (θ_{JA}). Thermal resistance has units of temperature per power (C/W). The higher the thermal resistance, the hotter the IC.

The LM1086 specifies the thermal resistance for each package as junction to case (θ_{JC}). In order to get the total resistance to ambient (θ_{JA}), two other thermal resistance must be added, one for case to heat-sink (θ_{CH}) and one for heatsink to ambient (θ_{HA}). The junction temperature can be predicted as follows:

$$T_J = T_A + P_D (\theta_{JC} + \theta_{CH} + \theta_{HA}) = T_A + P_D \theta_{JA}$$

where

- T_J is junction temperature
- T_A is ambient temperature
- P_D is the power consumption of the device

Device power consumption is calculated as follows:

$$I_{IN} = I_L + I_G$$

$$P_D = (V_{IN} - V_{OUT}) I_L + V_{IN} I_G$$

Figure 23 shows the voltages and currents which are present in the circuit.

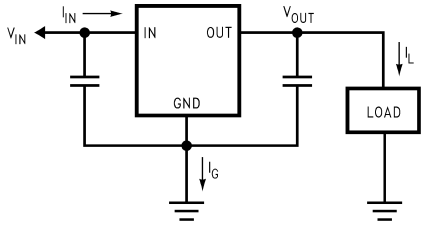

Figure 23. Power Dissipation Diagram

Once the device power is determined, the maximum allowable ($\theta_{JA(max)}$) is calculated as:

$$\theta_{JA\ (max)} = T_{R(max)}/P_D = T_{J(max)} - T_{A(max)})/P_D$$

The LM1086 has different temperature specifications for two different sections of the IC: the control section and the output section. The Electrical Characteristics table shows the junction to case thermal resistances for each of these sections, while the maximum junction temperatures ($T_{J(max)}$) for each section is listed in the Absolute Maximum section of the datasheet. $T_{J(max)}$ is 125°C for the control section, while $T_{J(max)}$ is 150°C for the output section.

$\theta_{JA\ (max)}$ should be calculated separately for each section as follows:

$$\theta_{JA}\ (\text{max, CONTROL SECTION}) = (125°\text{C for } T_{A(max)})/P_D$$

$$\theta_{JA}\ (\text{max, OUTPUT SECTION}) = (150°\text{C for } T_{A(max)})/P_D$$

The required heat sink is determined by calculating its required thermal resistance ($\theta_{HA(max)}$).

$$\theta_{HA(max)} = \theta_{JA(max)} - (\theta_{JC} + \theta_{CH})$$

$\theta_{HA\ (max)}$ should be calculated twice as follows:

$$\theta_{HA\ (max)} = \theta_{JA}(\text{max, CONTROL SECTION}) - (\theta_{JC}\ (\text{CONTROL SECTION}) + \theta_{CH})$$

$$\theta_{HA\ (max)} = \theta_{JA}(\text{max, OUTPUT SECTION}) - (\theta_{JC}(\text{OUTPUT SECTION}) + \theta_{CH})$$

If thermal compound is used, θ_{CH} can be estimated at 0.2 C/W. If the case is soldered to the heat sink, then a θ_{CH} can be estimated as 0 C/W.

After, $\theta_{HA\ (max)}$ is calculated for each section, choose the lower of the two $\theta_{HA\ (max)}$ values to determine the appropriate heat sink.

If PC board copper is going to be used as a heat sink, then Figure 24 can be used to determine the appropriate area (size) of copper foil required.

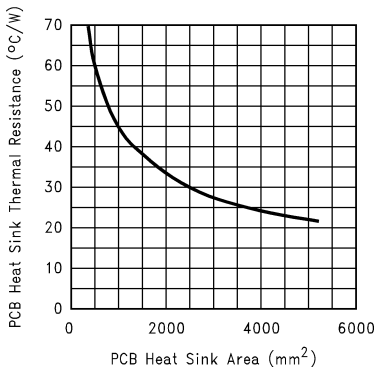

Figure 24. Heat sink thermal Resistance vs. Area

Typical Applications

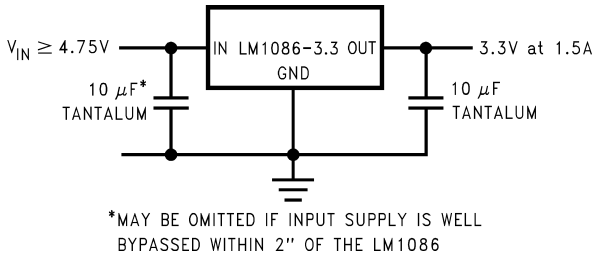

Figure 25. 5V to 3.3V, 1.5A Regulator

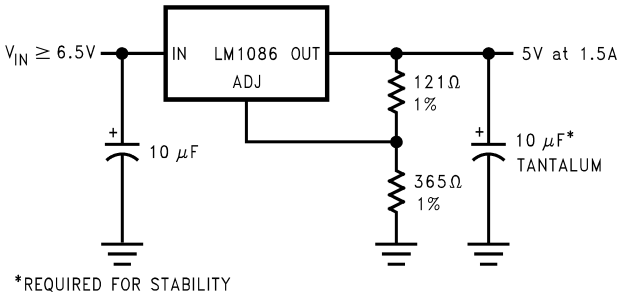

Figure 26. Adjustable @ 5V

Copyright © 2004–2005, Texas Instruments Incorporated

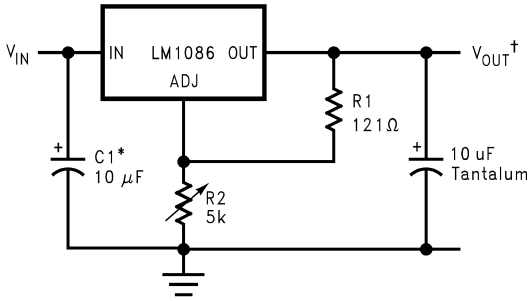

*NEEDED IF DEVICE IS FAR FROM FILTER CAPACITORS

$^{\dagger}V_{OUT} = 1.25V\left(1 + \frac{R2}{R1}\right)$

Figure 27. 1.2V to 15V Adjustable Regulator

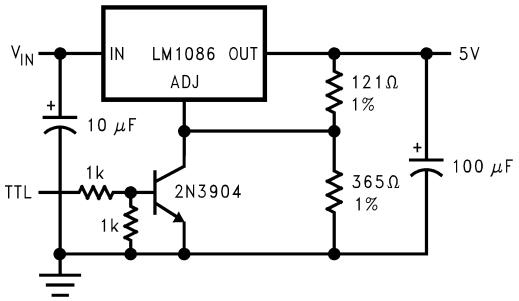

Figure 28. 5V Regulator with Shutdown

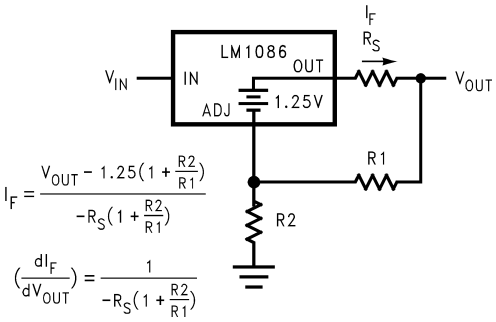

$$I_F = \frac{V_{OUT} - 1.25\left(1 + \frac{R2}{R1}\right)}{-R_S\left(1 + \frac{R2}{R1}\right)}$$

$$\left(\frac{dI_F}{dV_{OUT}}\right) = \frac{1}{-R_S\left(1 + \frac{R2}{R1}\right)}$$

Figure 29. Battery Charger

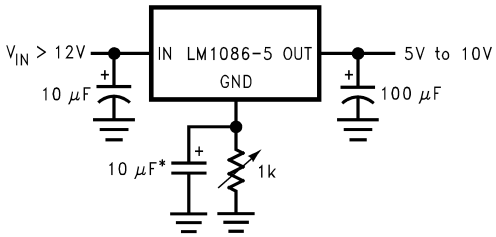

*OPTIONAL IMPROVES RIPPLE REJECTION

Figure 30. Adjustable Fixed Regulator

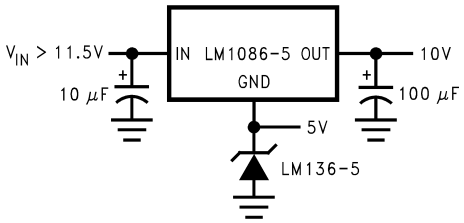

Figure 31. Regulator with Reference

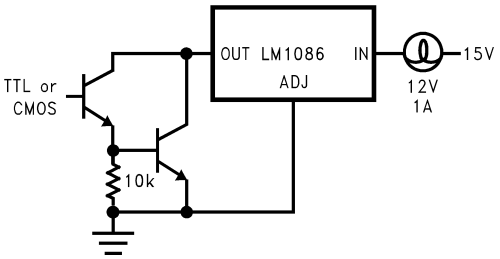

Figure 32. High Current Lamp Driver Protection

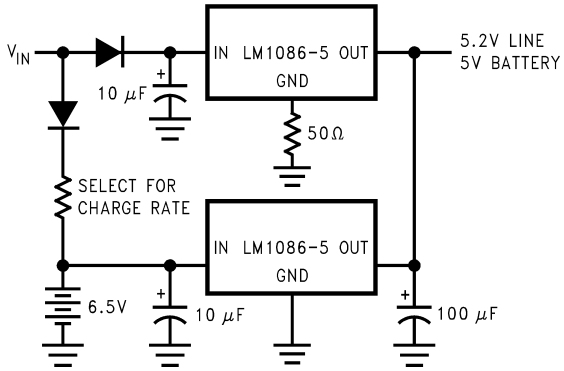

Figure 33. Battery Backup Regulated Supply

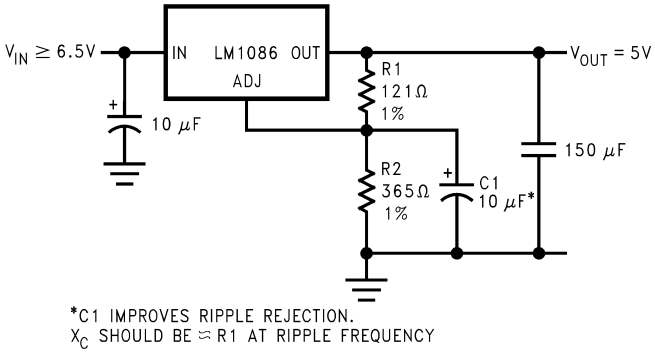

*C1 IMPROVES RIPPLE REJECTION.
X_C SHOULD BE ≈ R1 AT RIPPLE FREQUENCY

Figure 34. Ripple Rejection Enhancement

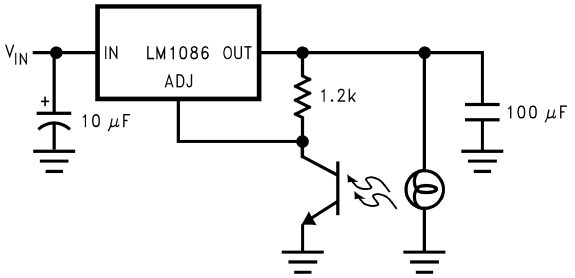

Figure 35. Automatic Light control

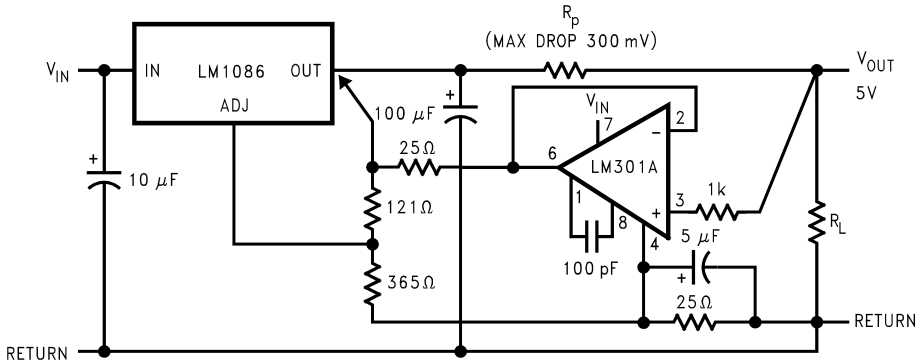

Figure 36. Remote Sensing

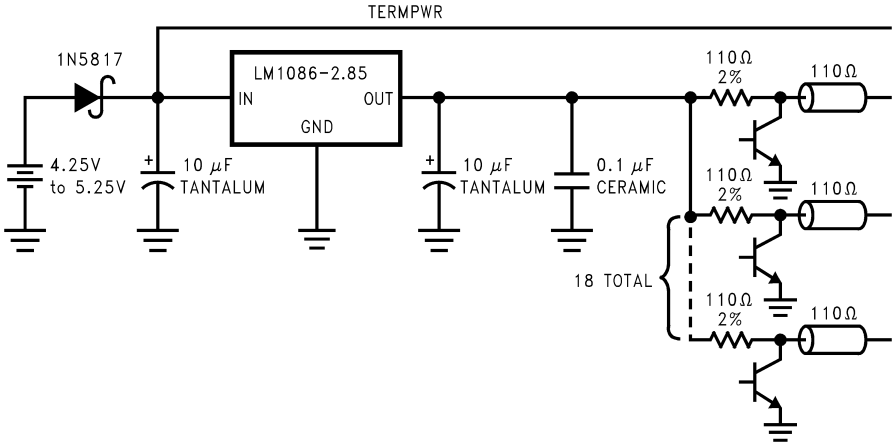

Figure 37. SCSI-2 Active termination

Copyright © 2004–2005, Texas Instruments Incorporated

PACKAGING INFORMATION

Orderable Device	Status (1)	Package Type	Package Drawing	Pins	Package Qty	Eco Plan (2)	Lead/Ball Finish	MSL Peak Temp (3)	Op Temp (°C)	Top-Side Markings (4)	Samples
LM1086CS-2.5/NOPB	ACTIVE	DDPAK/ TO-263	KTT	3	45	Pb-Free (RoHS Exempt)	CU SN	Level-3-245C-168 HR	-40 to 125	LM1086 CS-2.5	Samples
LM1086CS-3.3/NOPB	ACTIVE	DDPAK/ TO-263	KTT	3	45	Pb-Free (RoHS Exempt)	CU SN	Level-3-245C-168 HR		LM1086 CS-3.3	Samples
LM1086CS-5.0/NOPB	ACTIVE	DDPAK/ TO-263	KTT	3	45	Pb-Free (RoHS Exempt)	CU SN	Level-3-245C-168 HR	-40 to 125	LM1086 CS-5.0	Samples
LM1086CS-ADJ	ACTIVE	DDPAK/ TO-263	KTT	3	45	TBD	Call TI	Call TI		LM1086 CS-ADJ	Samples
LM1086CS-ADJ/NOPB	ACTIVE	DDPAK/ TO-263	KTT	3	45	Pb-Free (RoHS Exempt)	CU SN	Level-3-245C-168 HR		LM1086 CS-ADJ	Samples
LM1086CSX-2.5/NOPB	ACTIVE	DDPAK/ TO-263	KTT	3	500	Pb-Free (RoHS Exempt)	CU SN	Level-3-245C-168 HR	-40 to 125	LM1086 CS-2.5	Samples
LM1086CSX-3.3/NOPB	ACTIVE	DDPAK/ TO-263	KTT	3	500	Pb-Free (RoHS Exempt)	CU SN	Level-3-245C-168 HR		LM1086 CS-3.3	Samples
LM1086CSX-ADJ/NOPB	ACTIVE	DDPAK/ TO-263	KTT	3	500	Pb-Free (RoHS Exempt)	CU SN	Level-3-245C-168 HR		LM1086 CS-ADJ	Samples
LM1086CT-3.3/NOPB	ACTIVE	TO-220	NDE	3	45	Green (RoHS & no Sb/Br)	CU SN	Level-1-NA-UNLIM		LM1086 CT-3.3	Samples
LM1086CT-5.0	ACTIVE	TO-220	NDE	3	45	TBD	Call TI	Call TI	-40 to 125	LM1086 CT-5.0	Samples
LM1086CT-5.0/NOPB	ACTIVE	TO-220	NDE	3	45	Green (RoHS & no Sb/Br)	CU SN	Level-1-NA-UNLIM	-40 to 125	LM1086 CT-5.0	Samples
LM1086CT-ADJ/NOPB	ACTIVE	TO-220	NDE	3	45	Green (RoHS & no Sb/Br)	CU SN	Level-1-NA-UNLIM		LM1086 CT-ADJ	Samples
LM1086ILD-3.3	ACTIVE	WSON	NGN	8	1000	TBD	Call TI	Call TI	-40 to 125	1086I33	Samples
LM1086ILD-3.3/NOPB	ACTIVE	WSON	NGN	8	1000	Green (RoHS & no Sb/Br)	SN	Level-3-260C-168 HR	-40 to 125	1086I33	Samples
LM1086IS-1.8/NOPB	ACTIVE	DDPAK/ TO-263	KTT	3	45	Pb-Free (RoHS Exempt)	CU SN	Level-3-245C-168 HR		LM1086 IS-1.8	Samples
LM1086IS-3.3	ACTIVE	DDPAK/ TO-263	KTT	3	45	TBD	Call TI	Call TI	-40 to 125	LM1086 IS-3.3	Samples
LM1086IS-3.3/NOPB	ACTIVE	DDPAK/ TO-263	KTT	3	45	Pb-Free (RoHS Exempt)	CU SN	Level-3-245C-168 HR	-40 to 125	LM1086 IS-3.3	Samples

Orderable Device	Status (1)	Package Type	Package Drawing	Pins	Package Qty	Eco Plan (2)	Lead/Ball Finish	MSL Peak Temp (3)	Op Temp (°C)	Top-Side Markings (4)	Samples
LM1086IS-5.0/NOPB	ACTIVE	DDPAK/ TO-263	KTT	3	45	Pb-Free (RoHS Exempt)	CU SN	Level-3-245C-168 HR	-40 to 125	LM1086 IS-5.0	Samples
LM1086IS-ADJ/NOPB	ACTIVE	DDPAK/ TO-263	KTT	3	45	Pb-Free (RoHS Exempt)	CU SN	Level-3-245C-168 HR	-40 to 125	LM1086 IS-ADJ	Samples
LM1086ISX-1.8/NOPB	ACTIVE	DDPAK/ TO-263	KTT	3	500	Pb-Free (RoHS Exempt)	CU SN	Level-3-245C-168 HR		LM1086 IS-1.8	Samples
LM1086ISX-3.3/NOPB	ACTIVE	DDPAK/ TO-263	KTT	3	500	Pb-Free (RoHS Exempt)	CU SN	Level-3-245C-168 HR	-40 to 125	LM1086 IS-3.3	Samples
LM1086ISX-5.0/NOPB	ACTIVE	DDPAK/ TO-263	KTT	3	500	Pb-Free (RoHS Exempt)	CU SN	Level-3-245C-168 HR	-40 to 125	LM1086 IS-5.0	Samples
LM1086ISX-ADJ/NOPB	ACTIVE	DDPAK/ TO-263	KTT	3	500	Pb-Free (RoHS Exempt)	CU SN	Level-3-245C-168 HR	-40 to 125	LM1086 IS-ADJ	Samples
LM1086IT-3.3/NOPB	ACTIVE	TO-220	NDE	3	45	Green (RoHS & no Sb/Br)	CU SN	Level-1-NA-UNLIM	-40 to 125	LM1086 IT-3.3	Samples
LM1086IT-5.0/NOPB	ACTIVE	TO-220	NDE	3	45	Green (RoHS & no Sb/Br)	CU SN	Level-1-NA-UNLIM	-40 to 125	LM1086 IT-5.0	Samples
LM1086IT-ADJ/NOPB	ACTIVE	TO-220	NDE	3	45	Green (RoHS & no Sb/Br)	CU SN	Level-1-NA-UNLIM	-40 to 125	LM1086 IT-ADJ	Samples

(1) The marketing status values are defined as follows:
ACTIVE: Product device recommended for new designs.
LIFEBUY: TI has announced that the device will be discontinued, and a lifetime-buy period is in effect.
NRND: Not recommended for new designs. Device is in production to support existing customers, but TI does not recommend using this part in a new design.
PREVIEW: Device has been announced but is not in production. Samples may or may not be available.
OBSOLETE: TI has discontinued the production of the device.

(2) Eco Plan - The planned eco-friendly classification: Pb-Free (RoHS), Pb-Free (RoHS Exempt), or Green (RoHS & no Sb/Br) - please check http://www.ti.com/productcontent for the latest availability information and additional product content details.
TBD: The Pb-Free/Green conversion plan has not been defined.
Pb-Free (RoHS): TI's terms "Lead-Free" or "Pb-Free" mean semiconductor products that are compatible with the current RoHS requirements for all 6 substances, including the requirement that lead not exceed 0.1% by weight in homogeneous materials. Where designed to be soldered at high temperatures, TI Pb-Free products are suitable for use in specified lead-free processes.
Pb-Free (RoHS Exempt): This component has a RoHS exemption for either 1) lead-based flip-chip solder bumps used between the die and package, or 2) lead-based die adhesive used between the die and leadframe. The component is otherwise considered Pb-Free (RoHS compatible) as defined above.
Green (RoHS & no Sb/Br): TI defines "Green" to mean Pb-Free (RoHS compatible), and free of Bromine (Br) and Antimony (Sb) based flame retardants (Br or Sb do not exceed 0.1% by weight in homogeneous material)

(3) MSL, Peak Temp. -- The Moisture Sensitivity Level rating according to the JEDEC industry standard classifications, and peak solder temperature.

(4) Multiple Top-Side Markings will be inside parentheses. Only one Top-Side Marking contained in parentheses and separated by a "~" will appear on a device. If a line is indented then it is a continuation of the previous line and the two combined represent the entire Top-Side Marking for that device.

Important Information and Disclaimer: The information provided on this page represents TI's knowledge and belief as of the date that it is provided. TI bases its knowledge and belief on information provided by third parties, and makes no representation or warranty as to the accuracy of such information. Efforts are underway to better integrate information from third parties. TI has taken and continues to take reasonable steps to provide representative and accurate information but may not have conducted destructive testing or chemical analysis on incoming materials and chemicals. TI and TI suppliers consider certain information to be proprietary, and thus CAS numbers and other limited information may not be available for release.

In no event shall TI's liability arising out of such information exceed the total purchase price of the TI part(s) at issue in this document sold by TI to Customer on an annual basis.

TAPE AND REEL INFORMATION

REEL DIMENSIONS

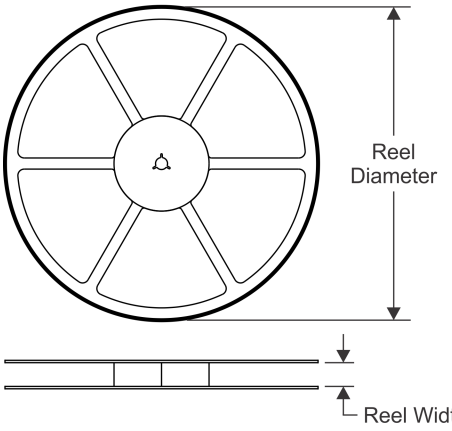

TAPE DIMENSIONS

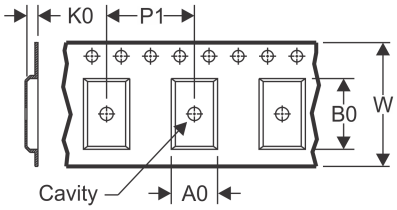

A0	Dimension designed to accommodate the component width
B0	Dimension designed to accommodate the component length
K0	Dimension designed to accommodate the component thickness
W	Overall width of the carrier tape
P1	Pitch between successive cavity centers

QUADRANT ASSIGNMENTS FOR PIN 1 ORIENTATION IN TAPE

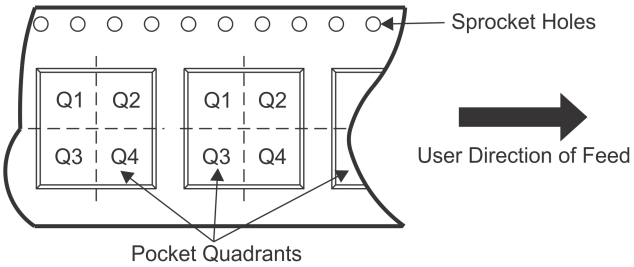

*All dimensions are nominal

Device	Package Type	Package Drawing	Pins	SPQ	Reel Diameter (mm)	Reel Width W1 (mm)	A0 (mm)	B0 (mm)	K0 (mm)	P1 (mm)	W (mm)	Pin1 Quadrant
LM1086CSX-2.5/NOPB	DDPAK/ TO-263	KTT	3	500	330.0	24.4	10.75	14.85	5.0	16.0	24.0	Q2
LM1086CSX-3.3/NOPB	DDPAK/ TO-263	KTT	3	500	330.0	24.4	10.75	14.85	5.0	16.0	24.0	Q2
LM1086CSX-ADJ/NOPB	DDPAK/ TO-263	KTT	3	500	330.0	24.4	10.75	14.85	5.0	16.0	24.0	Q2
LM1086ILD-3.3	WSON	NGN	8	1000	178.0	12.4	4.3	4.3	1.3	8.0	12.0	Q1
LM1086ILD-3.3/NOPB	WSON	NGN	8	1000	178.0	12.4	4.3	4.3	1.3	8.0	12.0	Q1
LM1086ISX-1.8/NOPB	DDPAK/ TO-263	KTT	3	500	330.0	24.4	10.75	14.85	5.0	16.0	24.0	Q2
LM1086ISX-3.3/NOPB	DDPAK/ TO-263	KTT	3	500	330.0	24.4	10.75	14.85	5.0	16.0	24.0	Q2
LM1086ISX-5.0/NOPB	DDPAK/ TO-263	KTT	3	500	330.0	24.4	10.75	14.85	5.0	16.0	24.0	Q2
LM1086ISX-ADJ/NOPB	DDPAK/ TO-263	KTT	3	500	330.0	24.4	10.75	14.85	5.0	16.0	24.0	Q2

TAPE AND REEL BOX DIMENSIONS

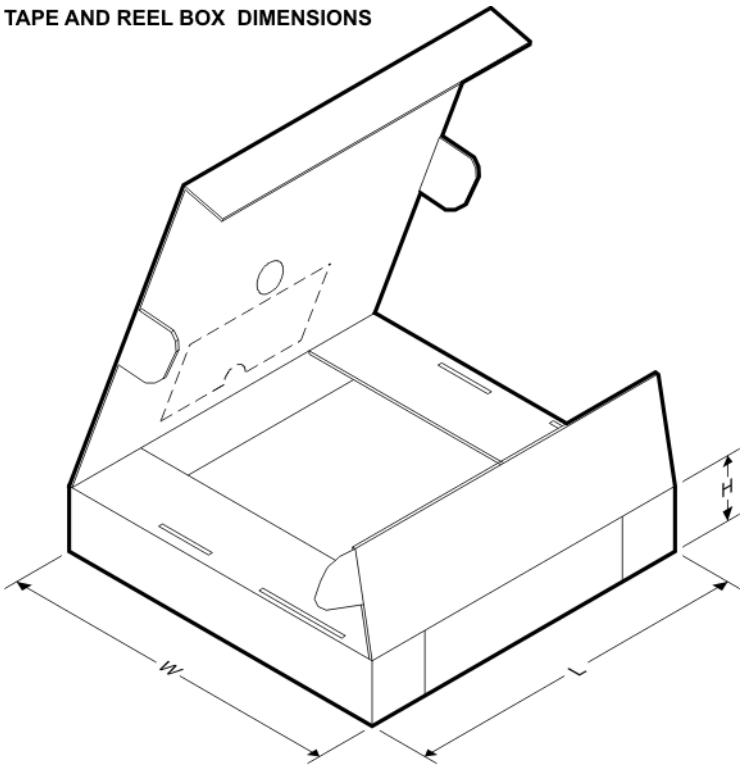

*All dimensions are nominal

Device	Package Type	Package Drawing	Pins	SPQ	Length (mm)	Width (mm)	Height (mm)
LM1086CSX-2.5/NOPB	DDPAK/TO-263	KTT	3	500	367.0	367.0	45.0
LM1086CSX-3.3/NOPB	DDPAK/TO-263	KTT	3	500	367.0	367.0	45.0
LM1086CSX-ADJ/NOPB	DDPAK/TO-263	KTT	3	500	367.0	367.0	45.0
LM1086ILD-3.3	WSON	NGN	8	1000	210.0	185.0	35.0
LM1086ILD-3.3/NOPB	WSON	NGN	8	1000	213.0	191.0	55.0
LM1086ISX-1.8/NOPB	DDPAK/TO-263	KTT	3	500	367.0	367.0	45.0
LM1086ISX-3.3/NOPB	DDPAK/TO-263	KTT	3	500	367.0	367.0	45.0
LM1086ISX-5.0/NOPB	DDPAK/TO-263	KTT	3	500	367.0	367.0	45.0
LM1086ISX-ADJ/NOPB	DDPAK/TO-263	KTT	3	500	367.0	367.0	45.0

NDE0003B

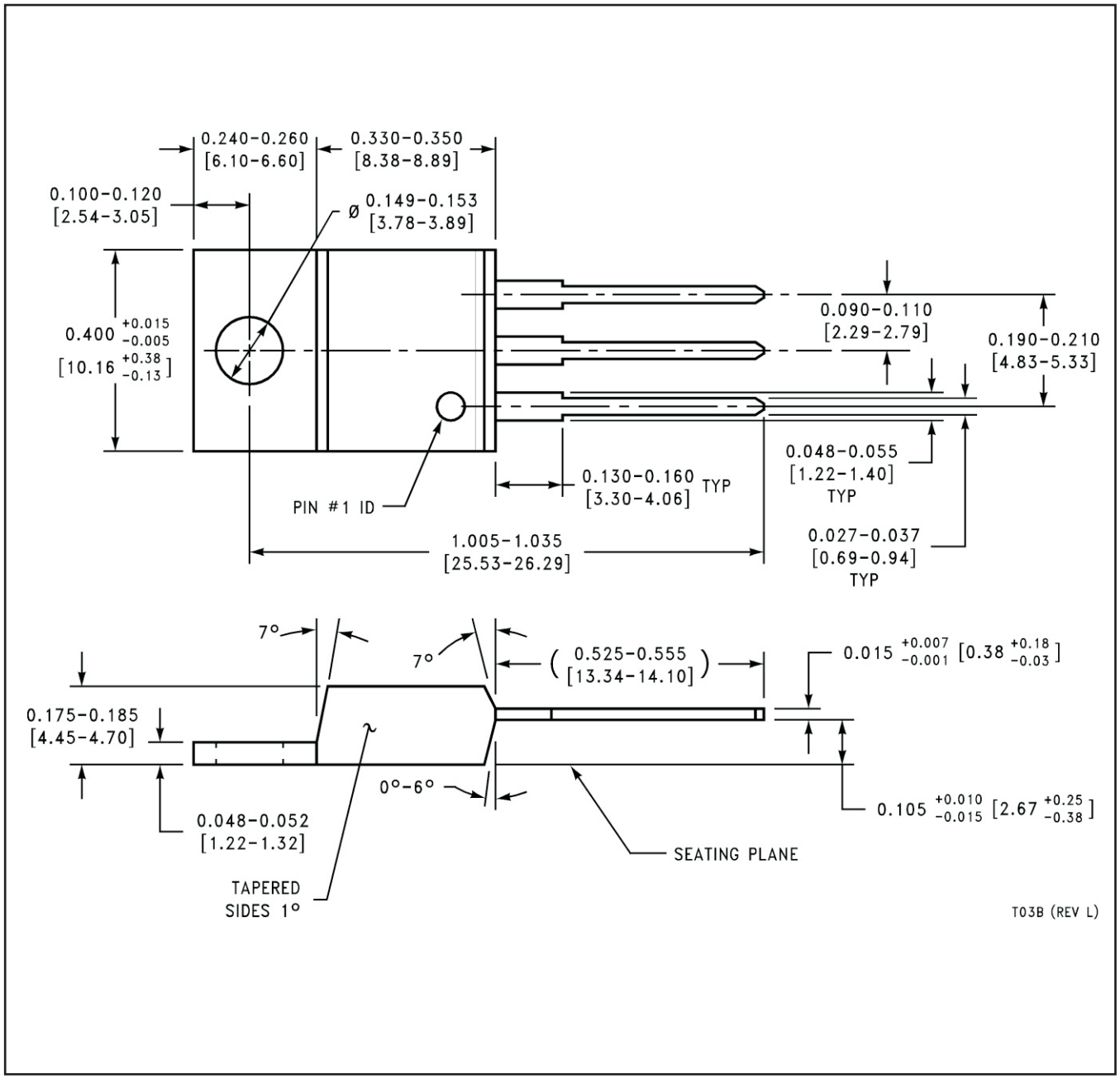
0.240-0.260
[6.10-6.60]
0.330-0.350
[8.38-8.89]
0.100-0.120
[2.54-3.05]
Ø 0.149-0.153
[3.78-3.89]
0.400 +0.015 -0.005
[10.16 +0.38 -0.13]
0.090-0.110
[2.29-2.79]
0.190-0.210
[4.83-5.33]
0.048-0.055
[1.22-1.40]
TYP
0.130-0.160 TYP
[3.30-4.06]
PIN #1 ID
1.005-1.035
[25.53-26.29]
0.027-0.037
[0.69-0.94]
TYP
7°
7°
(0.525-0.555)
[13.34-14.10]
0.015 +0.007 -0.001 [0.38 +0.18 -0.03]
0.175-0.185
[4.45-4.70]
0°-6°
0.105 +0.010 -0.015 [2.67 +0.25 -0.38]
0.048-0.052
[1.22-1.32]
SEATING PLANE
TAPERED
SIDES 1°
T03B (REV L)

NGN0008A

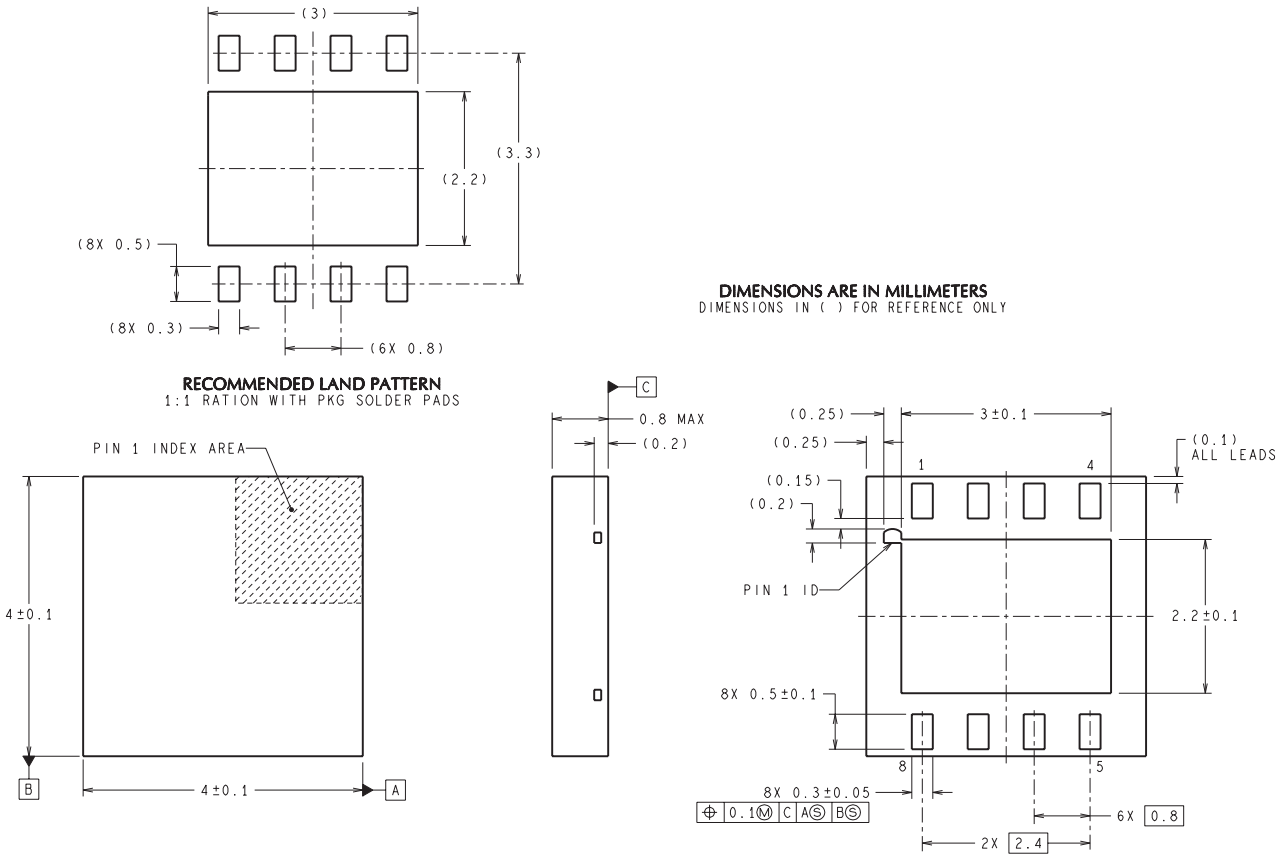

LDC08A (Rev B)

KTT0003B

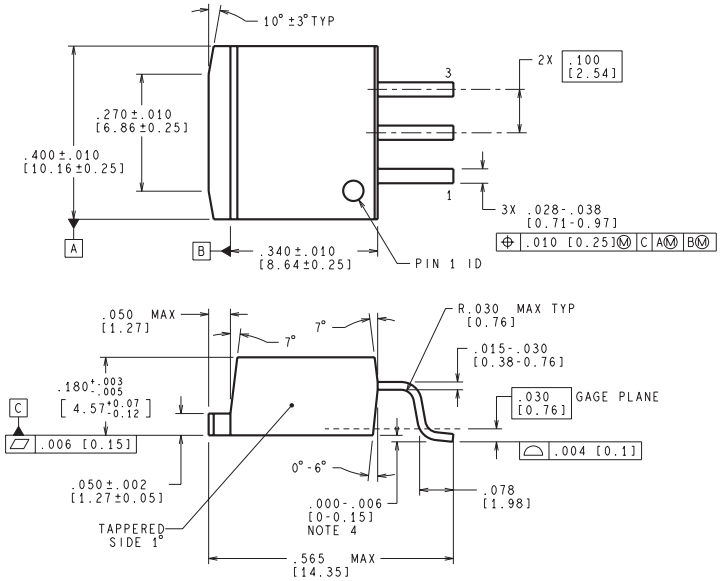

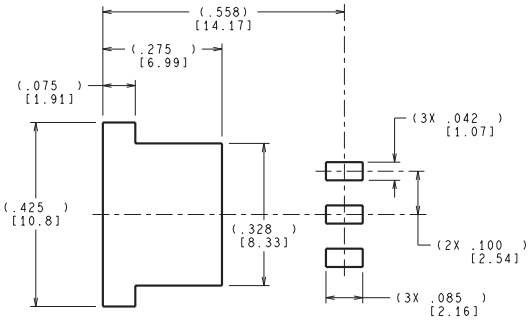

LAND PATTERN RECOMMENDATION

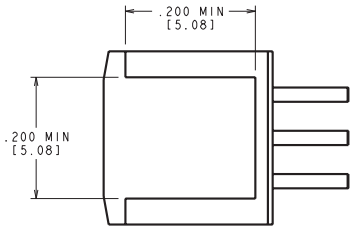

BOTTOM SIDE OF PACKAGE

CONTROLLING DIMENSION IS INCH
VALUES IN [ ] ARE MILLIMETERS
DIMENSIONS IN ( ) FOR REFERENCE ONLY

TS3B (Rev F)

IMPORTANT NOTICE

Texas Instruments Incorporated and its subsidiaries (TI) reserve the right to make corrections, enhancements, improvements and other changes to its semiconductor products and services per JESD46, latest issue, and to discontinue any product or service per JESD48, latest issue. Buyers should obtain the latest relevant information before placing orders and should verify that such information is current and complete. All semiconductor products (also referred to herein as “components”) are sold subject to TI’s terms and conditions of sale supplied at the time of order acknowledgment.

TI warrants performance of its components to the specifications applicable at the time of sale, in accordance with the warranty in TI’s terms and conditions of sale of semiconductor products. Testing and other quality control techniques are used to the extent TI deems necessary to support this warranty. Except where mandated by applicable law, testing of all parameters of each component is not necessarily performed.

TI assumes no liability for applications assistance or the design of Buyers’ products. Buyers are responsible for their products and applications using TI components. To minimize the risks associated with Buyers’ products and applications, Buyers should provide adequate design and operating safeguards.

TI does not warrant or represent that any license, either express or implied, is granted under any patent right, copyright, mask work right, or other intellectual property right relating to any combination, machine, or process in which TI components or services are used. Information published by TI regarding third-party products or services does not constitute a license to use such products or services or a warranty or endorsement thereof. Use of such information may require a license from a third party under the patents or other intellectual property of the third party, or a license from TI under the patents or other intellectual property of TI.

Reproduction of significant portions of TI information in TI data books or data sheets is permissible only if reproduction is without alteration and is accompanied by all associated warranties, conditions, limitations, and notices. TI is not responsible or liable for such altered documentation. Information of third parties may be subject to additional restrictions.

Resale of TI components or services with statements different from or beyond the parameters stated by TI for that component or service voids all express and any implied warranties for the associated TI component or service and is an unfair and deceptive business practice. TI is not responsible or liable for any such statements.

Buyer acknowledges and agrees that it is solely responsible for compliance with all legal, regulatory and safety-related requirements concerning its products, and any use of TI components in its applications, notwithstanding any applications-related information or support that may be provided by TI. Buyer represents and agrees that it has all the necessary expertise to create and implement safeguards which anticipate dangerous consequences of failures, monitor failures and their consequences, lessen the likelihood of failures that might cause harm and take appropriate remedial actions. Buyer will fully indemnify TI and its representatives against any damages arising out of the use of any TI components in safety-critical applications.

In some cases, TI components may be promoted specifically to facilitate safety-related applications. With such components, TI’s goal is to help enable customers to design and create their own end-product solutions that meet applicable functional safety standards and requirements. Nonetheless, such components are subject to these terms.

No TI components are authorized for use in FDA Class III (or similar life-critical medical equipment) unless authorized officers of the parties have executed a special agreement specifically governing such use.

Only those TI components which TI has specifically designated as military grade or “enhanced plastic” are designed and intended for use in military/aerospace applications or environments. Buyer acknowledges and agrees that any military or aerospace use of TI components which have ***not*** been so designated is solely at the Buyer's risk, and that Buyer is solely responsible for compliance with all legal and regulatory requirements in connection with such use.

TI has specifically designated certain components as meeting ISO/TS16949 requirements, mainly for automotive use. In any case of use of non-designated products, TI will not be responsible for any failure to meet ISO/TS16949.

Products		**Applications**	
Audio	www.ti.com/audio	Automotive and Transportation	www.ti.com/automotive
Amplifiers	amplifier.ti.com	Communications and Telecom	www.ti.com/communications
Data Converters	dataconverter.ti.com	Computers and Peripherals	www.ti.com/computers
DLP® Products	www.dlp.com	Consumer Electronics	www.ti.com/consumer-apps
DSP	dsp.ti.com	Energy and Lighting	www.ti.com/energy
Clocks and Timers	www.ti.com/clocks	Industrial	www.ti.com/industrial
Interface	interface.ti.com	Medical	www.ti.com/medical
Logic	logic.ti.com	Security	www.ti.com/security
Power Mgmt	power.ti.com	Space, Avionics and Defense	www.ti.com/space-avionics-defense
Microcontrollers	microcontroller.ti.com	Video and Imaging	www.ti.com/video
RFID	www.ti-rfid.com		
OMAP Applications Processors	www.ti.com/omap	**TI E2E Community**	e2e.ti.com
Wireless Connectivity	www.ti.com/wirelessconnectivity		

Mailing Address: Texas Instruments, Post Office Box 655303, Dallas, Texas 75265
Copyright © 2013, Texas Instruments Incorporated