LM1117-N/LM1117I 800mA Low-Dropout Linear Regulator

Check for Samples: LM1117-N, LM1117I

FEATURES

- **Available in 1.8V, 2.5V, 2.85V, 3.3V, 5V, and Adjustable Versions**
- **Space Saving SOT-223 and WSON Packages**
- **Current Limiting and Thermal Protection**
- **Output Current 800mA**
- **Line Regulation 0.2% (Max)**
- **Load Regulation 0.4% (Max)**
- **Temperature Range**
  - **LM1117-N: 0°C to 125°C**
  - **LM1117I: −40°C to 125°C**

APPLICATIONS

- **2.85V Model for SCSI-2 Active Termination**
- **Post Regulator for Switching DC/DC Converter**
- **High Efficiency Linear Regulators**
- **Battery Charger**
- **Battery Powered Instrumentation**

DESCRIPTION

The LM1117-N is a series of low dropout voltage regulators with a dropout of 1.2V at 800mA of load current. It has the same pin-out as Texas Instruments' industry standard LM317.

The LM1117-N is available in an adjustable version, which can set the output voltage from 1.25V to 13.8V with only two external resistors. In addition, it is also available in five fixed voltages, 1.8V, 2.5V, 2.85V, 3.3V, and 5V.

The LM1117-N offers current limiting and thermal shutdown. Its circuit includes a zener trimmed bandgap reference to assure output voltage accuracy to within ±1%.

The LM1117-N series is available in WSON, PFM, SOT-223, TO-220, and TO-263 DDPAK packages. A minimum of 10µF tantalum capacitor is required at the output to improve the transient response and stability.

TYPICAL APPLICATION

Active Terminator for SCSI-2 Bus

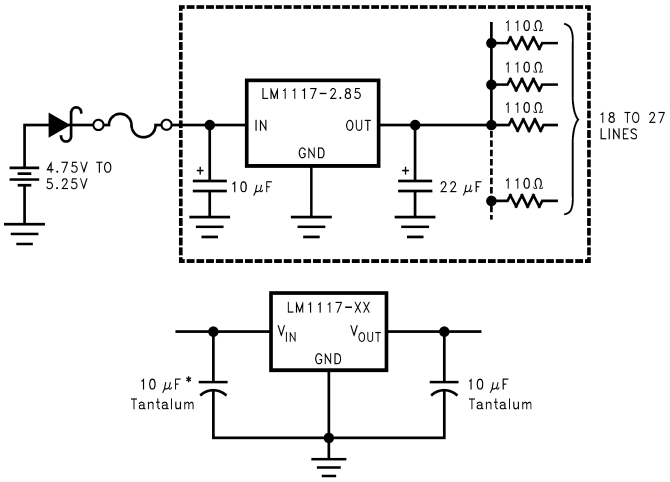

*Required if the regulator is located far from the power supply filter.

Figure 1. Fixed Output Regulator

Please be aware that an important notice concerning availability, standard warranty, and use in critical applications of Texas Instruments semiconductor products and disclaimers thereto appears at the end of this data sheet.

All trademarks are the property of their respective owners.

PRODUCTION DATA information is current as of publication date. Products conform to specifications per the terms of the Texas Instruments standard warranty. Production processing does not necessarily include testing of all parameters.

Copyright © 2000–2013, Texas Instruments Incorporated

Block Diagram

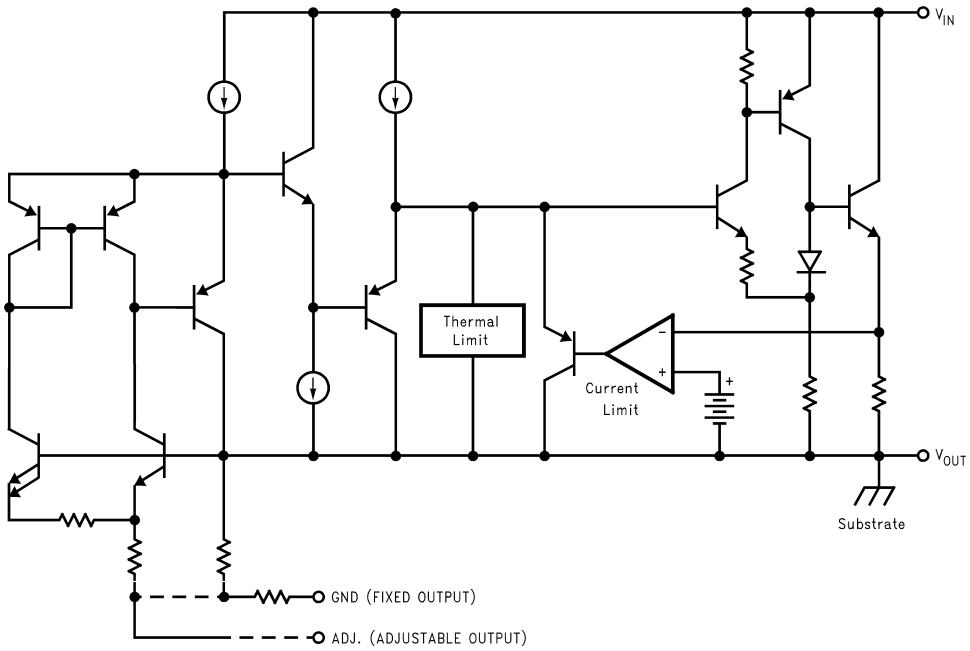

Connection Diagrams

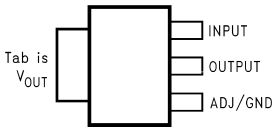

Figure 2. SOT-223 Top View

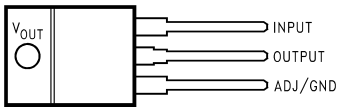

Figure 3. TO-220 Top View

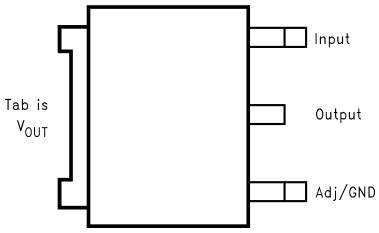

Figure 4. PFM Top View

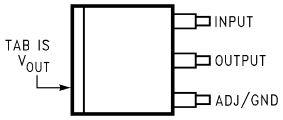

Figure 5. DDPAK/TO-263 Top View

Copyright © 2000–2013, Texas Instruments Incorporated

Figure 6. DDPAK/TO-263 Side View

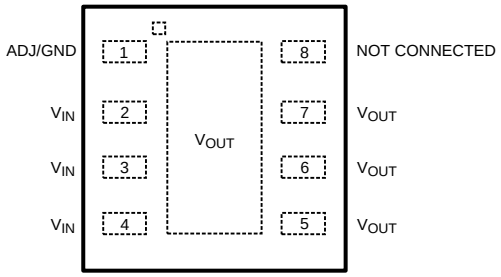

When using the WSON package
Pins 2, 3 & 4 must be connected together and
Pins 5, 6 & 7 must be connected together

Figure 7. WSON Top View

These devices have limited built-in ESD protection. The leads should be shorted together or the device placed in conductive foam during storage or handling to prevent electrostatic damage to the MOS gates.

ABSOLUTE MAXIMUM RATINGS[(1)(2)]

Maximum Input Voltage (V_{IN} to GND)		20V
Power Dissipation[(3)]		Internally Limited
Junction Temperature (T_J)[(3)]		150°C
Storage Temperature Range		-65°C to 150°C
Lead Temperature	TO-220 (T) Package	260°C, 10 sec
	SOT-223 (IMP) Package	260°C, 4 sec
ESD Tolerance[(4)]		2000V

(1) Absolute Maximum Ratings indicate limits beyond which damage to the device may occur. Operating Ratings indicate conditions for which the device is intended to be functional, but specific performance is not ensured. For ensured specifications and the test conditions, see the Electrical Characteristics.
(2) If Military/Aerospace specified devices are required, please contact the Texas Instruments Sales Office/Distributors for availability and specifications.
(3) The maximum power dissipation is a function of $T_{J(max)}$, θ_{JA}, and T_A. The maximum allowable power dissipation at any ambient temperature is $P_D = (T_{J(max)} – T_A)/\theta_{JA}$. All numbers apply for packages soldered directly into a PC board.
(4) For testing purposes, ESD was applied using human body model, 1.5kΩ in series with 100pF.

OPERATING RATINGS[(1)]

Input Voltage (V_{IN} to GND)		15V
Junction Temperature Range (T_J)[(2)]	LM1117-N	0°C to 125°C
	LM1117I	−40°C to 125°C

(1) Absolute Maximum Ratings indicate limits beyond which damage to the device may occur. Operating Ratings indicate conditions for which the device is intended to be functional, but specific performance is not ensured. For ensured specifications and the test conditions, see the Electrical Characteristics.
(2) The maximum power dissipation is a function of $T_{J(max)}$, θ_{JA}, and T_A. The maximum allowable power dissipation at any ambient temperature is $P_D = (T_{J(max)} – T_A)/\theta_{JA}$. All numbers apply for packages soldered directly into a PC board.

Copyright © 2000–2013, Texas Instruments Incorporated

LM1117-N ELECTRICAL CHARACTERISTICS

Typicals and limits appearing in normal type apply for T_J = 25°C. Limits appearing in **Boldface** type apply over the entire junction temperature range for operation, 0°C to 125°C.

Symbol	Parameter	Conditions	Min(1)	Typ(2)	Max(1)	Units
V_{REF}	Reference Voltage	LM1117-N-ADJ I_{OUT} = 10mA, V_{IN}-V_{OUT} = 2V, T_J = 25°C 10mA ≤ I_{OUT} ≤ 800mA, 1.4V ≤ V_{IN}-V_{OUT} ≤ 10V	1.238 **1.225**	1.250 1.250	1.262 **1.270**	V V
V_{OUT}	Output Voltage	LM1117-N-1.8 I_{OUT} = 10mA, V_{IN} = 3.8V, T_J = 25°C 0 ≤ I_{OUT} ≤ 800mA, 3.2V ≤ V_{IN} ≤ 10V	1.782 **1.746**	1.800 1.800	1.818 **1.854**	V V
		LM1117-N-2.5 I_{OUT} = 10mA, V_{IN} = 4.5V, T_J = 25°C 0 ≤ I_{OUT} ≤ 800mA, 3.9V ≤ V_{IN} ≤ 10V	2.475 **2.450**	2.500 2.500	2.525 **2.550**	V V
		LM1117-N-2.85 I_{OUT} = 10mA, V_{IN} = 4.85V, T_J = 25°C 0 ≤ I_{OUT} ≤ 800mA, 4.25V ≤ V_{IN} ≤ 10V 0 ≤ I_{OUT} ≤ 500mA, V_{IN} = 4.10V	2.820 **2.790** **2.790**	2.850 2.850 2.850	2.880 **2.910** **2.910**	V V V
		LM1117-N-3.3 I_{OUT} = 10mA, V_{IN} = 5V T_J = 25°C 0 ≤ I_{OUT} ≤ 800mA, 4.75V≤ V_{IN} ≤ 10V	3.267 **3.235**	3.300 3.300	3.333 **3.365**	V V
		LM1117-N-5.0 I_{OUT} = 10mA, V_{IN} = 7V, T_J = 25°C 0 ≤ I_{OUT} ≤ 800mA, 6.5V ≤ V_{IN} ≤ 12V	4.950 **4.900**	5.000 5.000	5.050 **5.100**	V V
ΔV_{OUT}	Line Regulation(3)	LM1117-N-ADJ I_{OUT} = 10mA, 1.5V ≤ V_{IN}-V_{OUT} ≤ 13.75V		0.035	**0.2**	%
		LM1117-N-1.8 I_{OUT} = 0mA, 3.2V ≤ V_{IN} ≤ 10V		1	**6**	mV
		LM1117-N-2.5 I_{OUT} = 0mA, 3.9V ≤ V_{IN} ≤ 10V		1	**6**	mV
		LM1117-N-2.85 I_{OUT} = 0mA, 4.25V ≤ V_{IN} ≤ 10V		1	**6**	mV
		LM1117-N-3.3 I_{OUT} = 0mA, 4.75V ≤ V_{IN} ≤ 15V		1	**6**	mV
		LM1117-N-5.0 I_{OUT} = 0mA, 6.5V ≤ V_{IN} ≤ 15V		1	**10**	mV
ΔV_{OUT}	Load Regulation(3)	LM1117-N-ADJ V_{IN}-V_{OUT} = 3V, 10 ≤ I_{OUT} ≤ 800mA		0.2	**0.4**	%
		LM1117-N-1.8 V_{IN} = 3.2V, 0 ≤ I_{OUT} ≤ 800mA		1	**10**	mV
		LM1117-N-2.5 V_{IN} = 3.9V, 0 ≤ I_{OUT} ≤ 800mA		1	**10**	mV
		LM1117-N-2.85 V_{IN} = 4.25V, 0 ≤ I_{OUT} ≤ 800mA		1	**10**	mV
		LM1117-N-3.3 V_{IN} = 4.75V, 0 ≤ I_{OUT} ≤ 800mA		1	**10**	mV
		LM1117-N-5.0 V_{IN} = 6.5V, 0 ≤ I_{OUT} ≤ 800mA		1	**15**	mV
V_{IN}-V_{OUT}	Dropout Voltage(4)	I_{OUT} = 100mA		1.10	**1.20**	V
		I_{OUT} = 500mA		1.15	**1.25**	V
		I_{OUT} = 800mA		1.20	**1.30**	V

(1) All limits are ensured by testing or statistical analysis.
(2) Typical Values represent the most likely parametric normal.
(3) Load and line regulation are measured at constant junction room temperature.
(4) The dropout voltage is the input/output differential at which the circuit ceases to regulate against further reduction in input voltage. It is measured when the output voltage has dropped 100mV from the nominal value obtained at V_{IN} = V_{OUT} +1.5V.

Copyright © 2000–2013, Texas Instruments Incorporated

LM1117-N ELECTRICAL CHARACTERISTICS (continued)

Typicals and limits appearing in normal type apply for T_J = 25°C. Limits appearing in **Boldface** type apply over the entire junction temperature range for operation, 0°C to 125°C.

Symbol	Parameter	Conditions	Min(1)	Typ(2)	Max(1)	Units
I_{LIMIT}	Current Limit	V_{IN}-V_{OUT} = 5V, T_J = 25°C	800	1200	1500	mA
	Minimum Load Current(5)	LM1117-N-ADJ V_{IN} = 15V		1.7	**5**	mA
	Quiescent Current	LM1117-N-1.8 V_{IN} ≤ 15V		5	**10**	mA
		LM1117-N-2.5 V_{IN} ≤ 15V		5	**10**	mA
		LM1117-N-2.85 V_{IN} ≤ 10V		5	**10**	mA
		LM1117-N-3.3 V_{IN} ≤ 15V		5	**10**	mA
		LM1117-N-5.0 V_{IN} ≤ 15V		5	**10**	mA
	Thermal Regulation	T_A = 25°C, 30ms Pulse		0.01	0.1	%/W
	Ripple Regulation	f_{RIPPLE} =1 20Hz, V_{IN}-V_{OUT} = 3V V_{RIPPLE} = 1V_{PP}	**60**	75		dB
	Adjust Pin Current			60	**120**	µA
	Adjust Pin Current Change	10 ≤ I_{OUT}≤ 800mA, 1.4V ≤ V_{IN}-V_{OUT} ≤ 10V		0.2	**5**	µA
	Temperature Stability			0.5		%
	Long Term Stability	T_A = 125°C, 1000Hrs		0.3		%
	RMS Output Noise	(% of V_{OUT}), 10Hz ≤ f ≤10kHz		0.003		%
	Thermal Resistance Junction-to-Case	3-Lead SOT-223		15.0		°C/W
		3-Lead TO-220		3.0		°C/W
		3-Lead TO-263		10		°C/W
	Thermal Resistance Junction-to-Ambient (No air flow)	3-Lead SOT-223 (No heat sink)		136		°C/W
		3-Lead TO-220 (No heat sink)		79		°C/W
		3-Lead TO-263(6) (No heat sink)		92		°C/W
		3-Lead PFM		55		°C/W
		8-Lead WSON(7)		40		°C/W

(5) The minimum output current required to maintain regulation.
(6) Minimum pad size of 0.038in^2
(7) Thermal Performance for the WSON was obtained using JESD51-7 board with six vias and an ambient temperature of 22°C. For information about improved thermal performance and power dissipation for the WSON, refer to Application Note AN-1187 (SNOA401).

LM1117I ELECTRICAL CHARACTERISTICS

Typicals and limits appearing in normal type apply for T_J = 25°C. Limits appearing in **Boldface** type apply over the entire junction temperature range for operation, −40°C to 125°C.

Symbol	Parameter	Conditions	Min(1)	Typ(2)	Max(1)	Units
V_{REF}	Reference Voltage	LM1117I-ADJ I_{OUT} = 10mA, V_{IN}-V_{OUT} = 2V, T_J = 25°C 10mA ≤ I_{OUT} ≤ 800mA, 1.4V ≤ V_{IN}-V_{OUT} ≤ 10V	1.238 **1.200**	1.250 1.250	1.262 **1.290**	V V
V_{OUT}	Output Voltage	LM1117I-3.3 I_{OUT} = 10mA, V_{IN} = 5V, T_J = 25°C 0 ≤ I_{OUT} ≤ 800mA, 4.75V ≤ V_{IN} ≤ 10V	3.267 **3.168**	3.300 3.300	3.333 **3.432**	V V
		LM1117I-5.0 I_{OUT} = 10mA, V_{IN} = 7V, T_J = 25°C 0 ≤ I_{OUT} ≤ 800mA, 6.5V ≤ V_{IN} ≤ 12V	4.950 **4.800**	5.000 5.000	5.050 **5.200**	V V

(1) All limits are ensured by testing or statistical analysis.
(2) Typical Values represent the most likely parametric normal.

Copyright © 2000–2013, Texas Instruments Incorporated

LM1117I ELECTRICAL CHARACTERISTICS (continued)

Typicals and limits appearing in normal type apply for T_J = 25°C. Limits appearing in **Boldface** type apply over the entire junction temperature range for operation, −40°C to 125°C.

Symbol	Parameter	Conditions	Min(1)	Typ(2)	Max(1)	Units
ΔV_{OUT}	Line Regulation(3)	LM1117I-ADJ I_{OUT} = 10mA, 1.5V ≤ V_{IN}-V_{OUT} ≤ 13.75V		0.035	**0.3**	%
		LM1117I-3.3 I_{OUT} = 0mA, 4.75V ≤ V_{IN} ≤ 15V		1	**10**	mV
		LM1117I-5.0 I_{OUT} = 0mA, 6.5V ≤ V_{IN} ≤ 15V		1	**15**	mV
ΔV_{OUT}	Load Regulation(3)	LM1117I-ADJ V_{IN}-V_{OUT} = 3V, 10 ≤ I_{OUT} ≤ 800mA		0.2	**0.5**	%
		LM1117I-3.3 V_{IN} = 4.75V, 0 ≤ I_{OUT} ≤ 800mA		1	**15**	mV
		LM1117I-5.0 V_{IN} = 6.5V, 0 ≤ I_{OUT} ≤ 800mA		1	**20**	mV
V_{IN}-V_{OUT}	Dropout Voltage(4)	I_{OUT} = 100mA		1.10	**1.30**	V
		I_{OUT} = 500mA		1.15	**1.35**	V
		I_{OUT} = 800mA		1.20	**1.40**	V
I_{LIMIT}	Current Limit	V_{IN}-V_{OUT} = 5V, T_J = 25°C	800	1200	1500	mA
	Minimum Load Current(5)	LM1117I-ADJ V_{IN} = 15V		1.7	**5**	mA
	Quiescent Current	LM1117I-3.3 V_{IN} ≤ 15V		5	**15**	mA
		LM1117I-5.0 V_{IN} ≤ 15V		5	**15**	mA
	Thermal Regulation	T_A = 25°C, 30ms Pulse		0.01	0.1	%/W
	Ripple Regulation	f_{RIPPLE} =1 20Hz, V_{IN}-V_{OUT} = 3V V_{RIPPLE} = $1V_{PP}$	**60**	75		dB
	Adjust Pin Current			60	**120**	µA
	Adjust Pin Current Change	10 ≤ I_{OUT}≤ 800mA, 1.4V ≤ V_{IN}-V_{OUT} ≤ 10V		0.2	**10**	µA
	Temperature Stability			0.5		%
	Long Term Stability	T_A = 125°C, 1000Hrs		0.3		%
	RMS Output Noise	(% of V_{OUT}), 10Hz ≤ f ≤10kHz		0.003		%
	Thermal Resistance Junction-to-Case	3-Lead SOT-223		15.0		°C/W
		3-Lead TO-263		10		°C/W
	Thermal Resistance Junction-to-Ambient No air flow)	3-Lead SOT-223 (No heat sink)		136		°C/W
		3-Lead TO-263 (No heat sink)(6)		92		°C/W
		8-Lead WSON(7)		40		°C/W

(3) Load and line regulation are measured at constant junction room temperature.
(4) The dropout voltage is the input/output differential at which the circuit ceases to regulate against further reduction in input voltage. It is measured when the output voltage has dropped 100mV from the nominal value obtained at V_{IN} = V_{OUT} +1.5V.
(5) The minimum output current required to maintain regulation.
(6) Minimum pad size of 0.038in^2
(7) Thermal Performance for the WSON was obtained using JESD51-7 board with six vias and an ambient temperature of 22°C. For information about improved thermal performance and power dissipation for the WSON, refer to Application Note AN-1187 (SNOA401).

Copyright © 2000–2013, Texas Instruments Incorporated

TYPICAL PERFORMANCE CHARACTERISTICS

Dropout Voltage (V_{IN}-V_{OUT})

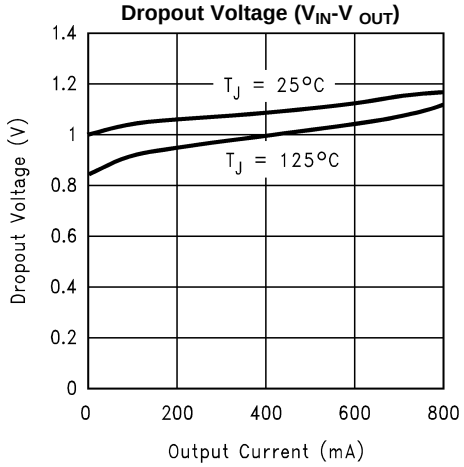

Figure 8.

Short-Circuit Current

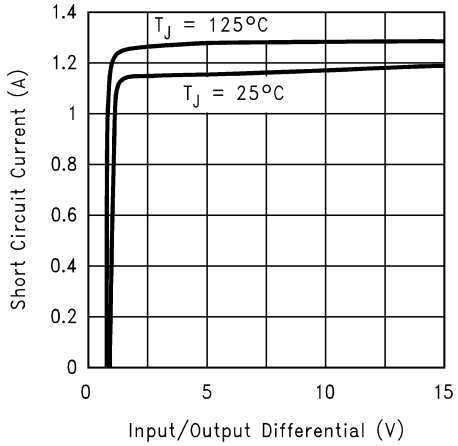

Figure 9.

Load Regulation

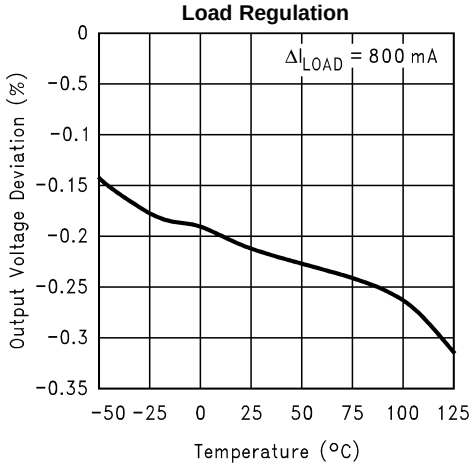

Figure 10.

LM1117-N-ADJ Ripple Rejection

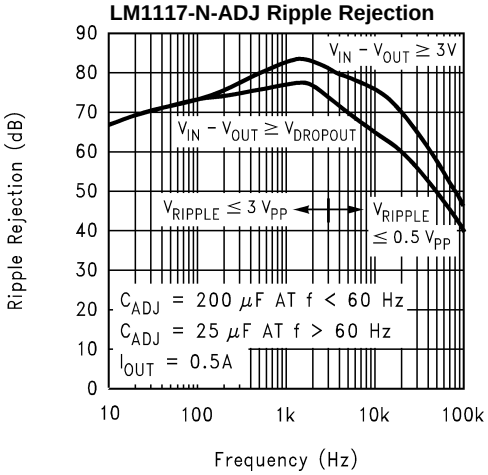

Figure 11.

LM1117-N-ADJ Ripple Rejection vs. Current

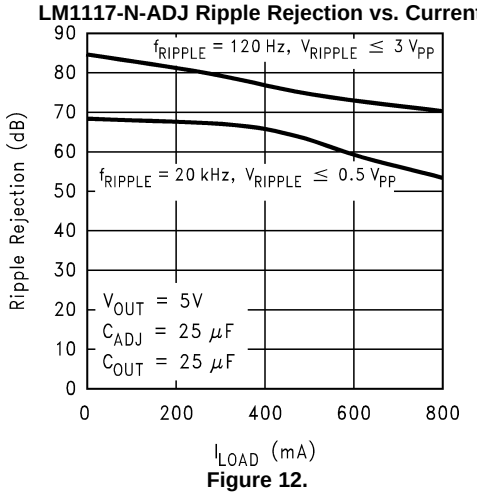

Figure 12.

Temperature Stability

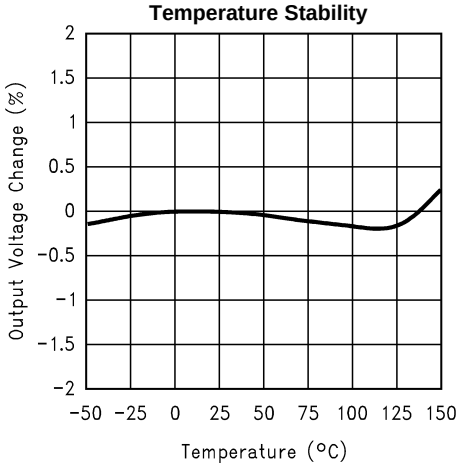

Figure 13.

TYPICAL PERFORMANCE CHARACTERISTICS (continued)

Adjust Pin Current

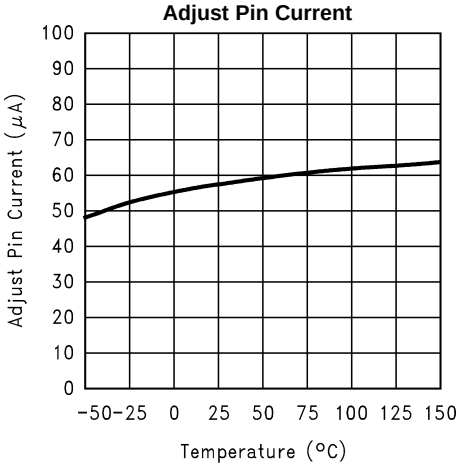

Figure 14.

LM1117-N-2.85 Load Transient Response

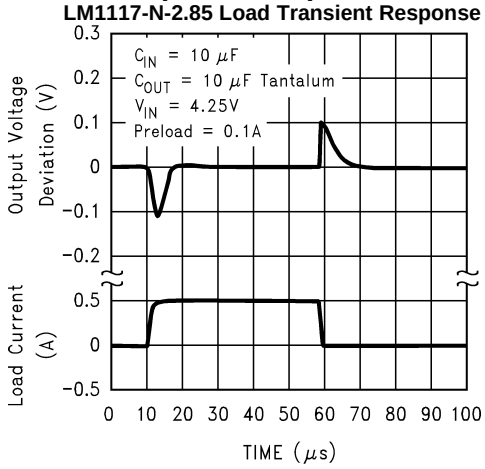

Figure 15.

LM1117-N-5.0 Load Transient Response

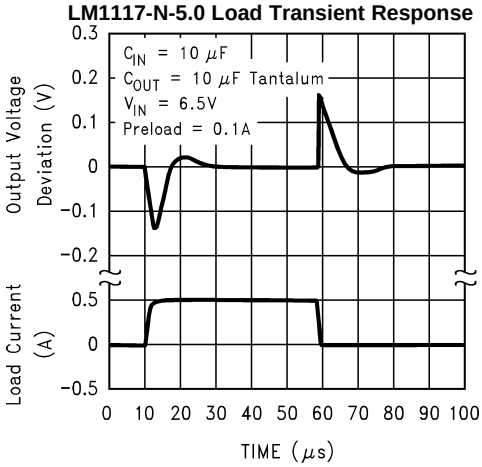

Figure 16.

LM1117-N-2.85 Line Transient Response

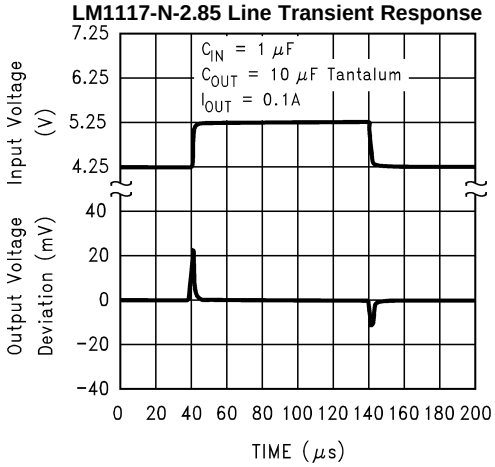

Figure 17.

LM1117-N-5.0 Line Transient Response

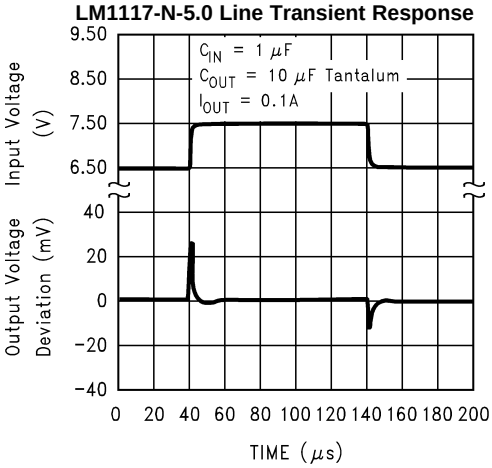

Figure 18.

Copyright © 2000–2013, Texas Instruments Incorporated

APPLICATION INFORMATION

EXTERNAL CAPACITORS/STABILITY

Input Bypass Capacitor

An input capacitor is recommended. A 10µF tantalum on the input is a suitable input bypassing for almost all applications.

Adjust Terminal Bypass Capacitor

The adjust terminal can be bypassed to ground with a bypass capacitor (C_{ADJ}) to improve ripple rejection. This bypass capacitor prevents ripple from being amplified as the output voltage is increased. At any ripple frequency, the impedance of the C_{ADJ} should be less than R1 to prevent the ripple from being amplified:

$$1/(2\pi * f_{RIPPLE} * C_{ADJ}) < R1 \quad (1)$$

The R1 is the resistor between the output and the adjust pin. Its value is normally in the range of 100-200Ω. For example, with R1 = 124Ω and f_{RIPPLE} = 120Hz, the C_{ADJ} should be > 11µF.

Output Capacitor

The output capacitor is critical in maintaining regulator stability, and must meet the required conditions for both minimum amount of capacitance and ESR (Equivalent Series Resistance). The minimum output capacitance required by the LM1117-N is 10µF, if a tantalum capacitor is used. Any increase of the output capacitance will merely improve the loop stability and transient response. The ESR of the output capacitor should range between 0.3Ω - 22Ω. In the case of the adjustable regulator, when the C_{ADJ} is used, a larger output capacitance (22µf tantalum) is required.

OUTPUT VOLTAGE

The LM1117-N adjustable version develops a 1.25V reference voltage, V_{REF}, between the output and the adjust terminal. As shown in Figure 19, this voltage is applied across resistor R1 to generate a constant current I1. The current I_{ADJ} from the adjust terminal could introduce error to the output. But since it is very small (60µA) compared with the I1 and very constant with line and load changes, the error can be ignored. The constant current I1 then flows through the output set resistor R2 and sets the output voltage to the desired level.

For fixed voltage devices, R1 and R2 are integrated inside the devices.

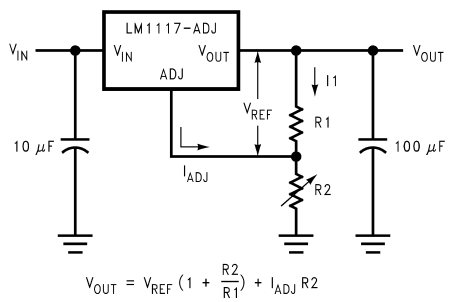

Figure 19. Basic Adjustable Regulator

LOAD REGULATION

The LM1117-N regulates the voltage that appears between its output and ground pins, or between its output and adjust pins. In some cases, line resistances can introduce errors to the voltage across the load. To obtain the best load regulation, a few precautions are needed.

Figure 20, shows a typical application using a fixed output regulator. The Rt1 and Rt2 are the line resistances. It is obvious that the V_{LOAD} is less than the V_{OUT} by the sum of the voltage drops along the line resistances. In this case, the load regulation seen at the R_{LOAD} would be degraded from the data sheet specification. To improve this, the load should be tied directly to the output terminal on the positive side and directly tied to the ground terminal on the negative side.

Copyright © 2000–2013, Texas Instruments Incorporated

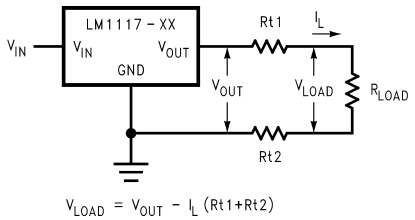

Figure 20. Typical Application using Fixed Output Regulator

When the adjustable regulator is used (Figure 21), the best performance is obtained with the positive side of the resistor R1 tied directly to the output terminal of the regulator rather than near the load. This eliminates line drops from appearing effectively in series with the reference and degrading regulation. For example, a 5V regulator with 0.05Ω resistance between the regulator and load will have a load regulation due to line resistance of 0.05Ω x I_L. If R1 (=125Ω) is connected near the load, the effective line resistance will be 0.05Ω (1+R2/R1) or in this case, it is 4 times worse. In addition, the ground side of the resistor R2 can be returned near the ground of the load to provide remote ground sensing and improve load regulation.

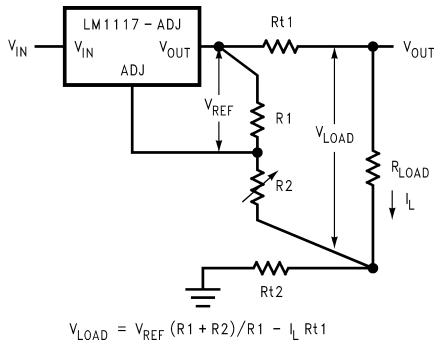

Figure 21. Best Load Regulation using Adjustable Output Regulator

PROTECTION DIODES

Under normal operation, the LM1117-N regulators do not need any protection diode. With the adjustable device, the internal resistance between the adjust and output terminals limits the current. No diode is needed to divert the current around the regulator even with capacitor on the adjust terminal. The adjust pin can take a transient signal of ±25V with respect to the output voltage without damaging the device.

When a output capacitor is connected to a regulator and the input is shorted to ground, the output capacitor will discharge into the output of the regulator. The discharge current depends on the value of the capacitor, the output voltage of the regulator, and rate of decrease of V_{IN}. In the LM1117-N regulators, the internal diode between the output and input pins can withstand microsecond surge currents of 10A to 20A. With an extremely large output capacitor (≥1000 µF), and with input instantaneously shorted to ground, the regulator could be damaged.

In this case, an external diode is recommended between the output and input pins to protect the regulator, as shown in Figure 22.

 Copyright © 2000–2013, Texas Instruments Incorporated

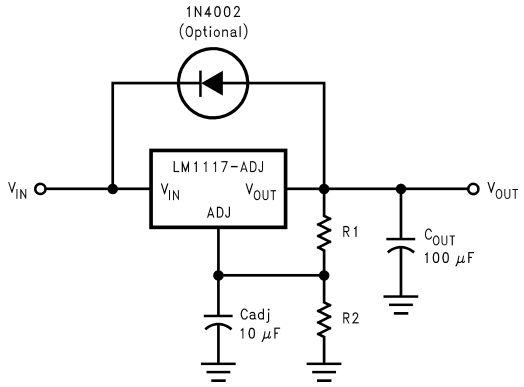

Figure 22. Regulator with Protection Diode

HEATSINK REQUIREMENTS

When an integrated circuit operates with an appreciable current, its junction temperature is elevated. It is important to quantify its thermal limits in order to achieve acceptable performance and reliability. This limit is determined by summing the individual parts consisting of a series of temperature rises from the semiconductor junction to the operating environment. A one-dimensional steady-state model of conduction heat transfer is demonstrated in Figure 23. The heat generated at the device junction flows through the die to the die attach pad, through the lead frame to the surrounding case material, to the printed circuit board, and eventually to the ambient environment. Below is a list of variables that may affect the thermal resistance and in turn the need for a heatsink.

$R\theta_{JC}$ (Component Variables)	$R\theta_{CA}$ (Application Variables)
Leadframe Size & Material	Mounting Pad Size, Material, & Location
No. of Conduction Pins	Placement of Mounting Pad
Die Size	PCB Size & Material
Die Attach Material	Traces Length & Width
Molding Compound Size and Material	Adjacent Heat Sources
	Volume of Air
	Ambient Temperatue
	Shape of Mounting Pad

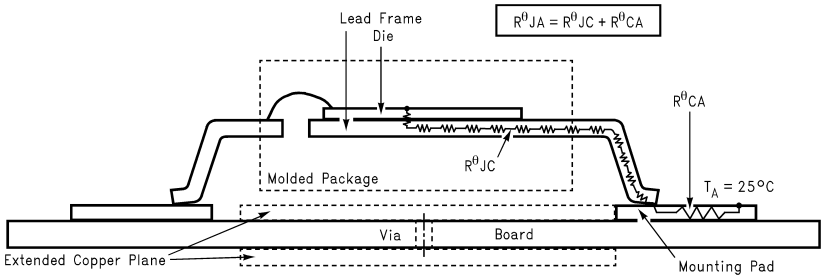

The case temperature is measured at the point where the leads contact with the mounting pad surface

Figure 23. Cross-Sectional View of Integrated Circuit Mounted on a Printed Circuit Board

The LM1117-N regulators have internal thermal shutdown to protect the device from over-heating. Under all possible operating conditions, the junction temperature of the LM1117-N must be within the range of 0°C to 125°C. A heatsink may be required depending on the maximum power dissipation and maximum ambient temperature of the application. To determine if a heatsink is needed, the power dissipated by the regulator, P_D , must be calculated:

$$I_{IN} = I_L + I_G \quad (2)$$

$$P_D = (V_{IN}-V_{OUT})I_L + V_{IN}I_G \quad (3)$$

Figure 24 shows the voltages and currents which are present in the circuit.

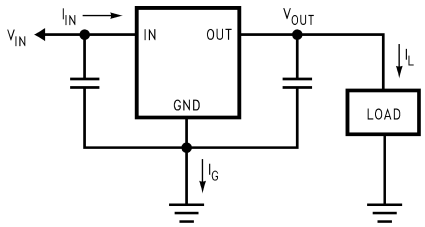

Figure 24. Power Dissipation Diagram

The next parameter which must be calculated is the maximum allowable temperature rise, T_R(max):

$$T_R(max) = T_J(max)-T_A(max)$$

where

- T_J(max) is the maximum allowable junction temperature (125°C) which will be encountered in the application
- T_A(max) is the maximum ambient temperature which will be encountered in the application (4)

Using the calculated values for T_R(max) and P_D, the maximum allowable value for the junction-to-ambient thermal resistance (θ_{JA}) can be calculated:

$$\theta_{JA} = T_R(max)/P_D \quad (5)$$

If the maximum allowable value for θ_{JA} is found to be ≥136°C/W for PFM package or ≥79°C/W for TO-220 package or ≥92°C/W for TO-263 package, no heatsink is needed since the package alone will dissipate enough heat to satisfy these requirements. If the calculated value for θ_{JA} falls below these limits, a heatsink is required.

As a design aid, Table 1 shows the value of the θ_{JA} of SOT-223 and PFM for different heatsink area. The copper patterns that we used to measure these θ_{JA}s are shown at the end of APPLICATION INFORMATION. Figure 25 and Figure 26 reflects the same test results as what are in the Table 1

Figure 27 and Figure 28 shows the maximum allowable power dissipation vs. ambient temperature for the SOT-223 and PFM device. Figure 29 and Figure 30 shows the maximum allowable power dissipation vs. copper area (in^2) for the SOT-223 and PFM devices. Please see AN1028 for power enhancement techniques to be used with SOT-223 and PFM packages.

Application Note AN-1187 (SNOA401) discusses improved thermal performance and power dissipation for the WSON.

Table 1. θ_{JA} Different Heatsink Area

Layout	Copper Area		Thermal Resistance	
	Top Side (in^2)(1)	Bottom Side (in^2)	(θ_{JA},°C/W) SOT-223	(θ_{JA},°C/W) PFM
1	0.0123	0	136	103
2	0.066	0	123	87
3	0.3	0	84	60
4	0.53	0	75	54
5	0.76	0	69	52
6	1	0	66	47
7	0	0.2	115	84
8	0	0.4	98	70
9	0	0.6	89	63
10	0	0.8	82	57
11	0	1	79	57
12	0.066	0.066	125	89
13	0.175	0.175	93	72

(1) Tab of device attached to topside copper

Copyright © 2000–2013, Texas Instruments Incorporated

Table 1. θ_{JA} Different Heatsink Area (continued)

Layout	Copper Area		Thermal Resistance	
14	0.284	0.284	83	61
15	0.392	0.392	75	55
16	0.5	0.5	70	53

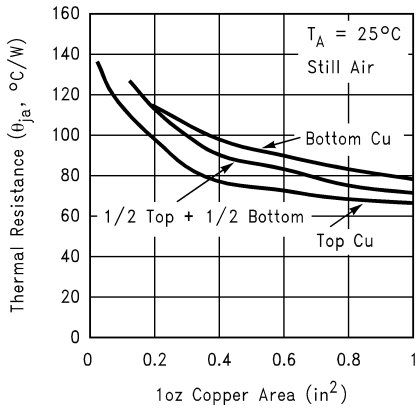

Figure 25. θ_{JA} vs. 1oz Copper Area for SOT-223

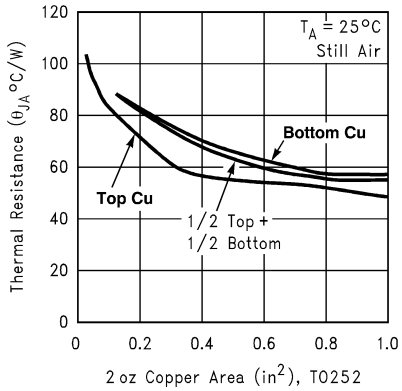

Figure 26. θ_{JA} vs. 2oz Copper Area for PFM

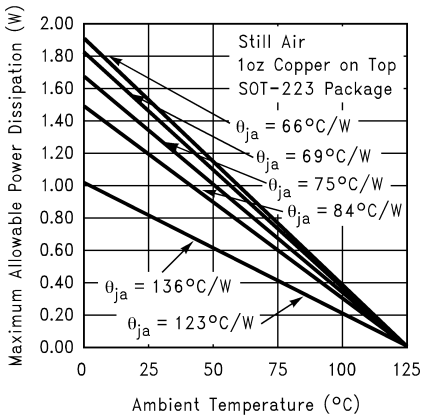

Figure 27. Maximum Allowable Power Dissipation vs. Ambient Temperature for SOT-223

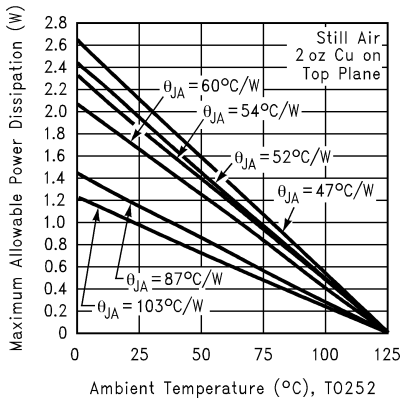

Figure 28. Maximum Allowable Power Dissipation vs. Ambient Temperature for PFM

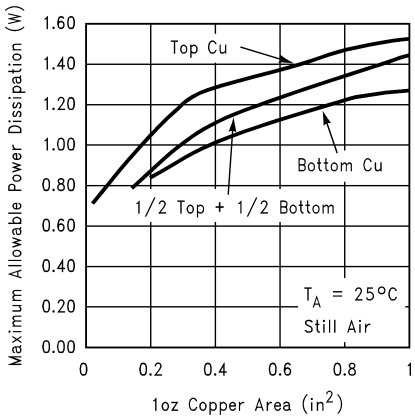

Figure 29. Maximum Allowable Power Dissipation vs. 1oz Copper Area for SOT-223

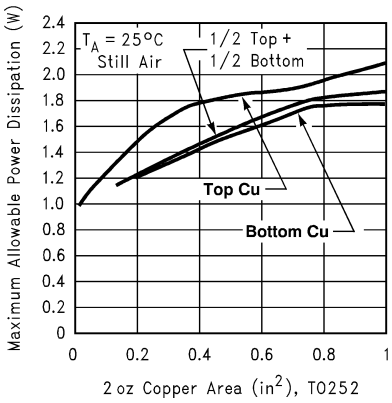

Figure 30. Maximum Allowable Power Dissipation vs. 2oz Copper Area for PFM

Copyright © 2000–2013, Texas Instruments Incorporated

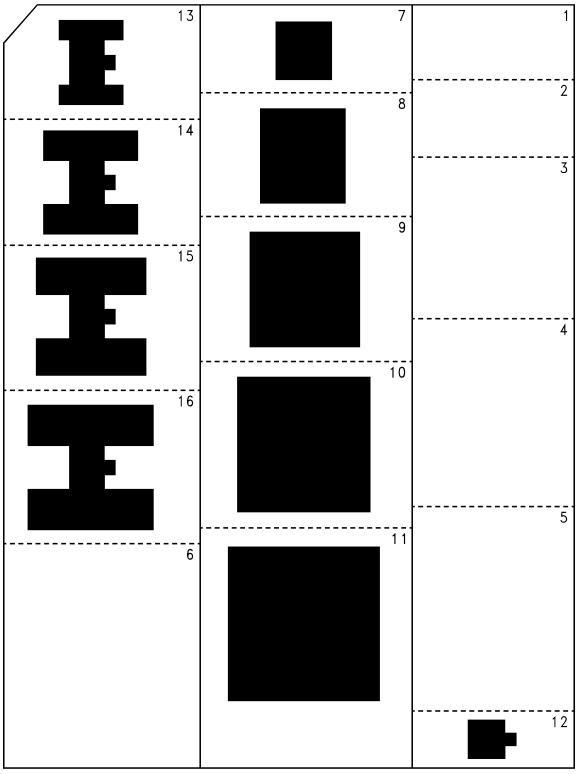

Figure 31. Top View of the Thermal Test Pattern in Actual Scale

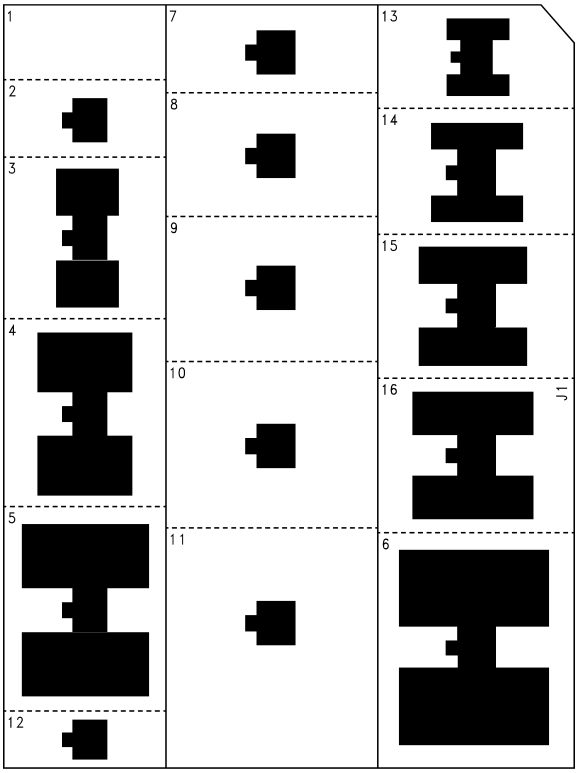

Figure 32. Bottom View of the Thermal Test Pattern in Actual Scale

TYPICAL APPLICATION CIRCUITS

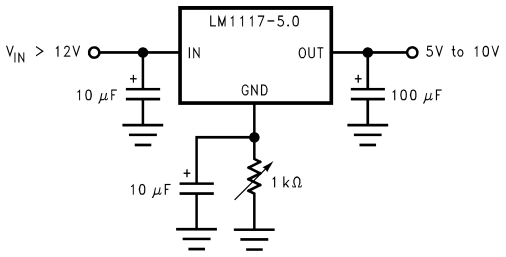

Figure 33. Adjusting Output of Fixed Regulators

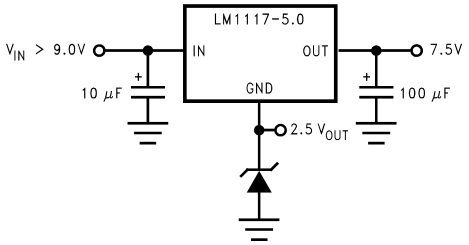

Figure 34. Regulator with Reference

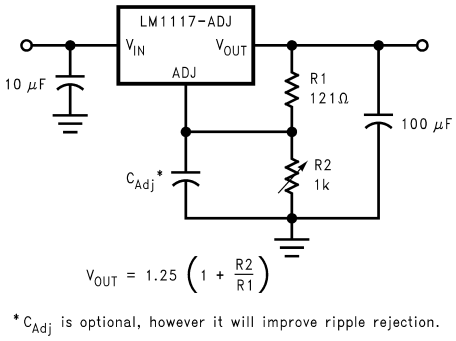

Figure 35. 1.25V to 10V Adjustable Regulator with Improved Ripple Rejection

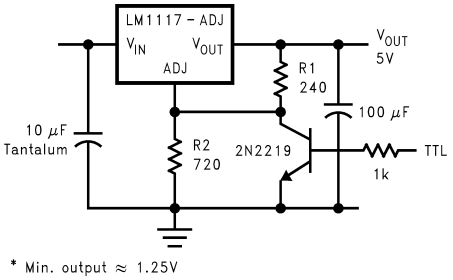

Figure 36. 5V Logic Regulator with Electronic Shutdown*

Copyright © 2000–2013, Texas Instruments Incorporated

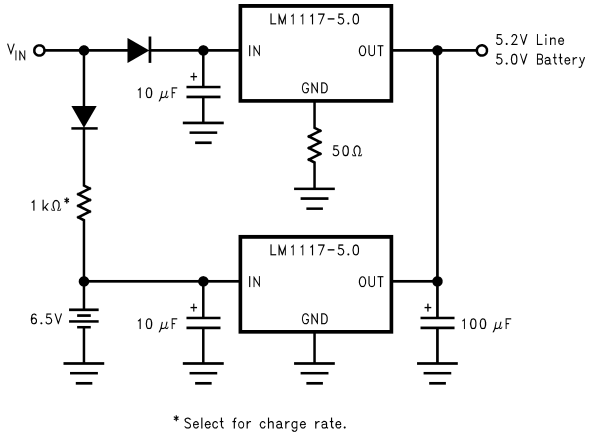

Figure 37. Battery Backed-Up Regulated Supply

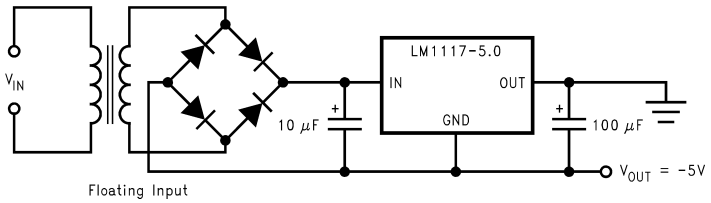

Figure 38. Low Dropout Negative Supply

REVISION HISTORY

Changes from Revision L (March 2013) to Revision M	Page
• Changed layout of National Data Sheet to TI format	17

Copyright © 2000–2013, Texas Instruments Incorporated

PACKAGING INFORMATION

Orderable Device	Status (1)	Package Type	Package Drawing	Pins	Package Qty	Eco Plan (2)	Lead/Ball Finish	MSL Peak Temp (3)	Op Temp (°C)	Top-Side Markings (4)	Samples
LM1117DT-1.8/NOPB	ACTIVE	PFM	NDP	3	75	Green (RoHS & no Sb/Br)	CU SN	Level-2-260C-1 YEAR	0 to 125	LM1117 DT-1.8	Samples
LM1117DT-2.5/NOPB	ACTIVE	PFM	NDP	3	75	Green (RoHS & no Sb/Br)	CU SN	Level-2-260C-1 YEAR	0 to 125	LM1117 DT-2.5	Samples
LM1117DT-3.3/NOPB	ACTIVE	PFM	NDP	3	75	Green (RoHS & no Sb/Br)	CU SN	Level-2-260C-1 YEAR	0 to 125	LM1117 DT-3.3	Samples
LM1117DT-5.0/NOPB	ACTIVE	PFM	NDP	3	75	Green (RoHS & no Sb/Br)	CU SN	Level-2-260C-1 YEAR	0 to 125	LM1117 DT-5.0	Samples
LM1117DT-ADJ/NOPB	ACTIVE	PFM	NDP	3	75	Green (RoHS & no Sb/Br)	CU SN	Level-2-260C-1 YEAR	0 to 125	LM1117 DT-ADJ	Samples
LM1117DTX-1.8/NOPB	ACTIVE	PFM	NDP	3	2500	Green (RoHS & no Sb/Br)	CU SN	Level-2-260C-1 YEAR	0 to 125	LM1117 DT-1.8	Samples
LM1117DTX-2.5/NOPB	ACTIVE	PFM	NDP	3	2500	Green (RoHS & no Sb/Br)	CU SN	Level-2-260C-1 YEAR	0 to 125	LM1117 DT-2.5	Samples
LM1117DTX-3.3/NOPB	ACTIVE	PFM	NDP	3	2500	Green (RoHS & no Sb/Br)	CU SN	Level-2-260C-1 YEAR	0 to 125	LM1117 DT-3.3	Samples
LM1117DTX-5.0/NOPB	ACTIVE	PFM	NDP	3	2500	Green (RoHS & no Sb/Br)	CU SN	Level-2-260C-1 YEAR	0 to 125	LM1117 DT-5.0	Samples
LM1117DTX-ADJ/NOPB	ACTIVE	PFM	NDP	3	2500	Green (RoHS & no Sb/Br)	CU SN	Level-2-260C-1 YEAR	0 to 125	LM1117 DT-ADJ	Samples
LM1117IDT-3.3/NOPB	ACTIVE	PFM	NDP	3	75	Green (RoHS & no Sb/Br)	CU SN	Level-2-260C-1 YEAR	-40 to 125	LM1117 IDT-3.3	Samples
LM1117IDT-5.0/NOPB	ACTIVE	PFM	NDP	3	75	Green (RoHS & no Sb/Br)	CU SN	Level-2-260C-1 YEAR	-40 to 125	LM1117 IDT-5.0	Samples
LM1117IDT-ADJ/NOPB	ACTIVE	PFM	NDP	3	75	Green (RoHS & no Sb/Br)	CU SN	Level-2-260C-1 YEAR	-40 to 125	LM1117 IDT-ADJ	Samples
LM1117IDTX-3.3/NOPB	ACTIVE	PFM	NDP	3	2500	Green (RoHS & no Sb/Br)	CU SN	Level-2-260C-1 YEAR	-40 to 125	LM1117 IDT-3.3	Samples
LM1117IDTX-5.0/NOPB	ACTIVE	PFM	NDP	3	2500	Green (RoHS & no Sb/Br)	CU SN	Level-2-260C-1 YEAR	-40 to 125	LM1117 IDT-5.0	Samples
LM1117IDTX-ADJ/NOPB	ACTIVE	PFM	NDP	3	2500	Green (RoHS & no Sb/Br)	CU SN	Level-2-260C-1 YEAR	-40 to 125	LM1117 IDT-ADJ	Samples
LM1117ILD-ADJ/NOPB	ACTIVE	WSON	NGN	8	1000	Green (RoHS & no Sb/Br)	SN	Level-3-260C-168 HR	-40 to 125	1117IAD	Samples

Orderable Device	Status (1)	Package Type	Package Drawing	Pins	Package Qty	Eco Plan (2)	Lead/Ball Finish	MSL Peak Temp (3)	Op Temp (°C)	Top-Side Markings (4)	Samples
LM1117IMP-3.3/NOPB	ACTIVE	SOT-223	DCY	4	1000	Green (RoHS & no Sb/Br)	CU SN	Level-1-260C-UNLIM	-40 to 125	N05B	Samples
LM1117IMP-5.0/NOPB	ACTIVE	SOT-223	DCY	4	1000	Green (RoHS & no Sb/Br)	CU SN	Level-1-260C-UNLIM	-40 to 125	N06B	Samples
LM1117IMP-ADJ/NOPB	ACTIVE	SOT-223	DCY	4	1000	Green (RoHS & no Sb/Br)	CU SN	Level-1-260C-UNLIM	-40 to 125	N03B	Samples
LM1117IMPX-3.3	ACTIVE	SOT-223	DCY	4		TBD	Call TI	Call TI	-40 to 125	N05B	Samples
LM1117IMPX-3.3/NOPB	ACTIVE	SOT-223	DCY	4	2000	Green (RoHS & no Sb/Br)	CU SN	Level-1-260C-UNLIM	-40 to 125	N05B	Samples
LM1117IMPX-5.0	ACTIVE	SOT-223	DCY	4	2000	TBD	Call TI	Call TI	-40 to 125	N06B	Samples
LM1117IMPX-5.0/NOPB	ACTIVE	SOT-223	DCY	4	2000	Green (RoHS & no Sb/Br)	CU SN	Level-1-260C-UNLIM	-40 to 125	N06B	Samples
LM1117IMPX-ADJ/NOPB	ACTIVE	SOT-223	DCY	4	2000	Green (RoHS & no Sb/Br)	CU SN	Level-1-260C-UNLIM	-40 to 125	N03B	Samples
LM1117LD-1.8/NOPB	ACTIVE	WSON	NGN	8	1000	Green (RoHS & no Sb/Br)	SN	Level-3-260C-168 HR	0 to 125	1117-18	Samples
LM1117LD-2.5/NOPB	ACTIVE	WSON	NGN	8	1000	Green (RoHS & no Sb/Br)	SN	Level-3-260C-168 HR	0 to 125	1117-25	Samples
LM1117LD-3.3/NOPB	ACTIVE	WSON	NGN	8	1000	Green (RoHS & no Sb/Br)	SN	Level-3-260C-168 HR	0 to 125	1117-33	Samples
LM1117LD-ADJ/NOPB	ACTIVE	WSON	NGN	8	1000	Green (RoHS & no Sb/Br)	CU SN	Level-3-260C-168 HR	0 to 125	1117ADJ	Samples
LM1117LDX-1.8	ACTIVE	WSON	NGN	8	4500	TBD	Call TI	Call TI	0 to 125	1117-18	Samples
LM1117LDX-1.8/NOPB	ACTIVE	WSON	NGN	8	4500	Green (RoHS & no Sb/Br)	SN	Level-3-260C-168 HR	0 to 125	1117-18	Samples
LM1117LDX-ADJ/NOPB	ACTIVE	WSON	NGN	8	4500	Green (RoHS & no Sb/Br)	SN	Level-3-260C-168 HR	0 to 125	1117ADJ	Samples
LM1117MP-1.8/NOPB	ACTIVE	SOT-223	DCY	4	1000	Green (RoHS & no Sb/Br)	CU SN	Level-1-260C-UNLIM	0 to 125	N12A	Samples
LM1117MP-2.5/NOPB	ACTIVE	SOT-223	DCY	4	1000	Green (RoHS & no Sb/Br)	CU SN	Level-1-260C-UNLIM	0 to 125	N13A	Samples
LM1117MP-3.3/NOPB	ACTIVE	SOT-223	DCY	4	1000	Green (RoHS & no Sb/Br)	CU SN	Level-1-260C-UNLIM	0 to 125	N05A	Samples

Orderable Device	Status (1)	Package Type	Package Drawing	Pins	Package Qty	Eco Plan (2)	Lead/Ball Finish	MSL Peak Temp (3)	Op Temp (°C)	Top-Side Markings (4)	Samples
LM1117MP-5.0/NOPB	ACTIVE	SOT-223	DCY	4	1000	Green (RoHS & no Sb/Br)	CU SN	Level-1-260C-UNLIM	0 to 125	N06A	Samples
LM1117MP-ADJ/NOPB	ACTIVE	SOT-223	DCY	4	1000	Green (RoHS & no Sb/Br)	CU SN	Level-1-260C-UNLIM	0 to 125	N03A	Samples
LM1117MPX-1.8/NOPB	ACTIVE	SOT-223	DCY	4	2000	Green (RoHS & no Sb/Br)	CU SN	Level-1-260C-UNLIM	0 to 125	N12A	Samples
LM1117MPX-2.5/NOPB	ACTIVE	SOT-223	DCY	4	2000	Green (RoHS & no Sb/Br)	CU SN	Level-1-260C-UNLIM	0 to 125	N13A	Samples
LM1117MPX-3.3/NOPB	ACTIVE	SOT-223	DCY	4	2000	Green (RoHS & no Sb/Br)	CU SN	Level-1-260C-UNLIM	0 to 125	N05A	Samples
LM1117MPX-5.0	ACTIVE	SOT-223	DCY	4	2000	TBD	Call TI	Call TI	0 to 125	N06A	Samples
LM1117MPX-5.0/NOPB	ACTIVE	SOT-223	DCY	4	2000	Green (RoHS & no Sb/Br)	CU SN	Level-1-260C-UNLIM	0 to 125	N06A	Samples
LM1117MPX-ADJ/NOPB	ACTIVE	SOT-223	DCY	4	2000	Green (RoHS & no Sb/Br)	CU SN	Level-1-260C-UNLIM	0 to 125	N03A	Samples
LM1117S-ADJ/NOPB	ACTIVE	DDPAK/ TO-263	KTT	3	45	Pb-Free (RoHS Exempt)	CU SN	Level-3-245C-168 HR	0 to 125	LM1117S ADJ	Samples
LM1117SX-3.3/NOPB	ACTIVE	DDPAK/ TO-263	KTT	3	500	Pb-Free (RoHS Exempt)	CU SN	Level-3-245C-168 HR	0 to 125	LM1117S 3.3	Samples
LM1117SX-5.0/NOPB	ACTIVE	DDPAK/ TO-263	KTT	3	500	Pb-Free (RoHS Exempt)	CU SN	Level-3-245C-168 HR	0 to 125	LM1117S 5.0	Samples
LM1117SX-ADJ/NOPB	ACTIVE	DDPAK/ TO-263	KTT	3	500	Pb-Free (RoHS Exempt)	CU SN	Level-3-245C-168 HR	0 to 125	LM1117S ADJ	Samples
LM1117T-2.5/NOPB	ACTIVE	TO-220	NDE	3	45	Green (RoHS & no Sb/Br)	CU SN	Level-1-NA-UNLIM	0 to 125	LM1117T 2.5	Samples
LM1117T-3.3/NOPB	ACTIVE	TO-220	NDE	3	45	Green (RoHS & no Sb/Br)	CU SN	Level-1-NA-UNLIM	0 to 125	LM1117T 3.3	Samples
LM1117T-5.0/NOPB	ACTIVE	TO-220	NDE	3	45	Green (RoHS & no Sb/Br)	CU SN	Level-1-NA-UNLIM	0 to 125	LM1117T 5.0	Samples
LM1117T-ADJ/NOPB	ACTIVE	TO-220	NDE	3	45	Green (RoHS & no Sb/Br)	CU SN	Level-1-NA-UNLIM	0 to 125	LM1117T ADJ	Samples

(1) The marketing status values are defined as follows:
ACTIVE: Product device recommended for new designs.
LIFEBUY: TI has announced that the device will be discontinued, and a lifetime-buy period is in effect.
NRND: Not recommended for new designs. Device is in production to support existing customers, but TI does not recommend using this part in a new design.

PREVIEW: Device has been announced but is not in production. Samples may or may not be available.
OBSOLETE: TI has discontinued the production of the device.

(2) Eco Plan - The planned eco-friendly classification: Pb-Free (RoHS), Pb-Free (RoHS Exempt), or Green (RoHS & no Sb/Br) - please check http://www.ti.com/productcontent for the latest availability information and additional product content details.
TBD: The Pb-Free/Green conversion plan has not been defined.
Pb-Free (RoHS): TI's terms "Lead-Free" or "Pb-Free" mean semiconductor products that are compatible with the current RoHS requirements for all 6 substances, including the requirement that lead not exceed 0.1% by weight in homogeneous materials. Where designed to be soldered at high temperatures, TI Pb-Free products are suitable for use in specified lead-free processes.
Pb-Free (RoHS Exempt): This component has a RoHS exemption for either 1) lead-based flip-chip solder bumps used between the die and package, or 2) lead-based die adhesive used between the die and leadframe. The component is otherwise considered Pb-Free (RoHS compatible) as defined above.
Green (RoHS & no Sb/Br): TI defines "Green" to mean Pb-Free (RoHS compatible), and free of Bromine (Br) and Antimony (Sb) based flame retardants (Br or Sb do not exceed 0.1% by weight in homogeneous material)

(3) MSL, Peak Temp. -- The Moisture Sensitivity Level rating according to the JEDEC industry standard classifications, and peak solder temperature.

(4) Multiple Top-Side Markings will be inside parentheses. Only one Top-Side Marking contained in parentheses and separated by a "~" will appear on a device. If a line is indented then it is a continuation of the previous line and the two combined represent the entire Top-Side Marking for that device.

Important Information and Disclaimer: The information provided on this page represents TI's knowledge and belief as of the date that it is provided. TI bases its knowledge and belief on information provided by third parties, and makes no representation or warranty as to the accuracy of such information. Efforts are underway to better integrate information from third parties. TI has taken and continues to take reasonable steps to provide representative and accurate information but may not have conducted destructive testing or chemical analysis on incoming materials and chemicals. TI and TI suppliers consider certain information to be proprietary, and thus CAS numbers and other limited information may not be available for release.

In no event shall TI's liability arising out of such information exceed the total purchase price of the TI part(s) at issue in this document sold by TI to Customer on an annual basis.

TAPE AND REEL INFORMATION

REEL DIMENSIONS

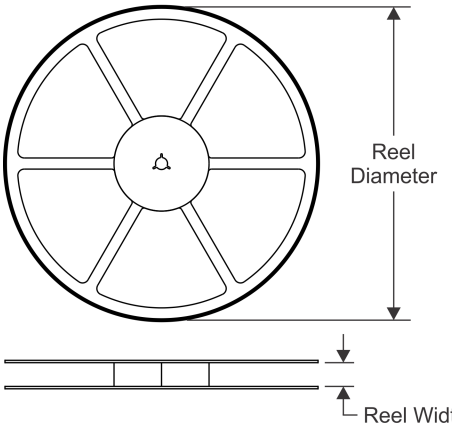

TAPE DIMENSIONS

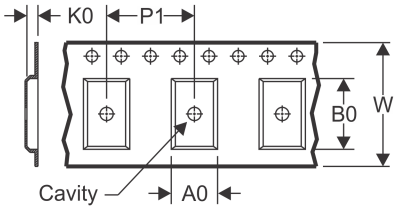

A0	Dimension designed to accommodate the component width
B0	Dimension designed to accommodate the component length
K0	Dimension designed to accommodate the component thickness
W	Overall width of the carrier tape
P1	Pitch between successive cavity centers

QUADRANT ASSIGNMENTS FOR PIN 1 ORIENTATION IN TAPE

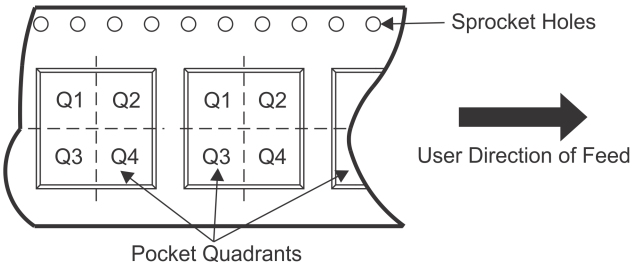

*All dimensions are nominal

Device	Package Type	Package Drawing	Pins	SPQ	Reel Diameter (mm)	Reel Width W1 (mm)	A0 (mm)	B0 (mm)	K0 (mm)	P1 (mm)	W (mm)	Pin1 Quadrant
LM1117DTX-1.8/NOPB	PFM	NDP	3	2500	330.0	16.4	6.9	10.5	2.7	8.0	16.0	Q2
LM1117DTX-2.5/NOPB	PFM	NDP	3	2500	330.0	16.4	6.9	10.5	2.7	8.0	16.0	Q2
LM1117DTX-3.3/NOPB	PFM	NDP	3	2500	330.0	16.4	6.9	10.5	2.7	8.0	16.0	Q2
LM1117DTX-5.0/NOPB	PFM	NDP	3	2500	330.0	16.4	6.9	10.5	2.7	8.0	16.0	Q2
LM1117DTX-ADJ/NOPB	PFM	NDP	3	2500	330.0	16.4	6.9	10.5	2.7	8.0	16.0	Q2
LM1117IDTX-3.3/NOPB	PFM	NDP	3	2500	330.0	16.4	6.9	10.5	2.7	8.0	16.0	Q2
LM1117IDTX-5.0/NOPB	PFM	NDP	3	2500	330.0	16.4	6.9	10.5	2.7	8.0	16.0	Q2
LM1117IDTX-ADJ/NOPB	PFM	NDP	3	2500	330.0	16.4	6.9	10.5	2.7	8.0	16.0	Q2
LM1117ILD-ADJ/NOPB	WSON	NGN	8	1000	178.0	12.4	4.3	4.3	1.3	8.0	12.0	Q1
LM1117IMP-3.3/NOPB	SOT-223	DCY	4	1000	330.0	16.4	7.0	7.5	2.2	12.0	16.0	Q3
LM1117IMP-5.0/NOPB	SOT-223	DCY	4	1000	330.0	16.4	7.0	7.5	2.2	12.0	16.0	Q3
LM1117IMP-ADJ/NOPB	SOT-223	DCY	4	1000	330.0	16.4	7.0	7.5	2.2	12.0	16.0	Q3
LM1117IMPX-3.3	SOT-223	DCY	4	0	330.0	16.4	7.0	7.5	2.2	12.0	16.0	Q3
LM1117IMPX-3.3/NOPB	SOT-223	DCY	4	2000	330.0	16.4	7.0	7.5	2.2	12.0	16.0	Q3
LM1117IMPX-5.0	SOT-223	DCY	4	2000	330.0	16.4	7.0	7.5	2.2	12.0	16.0	Q3
LM1117IMPX-5.0/NOPB	SOT-223	DCY	4	2000	330.0	16.4	7.0	7.5	2.2	12.0	16.0	Q3
LM1117IMPX-ADJ/NOPB	SOT-223	DCY	4	2000	330.0	16.4	7.0	7.5	2.2	12.0	16.0	Q3
LM1117LD-1.8/NOPB	WSON	NGN	8	1000	178.0	12.4	4.3	4.3	1.3	8.0	12.0	Q1

Device	Package Type	Package Drawing	Pins	SPQ	Reel Diameter (mm)	Reel Width W1 (mm)	A0 (mm)	B0 (mm)	K0 (mm)	P1 (mm)	W (mm)	Pin1 Quadrant
LM1117LD-2.5/NOPB	WSON	NGN	8	1000	178.0	12.4	4.3	4.3	1.3	8.0	12.0	Q1
LM1117LD-3.3/NOPB	WSON	NGN	8	1000	178.0	12.4	4.3	4.3	1.3	8.0	12.0	Q1
LM1117LD-ADJ/NOPB	WSON	NGN	8	1000	178.0	12.4	4.3	4.3	1.3	8.0	12.0	Q1
LM1117LDX-1.8	WSON	NGN	8	4500	330.0	12.4	4.3	4.3	1.3	8.0	12.0	Q1
LM1117LDX-1.8/NOPB	WSON	NGN	8	4500	330.0	12.4	4.3	4.3	1.3	8.0	12.0	Q1
LM1117LDX-ADJ/NOPB	WSON	NGN	8	4500	330.0	12.4	4.3	4.3	1.3	8.0	12.0	Q1
LM1117MP-1.8/NOPB	SOT-223	DCY	4	1000	330.0	16.4	7.0	7.5	2.2	12.0	16.0	Q3
LM1117MP-2.5/NOPB	SOT-223	DCY	4	1000	330.0	16.4	7.0	7.5	2.2	12.0	16.0	Q3
LM1117MP-3.3/NOPB	SOT-223	DCY	4	1000	330.0	16.4	7.0	7.5	2.2	12.0	16.0	Q3
LM1117MP-5.0/NOPB	SOT-223	DCY	4	1000	330.0	16.4	7.0	7.5	2.2	12.0	16.0	Q3
LM1117MP-ADJ/NOPB	SOT-223	DCY	4	1000	330.0	16.4	7.0	7.5	2.2	12.0	16.0	Q3
LM1117MPX-1.8/NOPB	SOT-223	DCY	4	2000	330.0	16.4	7.0	7.5	2.2	12.0	16.0	Q3
LM1117MPX-2.5/NOPB	SOT-223	DCY	4	2000	330.0	16.4	7.0	7.5	2.2	12.0	16.0	Q3
LM1117MPX-3.3/NOPB	SOT-223	DCY	4	2000	330.0	16.4	7.0	7.5	2.2	12.0	16.0	Q3
LM1117MPX-5.0	SOT-223	DCY	4	2000	330.0	16.4	7.0	7.5	2.2	12.0	16.0	Q3
LM1117MPX-5.0/NOPB	SOT-223	DCY	4	2000	330.0	16.4	7.0	7.5	2.2	12.0	16.0	Q3
LM1117MPX-ADJ/NOPB	SOT-223	DCY	4	2000	330.0	16.4	7.0	7.5	2.2	12.0	16.0	Q3
LM1117SX-3.3/NOPB	DDPAK/ TO-263	KTT	3	500	330.0	24.4	10.75	14.85	5.0	16.0	24.0	Q2
LM1117SX-5.0/NOPB	DDPAK/ TO-263	KTT	3	500	330.0	24.4	10.75	14.85	5.0	16.0	24.0	Q2
LM1117SX-ADJ/NOPB	DDPAK/ TO-263	KTT	3	500	330.0	24.4	10.75	14.85	5.0	16.0	24.0	Q2

TAPE AND REEL BOX DIMENSIONS

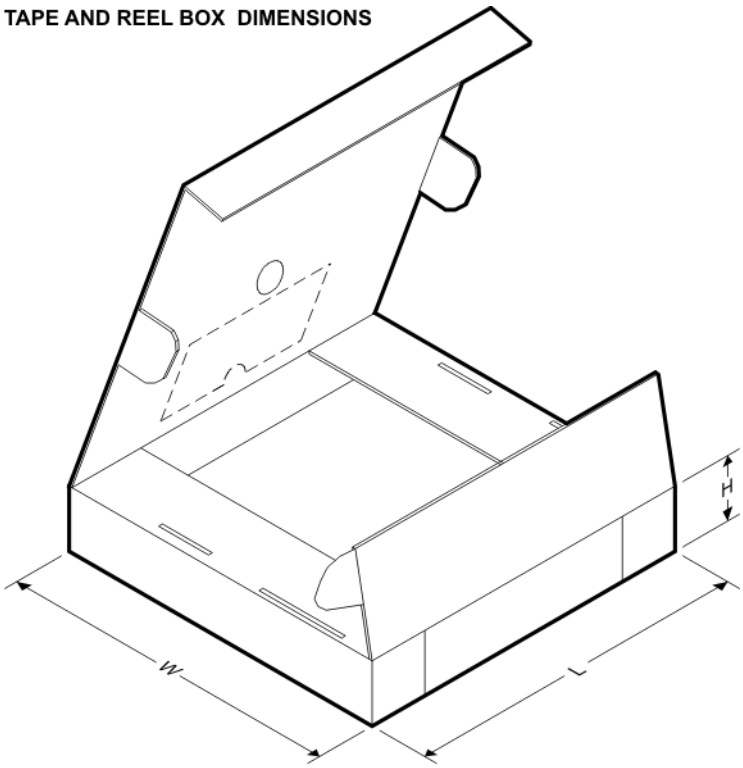

*All dimensions are nominal

Device	Package Type	Package Drawing	Pins	SPQ	Length (mm)	Width (mm)	Height (mm)
LM1117DTX-1.8/NOPB	PFM	NDP	3	2500	367.0	367.0	38.0
LM1117DTX-2.5/NOPB	PFM	NDP	3	2500	367.0	367.0	38.0
LM1117DTX-3.3/NOPB	PFM	NDP	3	2500	367.0	367.0	38.0
LM1117DTX-5.0/NOPB	PFM	NDP	3	2500	367.0	367.0	38.0
LM1117DTX-ADJ/NOPB	PFM	NDP	3	2500	367.0	367.0	38.0
LM1117IDTX-3.3/NOPB	PFM	NDP	3	2500	367.0	367.0	38.0
LM1117IDTX-5.0/NOPB	PFM	NDP	3	2500	367.0	367.0	38.0
LM1117IDTX-ADJ/NOPB	PFM	NDP	3	2500	367.0	367.0	38.0
LM1117ILD-ADJ/NOPB	WSON	NGN	8	1000	213.0	191.0	55.0
LM1117IMP-3.3/NOPB	SOT-223	DCY	4	1000	367.0	367.0	35.0
LM1117IMP-5.0/NOPB	SOT-223	DCY	4	1000	367.0	367.0	35.0
LM1117IMP-ADJ/NOPB	SOT-223	DCY	4	1000	367.0	367.0	35.0
LM1117IMPX-3.3	SOT-223	DCY	4	0	367.0	367.0	35.0
LM1117IMPX-3.3/NOPB	SOT-223	DCY	4	2000	367.0	367.0	35.0
LM1117IMPX-5.0	SOT-223	DCY	4	2000	367.0	367.0	35.0
LM1117IMPX-5.0/NOPB	SOT-223	DCY	4	2000	367.0	367.0	35.0
LM1117IMPX-ADJ/NOPB	SOT-223	DCY	4	2000	367.0	367.0	35.0
LM1117LD-1.8/NOPB	WSON	NGN	8	1000	213.0	191.0	55.0
LM1117LD-2.5/NOPB	WSON	NGN	8	1000	213.0	191.0	55.0
LM1117LD-3.3/NOPB	WSON	NGN	8	1000	213.0	191.0	55.0

Device	Package Type	Package Drawing	Pins	SPQ	Length (mm)	Width (mm)	Height (mm)
LM1117LD-ADJ/NOPB	WSON	NGN	8	1000	213.0	191.0	55.0
LM1117LDX-1.8	WSON	NGN	8	4500	349.0	337.0	45.0
LM1117LDX-1.8/NOPB	WSON	NGN	8	4500	367.0	367.0	35.0
LM1117LDX-ADJ/NOPB	WSON	NGN	8	4500	367.0	367.0	35.0
LM1117MP-1.8/NOPB	SOT-223	DCY	4	1000	367.0	367.0	35.0
LM1117MP-2.5/NOPB	SOT-223	DCY	4	1000	367.0	367.0	35.0
LM1117MP-3.3/NOPB	SOT-223	DCY	4	1000	367.0	367.0	35.0
LM1117MP-5.0/NOPB	SOT-223	DCY	4	1000	367.0	367.0	35.0
LM1117MP-ADJ/NOPB	SOT-223	DCY	4	1000	367.0	367.0	35.0
LM1117MPX-1.8/NOPB	SOT-223	DCY	4	2000	367.0	367.0	35.0
LM1117MPX-2.5/NOPB	SOT-223	DCY	4	2000	367.0	367.0	35.0
LM1117MPX-3.3/NOPB	SOT-223	DCY	4	2000	367.0	367.0	35.0
LM1117MPX-5.0	SOT-223	DCY	4	2000	367.0	367.0	35.0
LM1117MPX-5.0/NOPB	SOT-223	DCY	4	2000	367.0	367.0	35.0
LM1117MPX-ADJ/NOPB	SOT-223	DCY	4	2000	367.0	367.0	35.0
LM1117SX-3.3/NOPB	DDPAK/TO-263	KTT	3	500	367.0	367.0	45.0
LM1117SX-5.0/NOPB	DDPAK/TO-263	KTT	3	500	367.0	367.0	45.0
LM1117SX-ADJ/NOPB	DDPAK/TO-263	KTT	3	500	367.0	367.0	45.0

NDE0003B

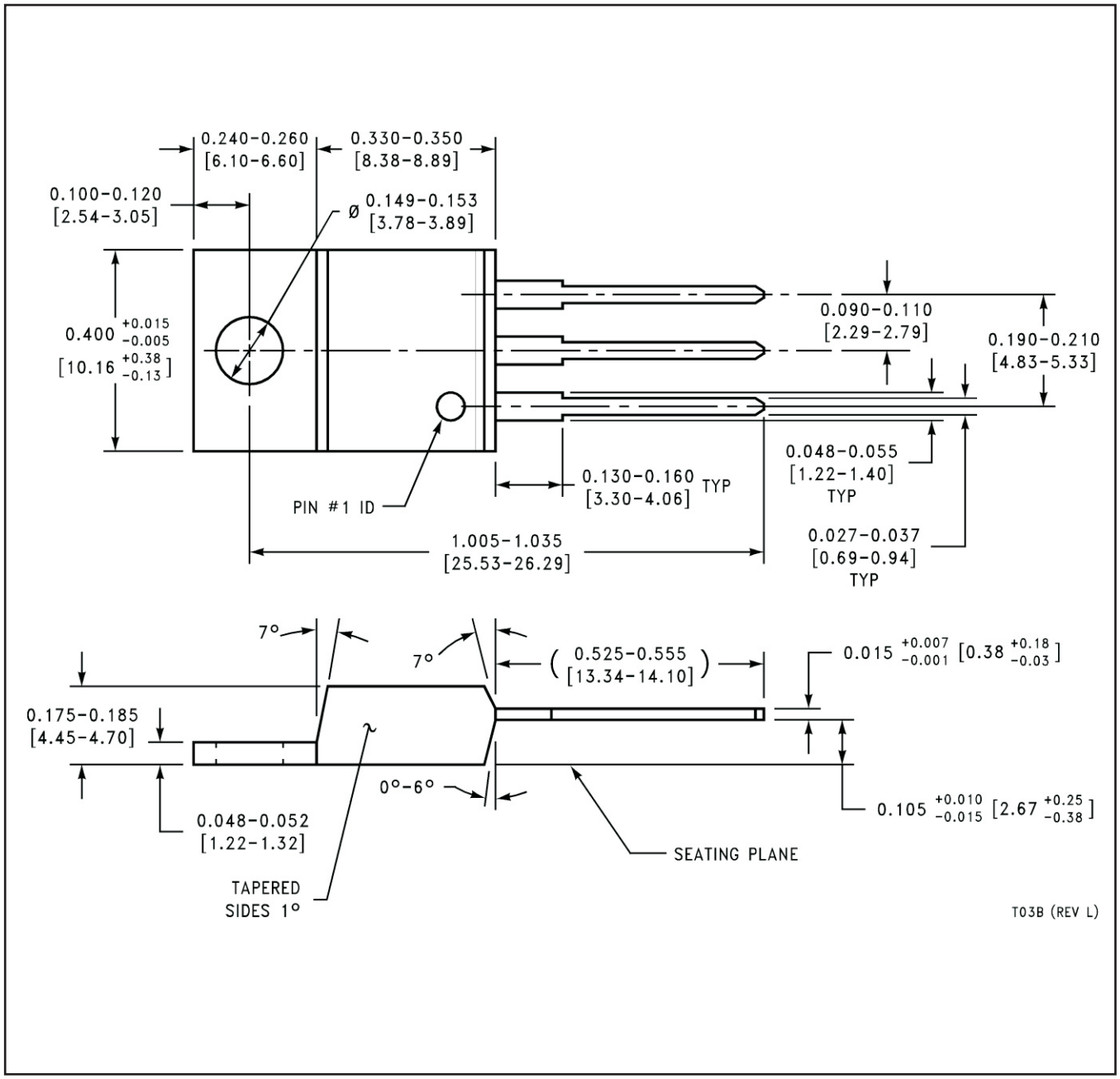
0.240-0.260
[6.10-6.60]
0.330-0.350
[8.38-8.89]
0.100-0.120
[2.54-3.05]
Ø 0.149-0.153
[3.78-3.89]
0.400 +0.015 -0.005
[10.16 +0.38 -0.13]
0.090-0.110
[2.29-2.79]
0.190-0.210
[4.83-5.33]
0.048-0.055
[1.22-1.40]
TYP
0.130-0.160 TYP
[3.30-4.06]
PIN #1 ID
1.005-1.035
[25.53-26.29]
0.027-0.037
[0.69-0.94]
TYP
7°
7°
(0.525-0.555)
[13.34-14.10]
0.015 +0.007 -0.001 [0.38 +0.18 -0.03]
0.175-0.185
[4.45-4.70]
0°-6°
0.105 +0.010 -0.015 [2.67 +0.25 -0.38]
0.048-0.052
[1.22-1.32]
SEATING PLANE
TAPERED
SIDES 1°
T03B (REV L)

NDP0003B

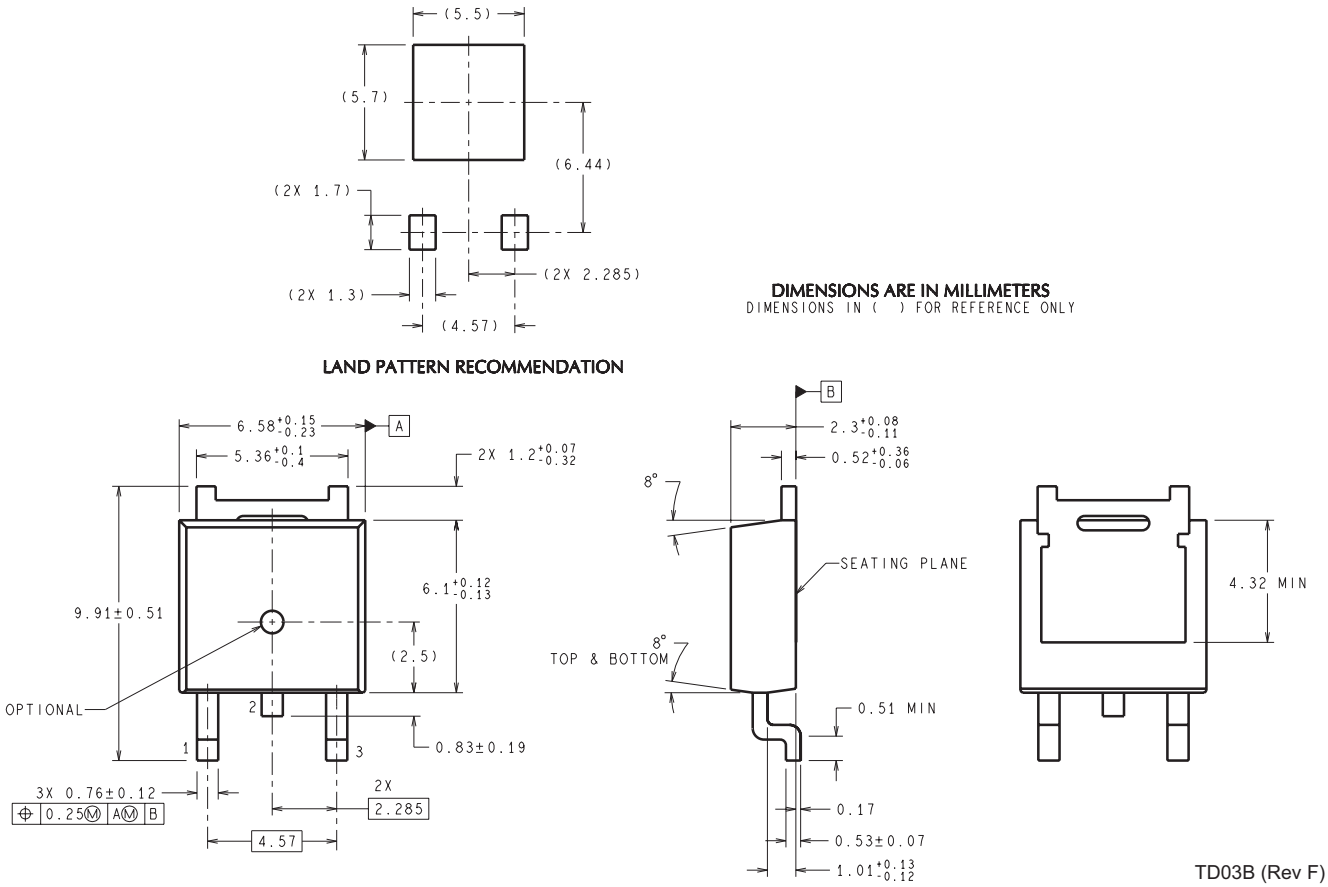
(5.5)
(5.7)
(6.44)
(2X 1.7)
(2X 2.285)
(2X 1.3)
(4.57)
LAND PATTERN RECOMMENDATION
DIMENSIONS ARE IN MILLIMETERS
DIMENSIONS IN ( ) FOR REFERENCE ONLY
6.58 +0.15 -0.23
A
5.36 +0.1 -0.4
2X 1.2 +0.07 -0.32
9.91±0.51
6.1 +0.12 -0.13
(2.5)
OPTIONAL
0.83±0.19
3X 0.76±0.12
0.25 M A M B
2X
2.285
4.57
B
2.3 +0.08 -0.11
0.52 +0.36 -0.06
8°
SEATING PLANE
TOP & BOTTOM
0.51 MIN
0.17
0.53±0.07
1.01 +0.13 -0.12
4.32 MIN
TD03B (Rev F)

DCY (R-PDSO-G4) **PLASTIC SMALL-OUTLINE**

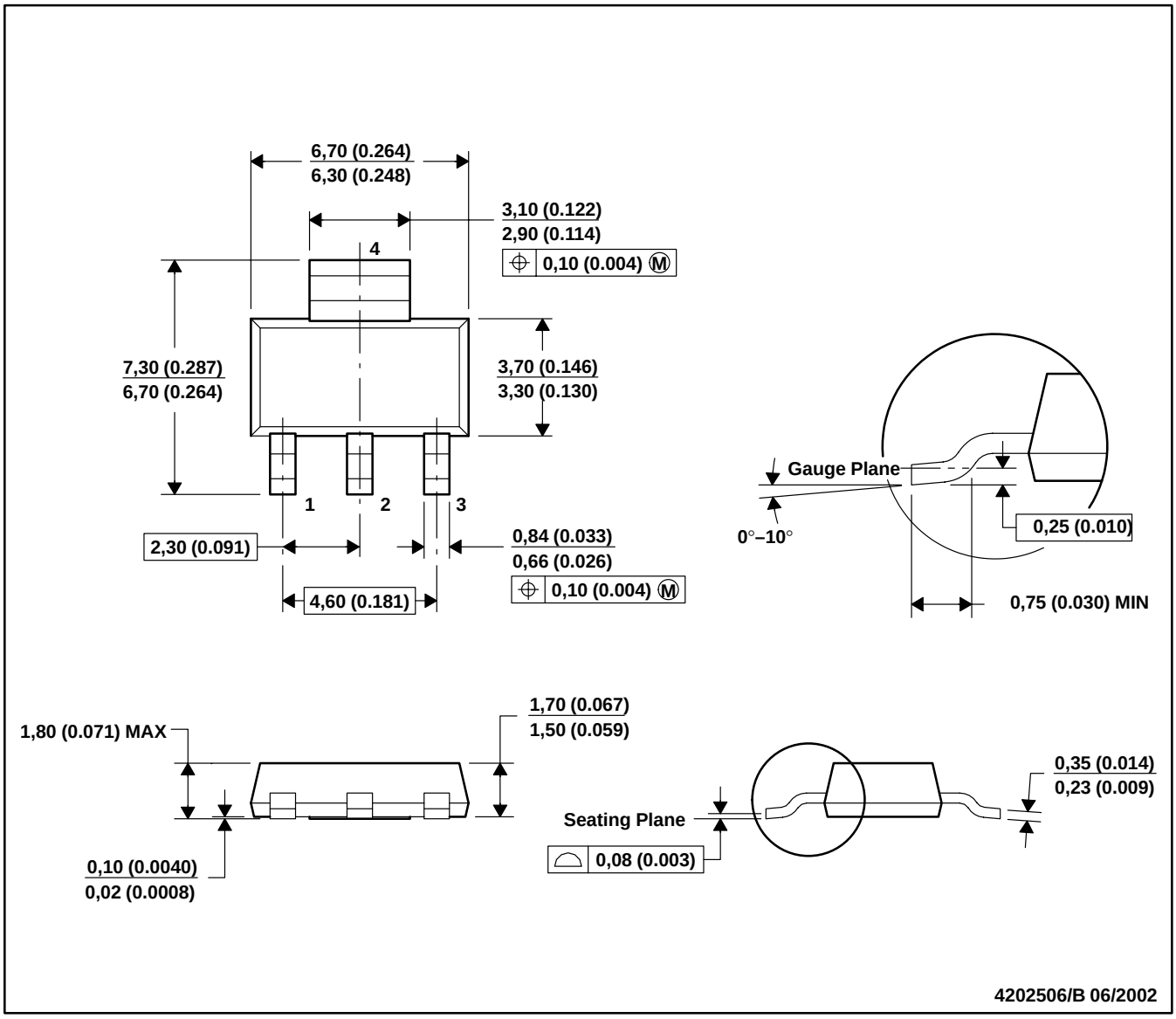

NOTES: A. All linear dimensions are in millimeters (inches).
B. This drawing is subject to change without notice.
C. Body dimensions do not include mold flash or protrusion.
D. Falls within JEDEC TO-261 Variation AA.

NGN0008A

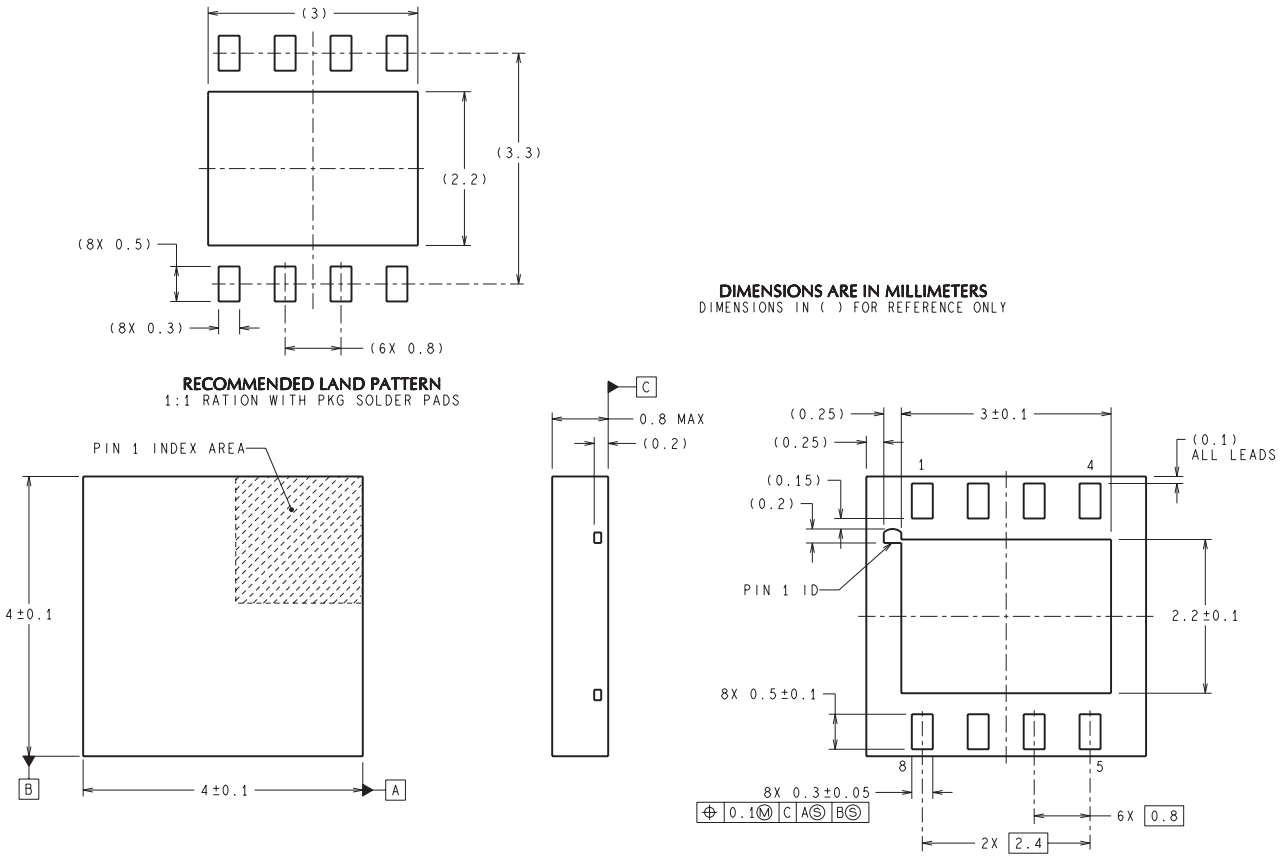

LDC08A (Rev B)

KTT0003B

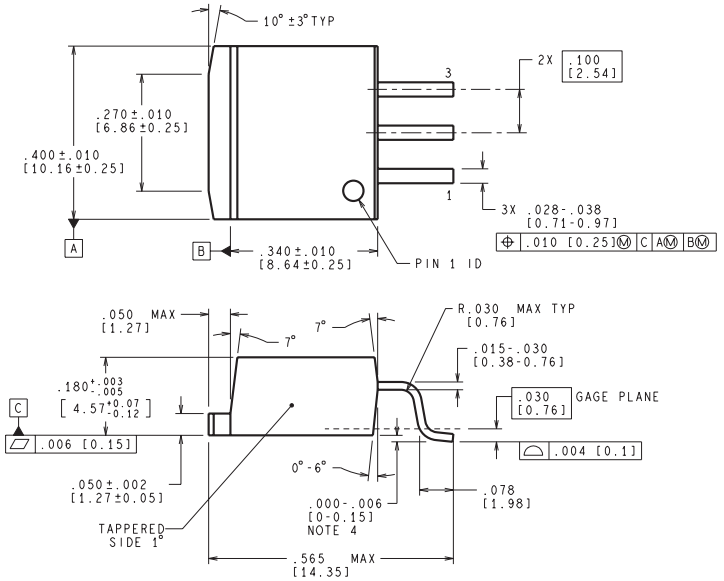

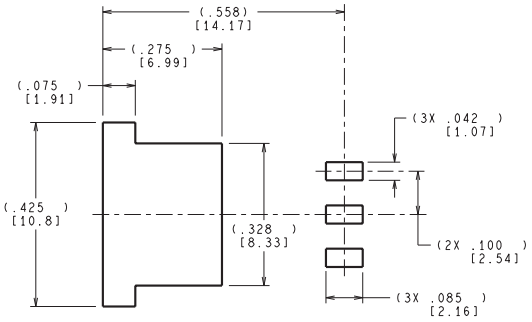

LAND PATTERN RECOMMENDATION

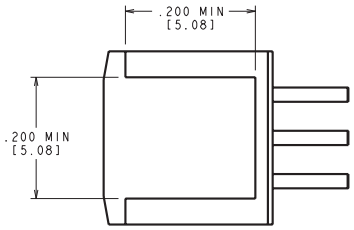

BOTTOM SIDE OF PACKAGE

CONTROLLING DIMENSION IS INCH
VALUES IN [ ] ARE MILLIMETERS
DIMENSIONS IN ( ) FOR REFERENCE ONLY

TS3B (Rev F)

IMPORTANT NOTICE

Texas Instruments Incorporated and its subsidiaries (TI) reserve the right to make corrections, enhancements, improvements and other changes to its semiconductor products and services per JESD46, latest issue, and to discontinue any product or service per JESD48, latest issue. Buyers should obtain the latest relevant information before placing orders and should verify that such information is current and complete. All semiconductor products (also referred to herein as “components”) are sold subject to TI’s terms and conditions of sale supplied at the time of order acknowledgment.

TI warrants performance of its components to the specifications applicable at the time of sale, in accordance with the warranty in TI’s terms and conditions of sale of semiconductor products. Testing and other quality control techniques are used to the extent TI deems necessary to support this warranty. Except where mandated by applicable law, testing of all parameters of each component is not necessarily performed.

TI assumes no liability for applications assistance or the design of Buyers’ products. Buyers are responsible for their products and applications using TI components. To minimize the risks associated with Buyers’ products and applications, Buyers should provide adequate design and operating safeguards.

TI does not warrant or represent that any license, either express or implied, is granted under any patent right, copyright, mask work right, or other intellectual property right relating to any combination, machine, or process in which TI components or services are used. Information published by TI regarding third-party products or services does not constitute a license to use such products or services or a warranty or endorsement thereof. Use of such information may require a license from a third party under the patents or other intellectual property of the third party, or a license from TI under the patents or other intellectual property of TI.

Reproduction of significant portions of TI information in TI data books or data sheets is permissible only if reproduction is without alteration and is accompanied by all associated warranties, conditions, limitations, and notices. TI is not responsible or liable for such altered documentation. Information of third parties may be subject to additional restrictions.

Resale of TI components or services with statements different from or beyond the parameters stated by TI for that component or service voids all express and any implied warranties for the associated TI component or service and is an unfair and deceptive business practice. TI is not responsible or liable for any such statements.

Buyer acknowledges and agrees that it is solely responsible for compliance with all legal, regulatory and safety-related requirements concerning its products, and any use of TI components in its applications, notwithstanding any applications-related information or support that may be provided by TI. Buyer represents and agrees that it has all the necessary expertise to create and implement safeguards which anticipate dangerous consequences of failures, monitor failures and their consequences, lessen the likelihood of failures that might cause harm and take appropriate remedial actions. Buyer will fully indemnify TI and its representatives against any damages arising out of the use of any TI components in safety-critical applications.

In some cases, TI components may be promoted specifically to facilitate safety-related applications. With such components, TI’s goal is to help enable customers to design and create their own end-product solutions that meet applicable functional safety standards and requirements. Nonetheless, such components are subject to these terms.

No TI components are authorized for use in FDA Class III (or similar life-critical medical equipment) unless authorized officers of the parties have executed a special agreement specifically governing such use.

Only those TI components which TI has specifically designated as military grade or “enhanced plastic” are designed and intended for use in military/aerospace applications or environments. Buyer acknowledges and agrees that any military or aerospace use of TI components which have ***not*** been so designated is solely at the Buyer's risk, and that Buyer is solely responsible for compliance with all legal and regulatory requirements in connection with such use.

TI has specifically designated certain components as meeting ISO/TS16949 requirements, mainly for automotive use. In any case of use of non-designated products, TI will not be responsible for any failure to meet ISO/TS16949.

Products		**Applications**	
Audio	www.ti.com/audio	Automotive and Transportation	www.ti.com/automotive
Amplifiers	amplifier.ti.com	Communications and Telecom	www.ti.com/communications
Data Converters	dataconverter.ti.com	Computers and Peripherals	www.ti.com/computers
DLP® Products	www.dlp.com	Consumer Electronics	www.ti.com/consumer-apps
DSP	dsp.ti.com	Energy and Lighting	www.ti.com/energy
Clocks and Timers	www.ti.com/clocks	Industrial	www.ti.com/industrial
Interface	interface.ti.com	Medical	www.ti.com/medical
Logic	logic.ti.com	Security	www.ti.com/security
Power Mgmt	power.ti.com	Space, Avionics and Defense	www.ti.com/space-avionics-defense
Microcontrollers	microcontroller.ti.com	Video and Imaging	www.ti.com/video
RFID	www.ti-rfid.com		
OMAP Applications Processors	www.ti.com/omap	**TI E2E Community**	e2e.ti.com
Wireless Connectivity	www.ti.com/wirelessconnectivity		

Mailing Address: Texas Instruments, Post Office Box 655303, Dallas, Texas 75265
Copyright © 2013, Texas Instruments Incorporated