1.2V - 8V, 3A PFET High Side Load Switch with Level Shift & Adjustable Slew Rate Control

Check for Samples: TPS27081A

FEATURES

- **Low ON Resistance, High Current PFET**
  - **R_{ON} = 32mΩ at V_{GS} = –4.5V**
  - **R_{ON} = 44mΩ at V_{GS} = –3.0V**
  - **R_{ON} = 82mΩ at V_{GS} = –1.8V**
  - **R_{ON} = 93mΩ at V_{GS} = –1.5V**
  - **R_{ON} = 155mΩ at V_{GS} = –1.2V**
- **Adjustable Turn-ON and Turn-OFF Slew Rate Control Through External R1, R2, and C1**
- **Supports a Wide Range of 1.2V up to 8V Supply Inputs**
- **Integrated NMOS for PFET Control**
- **NMOS ON/OFF Supports a Wide Range of 1.0V up to 8V Control Logic Interface**
- **Full ESD Protection (All Pins)**
  - **HBM 2kV, CDM 500V**
- **Ultra Low Leakage Current in Stand-by (Typ 100nA)**
- **Available in Tiny 6-pin Package**
  - **2.9mm x 2.8mm x 0.75mm Thin SOT-23 (DDC)**

APPLICATIONS

- **High Side Load Switch**
- **Inrush-current control**
- **Power Sequencing and Control**
- **Stand-by Power Isolation**
- **Portable Power Switch**

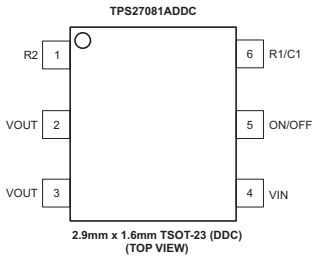

Figure 1. TPS27081A Packages

DESCRIPTION

The TPS27081A IC is a high side load switch that integrates a Power PFET and a Control NFET in a tiny package.

The TPS27081A features industry-standard ESD protection on all pins providing better ESD compatibility with other on-board components.

The TPS27081A level shifts ON/OFF logic signal to VIN levels and supports as low as 1.0V CPU or MCU logic to control higher voltage power supplies without requiring an external level-shifter.

Switching a large value output capacitor CL through a fast ON/OFF logic signal may result in an excessive inrush current. To control the load inrush current, connect a resistor R2 as shown in Figure 2. To further limit the inrush current add an external capacitor C1. To configure the TPS27081A to achieve a specific slew rate refer to the Application Information section.

A single pull-up resistor R1 is required in stand-by power switch applications that do not require inrush current control. In such applications connect the TPS27081A pin R2 to the system ground.

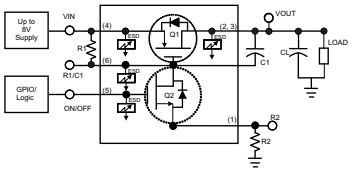

Figure 2. Simplified Block & Application Diagram

Component Table (Typical Application)

COMPONENT	DESCRIPTION
R1	Level Shift/Pull-up Resistor
R2	Optional(1)
C1	Optional(1)

(1) Required for load inrush current (slew rate) control

Please be aware that an important notice concerning availability, standard warranty, and use in critical applications of Texas Instruments semiconductor products and disclaimers thereto appears at the end of this data sheet.

PRODUCTION DATA information is current as of publication date. Products conform to specifications per the terms of the Texas Instruments standard warranty. Production processing does not necessarily include testing of all parameters.

Copyright © 2012–2013, Texas Instruments Incorporated

This integrated circuit can be damaged by ESD. Texas Instruments recommends that all integrated circuits be handled with appropriate precautions. Failure to observe proper handling and installation procedures can cause damage.

ESD damage can range from subtle performance degradation to complete device failure. Precision integrated circuits may be more susceptible to damage because very small parametric changes could cause the device not to meet its published specifications.

ORDERING INFORMATION(1)

T_A	PART NUMBER	PACKAGE		TOP-SIDE MARKING (2)
–40°C to 85°C	TPS27081ADDCR	6-Pin Thin SOT	Reel of 3000	AU_

(1) For the most current package and ordering information, see the Package Option Addendum at the end of this document, or see the TI website at www.ti.com.
(2) DDC: The actual top-side marking has one additional character that designates the wafer fab/assembly site.

ABSOLUTE MAXIMUM RATINGS(1)(2)

Specified at T_J = –40°C to 105°C unless otherwise noted.

			VALUE		UNIT
			MIN	MAX	
V_{INmax}, V_{OUTmax}	V_{IN}, V_{OUT} pin Maximum Voltage with reference to pin R2		–0.1	8	V
$V_{ON/OFF}$	ON/OFF Pin max Voltage with respect to Pin R2		–0.3	8	V
I_{Q1-ON}	Max Continuous Drain Current of Q1 at T_J = 105°C			3	A
	Max Pulsed Drain Current of Q1 (3) at T_J = 105°C			9.5	
P_D	Max power dissipation at T_A = 25°C, T_J = 150°C	6 Pin - TSOT, θ_{JA} = 105°C/W		1190	mW
All pins	ESD Rating – HBM			2000	V
	ESD Rating – CDM			500	
T_A	Operating free-air ambient temperature range		–40	85(4)	°C
T_{J-max}(5)	Operating virtual junction temperature			150	°C
T_{stg}	Storage temperature range		–65	150	°C

(1) Stresses beyond those listed under "Absolute Maximum Ratings" may cause permanent damage to the device. These are stress ratings only and functional operation of the device at these conditions is not implied. Exposure to absolute-maximum-rated conditions for extended periods may affect device reliability.
(2) Refer to TI's design support web page at www.ti.com/thermal for improving device thermal performance
(3) Pulse Width <300us, Duty Cycle <2%
(4) TJ-max limits and other related conditions apply. Refer to SOA charts, Figure 17 through Figure 21
(5) Operating at the absolute T_{J-max} of 150°C can affect reliability – for higher reliability it is recommended to ensure T_J <105°C

DISSIPATION RATINGS(1)(2)(3)

BOARD	PACKAGE	θ_{JC}	θ_{JA}(4)	T_A < 25°C	T_A = 70°C	T_A = 85°C	DERATING FACTOR ABOVE T_A = 25ºC
High-K(JEDEC 51-7)	6-Pin Thin SOT (DDC)	43°C/W	105°C/W	1190 mW	760 mW	619 mW	9.55 mW/°C

(1) Refer to TI's design support web page at www.ti.com/thermal for improving device thermal performance.
(2) Maximum dissipation values for retaining a maximum allowable device junction temperature of 150°C
(3) Package thermal data based on a 76x114x1.6mm, 4-layer board with 2-oz Copper on outer layers
(4) Operating at the absolute TJ-max of 150°C can affect reliability; TJ ≤ 105°C is recommended

Copyright © 2012–2013, Texas Instruments Incorporated

ELECTRICAL CHARACTERISTICS

Specified over the recommended junction temperature range TJ = -40°C to 105°C unless otherwise noted. Typical values specified at TA = TJ = 25°C.

PARAMETER		TEST CONDITIONS		MIN	TYP	MAX	UNIT
OFF CHARACTERISTICS							
BV_{IN}	Q1 drain-to-source breakdown voltage	$V_{ON/OFF}$ = 0 V, VGS(Q1) = 0V, ID(Q1) = 250 µA		-8			V
I_{LOAD} (1)	VIN Pin total leakage current	V_{IN}= 8V, $V_{ON/OFF}$ = 0V, R1 = 10k Ω	T_J = 25°C		0.15	0.75	µA
			T_J = 85°C (2)		5	20	
I_{LOAD} (1)	VIN Pin total leakage current	V_{IN}= 5V, $V_{ON/OFF}$ = 0V, R1 = 10k Ω	T_J = 25°C		0.05		µA
			T_J = 85°C (2)		2		
IF_{Q2}	Q2 drain-to-source leakage current	V_{IN}= 8V, $V_{ON/OFF}$ = 0V	T_J = 25°C		0.030	0.050	uA
			T_J = 85°C (2)		0.350	0.600	
IF_{Q2}	Q2 drain-to-source leakage current	V_{IN}= 5V, $V_{ON/OFF}$ = 0V	T_J = 25°C		0.025		µA
			T_J = 85°C (2)		0.250		
ON CHARACTERISTICS (3)							
VIL	ON/OFF pin low-level input voltage	V_{IN} = 5.0V, ID(Q1) < 2µA, R1 = 10kΩ, R2 = RL = 0Ω	T_J = 25°C			0.3	V
		V_{IN} = 5.0V, ID(Q1) < 20µA, R1 = 10kΩ, R2 = RL = 0Ω	T_J = 85°C (2)			0.2	
VIH	ON/OFF pin high-level input voltage	VIN=5.0V, R1=10kΩ		1.0			V
$R_{Q1(ON)}$	Q1 Channel ON resistance (4)	VGS = -4.5 V, ID(Q1) = 3.0 A			32	55	mΩ
		VGS = -3.0 V, ID(Q1) = 2.5 A			44	77	
		VGS = -2.5 V, ID(Q1) = 2.5 A			50	85	
		VGS = -1.8 V, ID(Q1) = 2.0 A			82	147	
		VGS = -1.5 V, ID(Q1) = 1.0 A			93	166	
		VGS = -1.2 V, ID(Q1) = 0.5 A			155	260	
$R_{Q2(ON)}$	Q2 Channel ON resistance	VGS = 4.5 V, ID(Q2) = 0.4 A			1.8	3	Ω
		VGS = 3.0 V, ID(Q2) = 0.3 A			2.3	6.2	
		VGS = 2.5 V, ID(Q2) = 0.2 A			2.6	6.1	
		VGS = 1.8 V, ID(Q2) = 0.1 A			3.8	10	
		VGS = 1.5 V, ID(Q2) = 0.05 A			4.4	8.5	
		VGS = 1.2 V, ID(Q2) = 0.03 A			6.25	13.5	
Q1 DRAIN-SOURCE DIODE PARAMETERS (3) (5)							
IF_{SD}	Source-drain diode peak forward current	VF_{SD} = 0.8 V, $V_{ON/OFF}$ = 0 V			1.0		A
VF_{SD}	Source-drain diode forward voltage	$V_{ON/OFF}$ = 0 V, IF_{SD} = –0.6A,				1.0	V

(1) Pull-up Resistor R1 dependent
(2) Guaranteed by design only
(3) Pulse width <300 µs, Duty Cycle <2.0%
(4) Refer to SOA charts for current rating
(5) Not rated for continuous current operation

Copyright © 2012–2013, Texas Instruments Incorporated

DEVICE INFORMATION

TPS27081ADDC

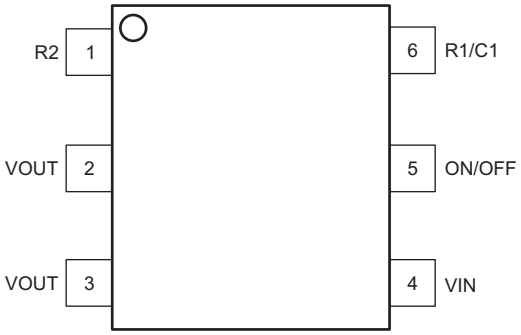

2.9mm x 1.6mm TSOT-23 (DDC)
(TOP VIEW)

TPS27081A PIN DESCRIPTION

PIN		DESCRIPTION
NAME	NUMBER	
R2	1	Source Terminal of NMOS (Q2) - Connect to system GND directly or through a slew rate control resistor
VOUT	2, 3	Drain Terminal of Power PFET (Q1) - Connect a slew control capacitor between pins VOUT and R1/C1
VIN	4	Source Terminal of Power PFET (Q1) - connect a pull-up resistor between the pins VIN/R1 and R1/C1
ON/OFF	5	Active high enable pin – when driven with a high impedance driver connect an external pull down resistor to GND
R1/C1	6	Gate Terminal of Power PFET (Q1)

Copyright © 2012–2013, Texas Instruments Incorporated

APPLICATION INFORMATION

The TPS27081A IC is a high side load switch that integrates a Power PFET and a Control NMOS in a tiny package. The TPS27081A internal components are rated for up to 8V supply and support up to 3A of load current. The TPS27081A can be used in a variety applications. Figure 3 below shows a general application of TPS27081A to control the load inrush current.

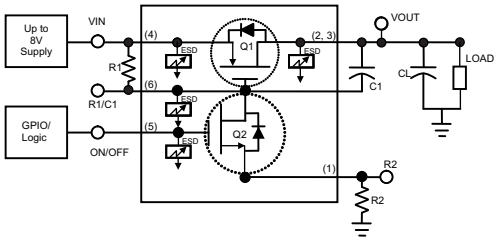

Figure 3. Typical Application Diagram

Configuring Q1 ON Resistance

The $V_{GS\text{-}Q1}$ Gate-Source voltage across the PMOS transistor Q1 sets its ON resistance $R_{Q1(ON)}$. Directly connecting the pin R2 to ground maximizes the ON state $V_{GS\text{-}Q1}$ and thus minimizes the VIN to VOUT voltage dropout. When a resistor R2 is installed to control the Turn-ON slew rate then $V_{GS\text{-}Q1}$ is given by:

$$VGS_{Q1} = -VIN \times \frac{R1}{R1 + R2} V$$

e.g. R1 = 10 x R2, VIN = 5V sets $V_{GS\text{-}Q1}$ = –4.5V (1)

Note: It is recommended to keep R1 > 10 x R2. Higher value of resistor R1 minimizes quiescient current when is PMOS is on, however may adversely impact off state leakage current. Refer to the ILoad parameter in the ELECTRICAL CHARACTERISTICS.

Configuring Turn-ON Slew Rate

Switching a large capacitive load CL instantaneously results in a load inrush current given by the following equation:

$$I_{inrush} = C_{load} \times \frac{dv}{dt} = C_{load} \times \frac{VOUT_{final} - VOUT_{initial}}{\text{Vout Slew Rate}} \quad (2)$$

An uncontrolled fast rising ON/OFF logic input may result in a high slew rate at the output resulting in a very high dv/dt thus leading to a higher inrush current. To control the inrush current connect a resistor R2 and a capacitor C1 as shown in the Electrical Characteristics Table. Use the following equation to configure the TPS27081A slew rate to a specific value. Refer to Table 1 for component values to configure TPS27081A to achieve standard slew rates.

$$t_{rise} = \frac{3.9 \times R2 \times C1}{VIN^{2/3}} \text{sec} \quad (3)$$

Where t_{rise} is the time delta starting from the ON/OFF signal's rising edge to charge up the load capacitor CL from 10% to 90% of VIN voltage.

Note: The t_{rise} equation is accurate to within +/-20% across full VIN range supported by TPS27081A. Ensure that R1 > 10 x R2.

Copyright © 2012–2013, Texas Instruments Incorporated

Table 1. Component Values for VOUT Rise Time

C1 (1)	Rise Time (µs) (2) (3)							
	R1=10kΩ, R2=1kΩ				R1=5.1kΩ, R2=510Ω			
	VIN = 7V	VIN = 5V	VIN = 3.3V	VIN = 1.2V	VIN = 7V	VIN = 5V	VIN = 3.3V	VIN = 1.2V
220pF	.253	.316	.416	.810	.129	.161	.212	.413
1000pF	1.15	1.44	1.89	3.68	.586	.732	.963	1.88
4700pF	5.4	6.75	8.88	17.3	2.76	3.44	4.53	8.83
0.18uF	207	258	340	663	106	132	173	338
0.27uF	310	388	510	994	158	198	260	507
0.33uF	379	474	623	1220	194	242	318	620
1uF	1150	1440	1890	3680	586	732	963	1880

(1) Typical ceramic capacitor values
(2) CLoad=10uF. Output rise time is independent of CLoad when CLoad >> C1
(3) Rise Time is 250ns for R2=0Ω and C1=CLoad=0F

Configuring Turn-OFF Delay

TPS27081A PMOS turn-off delay from the falling edge of ON/OFF logic signal depends upon the component values of resistor R1 & capacitor C1. Lower values of resistor R1 ensures quicker turn-off.

$t_{off} > 2 \times R1 \times C1$ sec

Low Voltage ON/OFF Interface

The VGS_{Q2} is set by the ON/OFF logic level. To turn ON, the transistor Q2 requires a VGS > 1.0V (Typical). For reliable operation apply ON/OFF logic that has the following VIH and VIL limits:

$VIH_{ON} > 1.0V + I_{Q2} \times R2$ V

$VIL_{OFF} < 0.2$ V

Minimizing I_{Q2} x R2 drop helps achieve a direct interface with a low voltage ON/OFF logic. To minimize I_{Q2} x R2 voltage drop select a high R1/R2 ratio. E.g. When VIN= 1.8V, selecting R1/R2 = 40 will require V_{IH} > 1.0 + 45mV and thus allowing a 1.2V GPIO interface.

In applications where ON/OFF signal is not available connect ON/OFF pin to VIN. The TPS27081A will turn ON/OFF in sync with the input supply connected to VIN.

Note: Connect a pull down resistor between ON/OFF pin to GND when ON/OFF is driven by a high-impedance (tri-state) driver.

On-Chip Power Dissipation

Use the below equation to calculate TPS27081A on-chip power dissipation P_D:

$PD = ID_{Q1}^2 \times R_{Q1(ON)} + ID_{Q2}^2 \times R_{Q2(ON)}$

Where, ID_{Q1} and ID_{Q2} are the DC current flowing through the transistors Q1 and Q2 respectively. Refer to the ELECTRICAL CHARACTERISTICS table and/or Figure 10 through Figure 16 to estimate $R_{Q1(ON)}$ and $R_{Q2(ON)}$ for various values of VGS_{Q1} and VGS_{Q2} respectively.

Note: MOS switches can get extremely hot when operated in saturation region. As a general guideline, to avoid transistors Q1 and Q2 going into saturation region set VGS > VT +VDS. E.g. VGS > 1.5V and VDS < 200mV ensures operation as a switch.

Copyright © 2012–2013, Texas Instruments Incorporated

Thermal Reliability

For higher reliability it is recommended to limit TPS27081A IC's die junction temperature to less than 105°C. The IC junction temperature is directly proportional to the on-chip power dissipation. Use the following equation to calculate maximum on-chip power dissipation to achieve the maximum die junction temperature target:

$$PD_{(MAX)} = \left(T_{J(MAX)} - T_A\right) / \theta_{JA}$$

Where:

$T_{J(MAX)}$ is the target maximum junction temperature.

T_A is the operating ambient temperature.

$R_{\theta JA}$ is the package junction to ambient thermal resistance. (4)

Improving Package Thermal Performance

The package θ_{JA} value under standard conditions on a High-K board is listed in the DISSIPATION RATINGS. θ_{JA} value depends on the PC board layout. An external heat sink and/or a cooling mechanism, like a cold air fan, can help reduce θ_{JA} and thus improve device thermal capabilities. Refer to TI's design support web page at www.ti.com/thermal for a general guidance on improving device thermal performance.

APPLICATION EXAMPLES

TFT LCD Module Inrush Current Control

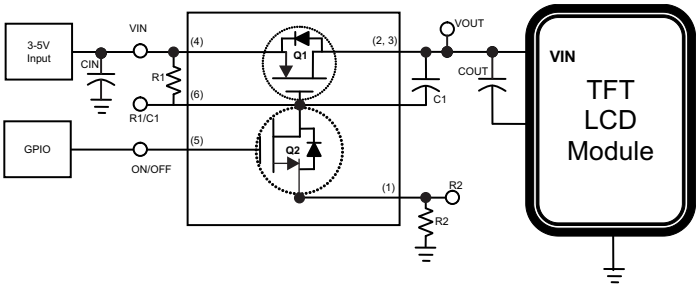

Figure 4. Inrush Current Control Using TPS27081A

LCD panels require inrush current control to prevent permanent system damages during turn-ON and turn-OFF events.

Standby Power Isolation

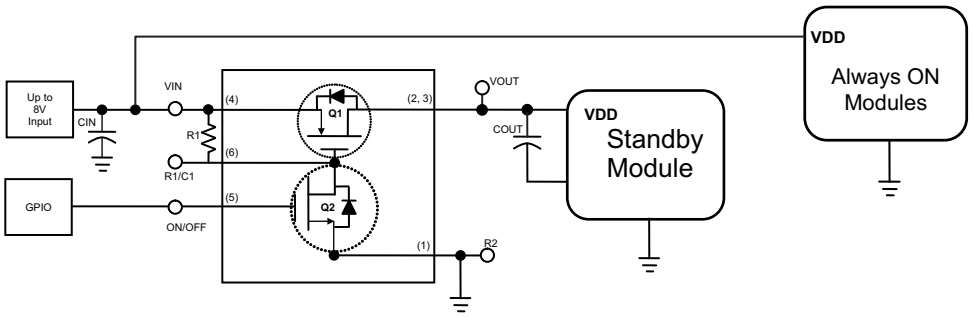

Figure 5. Standby Power Generation Using TPS27081A

Many applications have some always ON modules to support various core functions. However, some modules are selectively powered ON or OFF to save power and multiplexing of various on board resources. Such modules that are selectively turned ON or OFF require standby power generation. In such applications TPS27081A requires only a single pull-up resistor. In this configuration the VOUT voltage rise time is approximately 250ns when VIN = 5V.

Copyright © 2012–2013, Texas Instruments Incorporated

Boost Regulator with True Shutdown

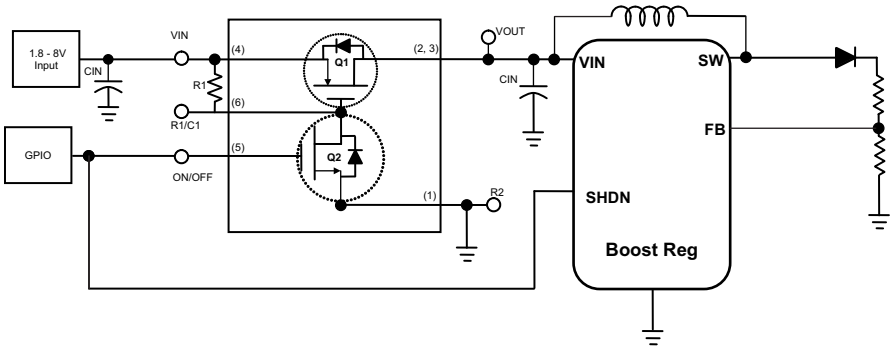

Figure 6. True Shutdown Using TPS27081A

The most common boost regulator topology provides a current leakage path through inductor and diode into the feedback resistor even when the regulator is shut down. Adding a TPS27081A in the input side power path prevents this leakage current and thus providing a true shutdown.

Single Module Multiple Power Supply Sequencing

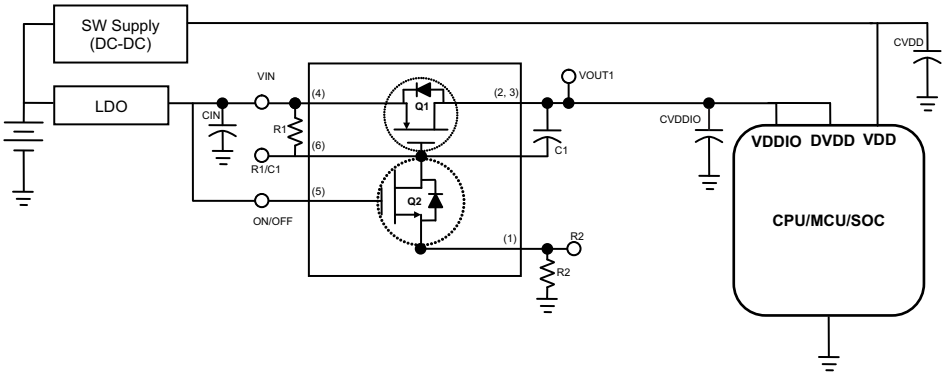

Figure 7. Power Sequencing Using TPS27081A, Example 1

Most modern SOCs and CPUs require multiple voltage inputs for its Analog, Digital cores and IO interfaces. These ICs require that these supplies be applied simultaneously or in a certain sequence. TPS27081A when configured, as shown in Figure 7, with the VOUT1 rise time adjusted appropriately through resistor R2 and capacitor C1, will delay the early arriving LDO output to match up with late arriving DC-DC output and thus achieving power sequencing.

Copyright © 2012–2013, Texas Instruments Incorporated

Multiple Modules Interdependent Power Supply Sequencing

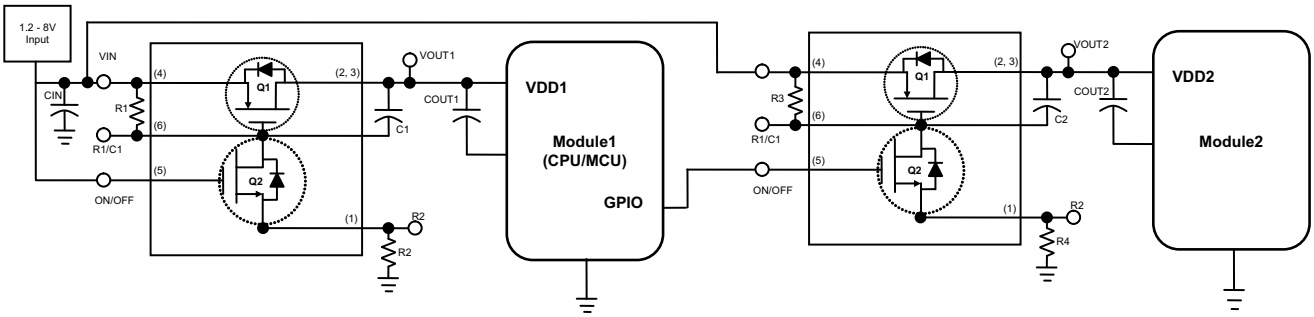

Figure 8. Power Sequencing Using TPS27081A, Example 2

For system integrity reasons a certain power sequencing may be required among various modules. As shown in Figure 8, Module 2 will power up only after Module 1 is powered up and the Module 1 GPIO output is enabled to turn ON Module 2. TPS27081A when used as shown in Figure 8 will not only sequence the Module 2 power, but also it will help prevent inrush current into the power path of Module 1 and 2.

Multiple Modules Interdependent Supply Sequencing without a GPIO Input

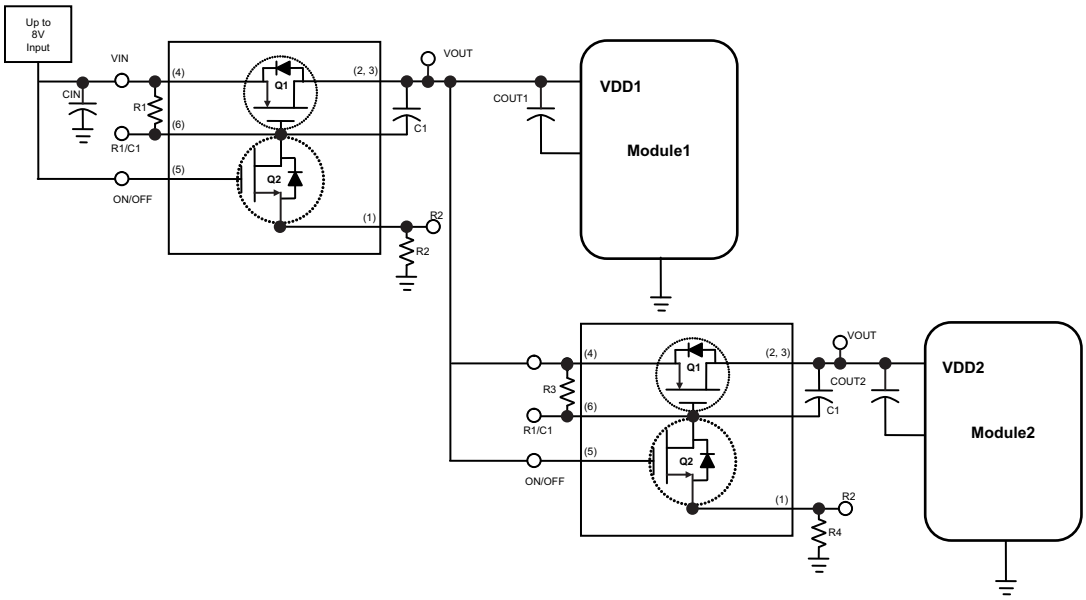

Figure 9. Power Sequencing using TPS27081A, Example 3

When a GPIO signal is not available connecting the ON/OFF pin of TPS27081 connected to Module 2 will power up Module 2 after Module 1, when resistor R4 and capacitor C1 are chosen appropriately. The two TPS27081A in this configuration will also control load inrush current.

Copyright © 2012–2013, Texas Instruments Incorporated

TPS27081A THIN SOT$_{(DDC)}$ SPECIFIC PACKAGE DIMENSIONS

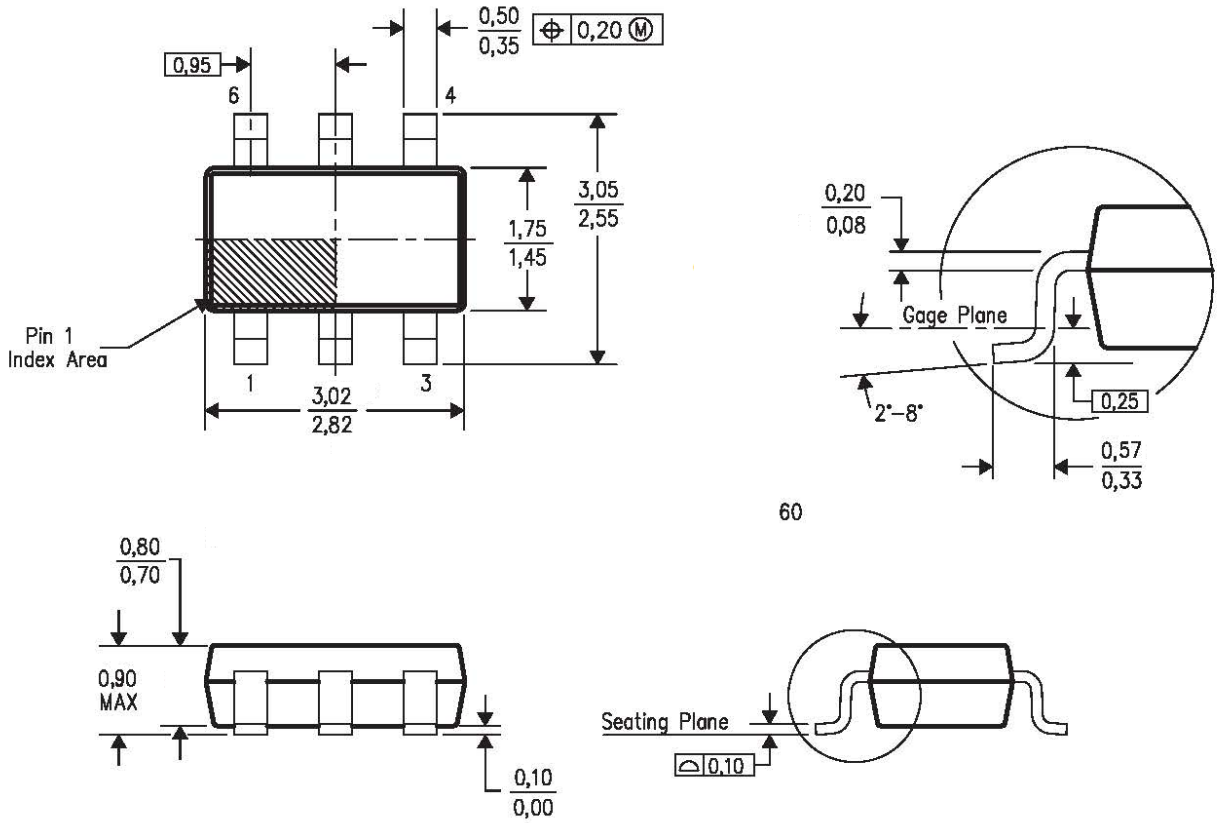

NOTES:

- All linear dimensions are in millimeters.
- Body dimensions do not include mold flash or protrusion.
- Falls within JEDEC MO-193 variation AA (6 pin).

TYPICAL CHARACTERISTICS

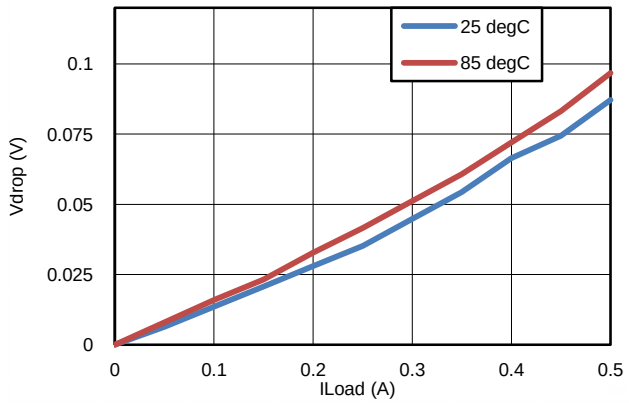

Figure 10. Vdrop vs IL; VGS_{Q1}=-1.2V

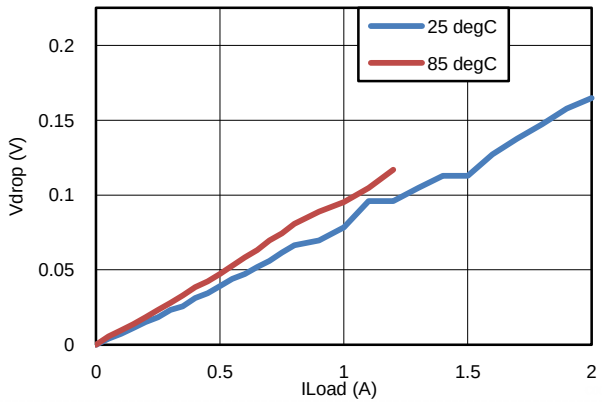

Figure 11. Vdrop vs IL; VGS_{Q1}=-1.8V

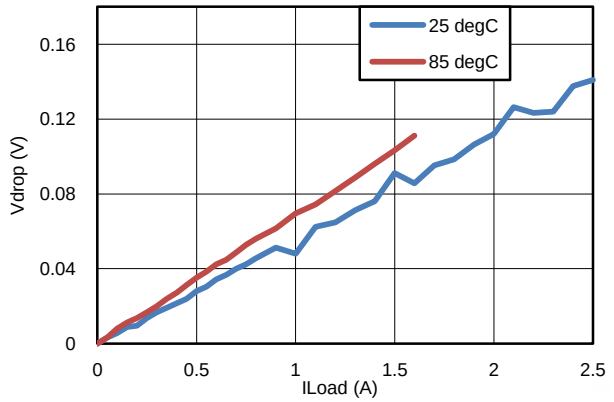

Figure 12. Vdrop vs IL; VGS_{Q1}=-2.5V

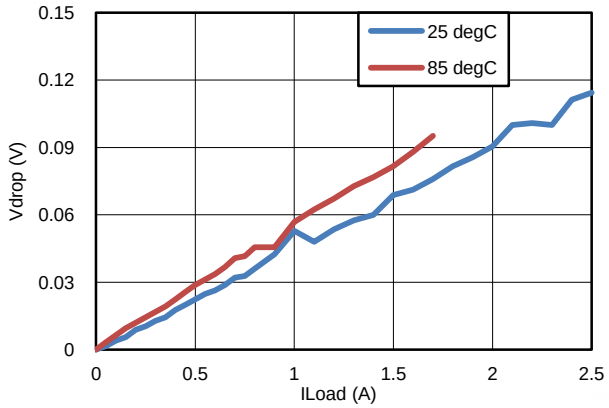

Figure 13. Vdrop vs IL; VGS_{Q1}=-3.3V

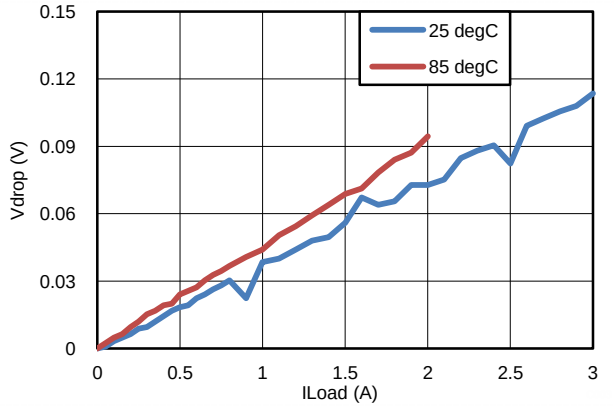

Figure 14. Vdrop vs IL; VGS_{Q1}=-4.5V

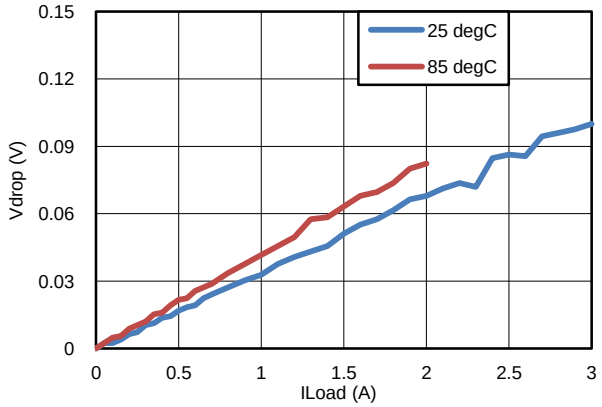

Figure 15. Vdrop vs IL; VGS_{Q1}=-5.5V

Copyright © 2012–2013, Texas Instruments Incorporated

TYPICAL CHARACTERISTICS (continued)

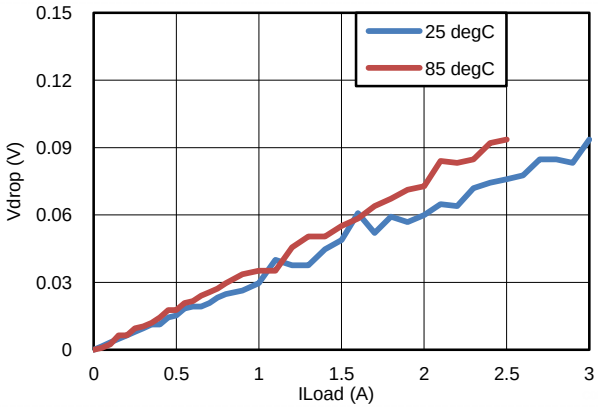

Figure 16. Vdrop vs IL; VGS_{Q1}=-7V

PFET Q1 Minimum Safe Operating Area (SOA)

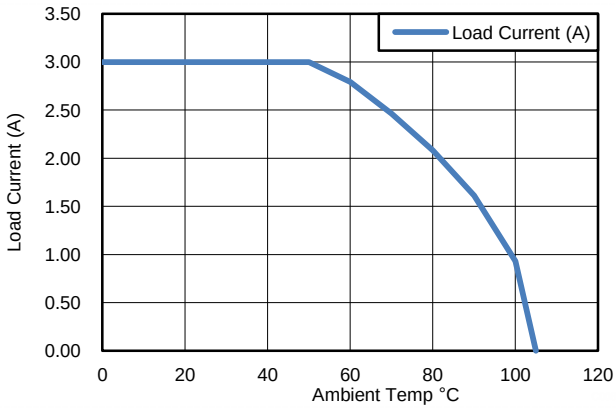

Figure 17. Q1 SOA @ VGS_Q1 = -4.5V

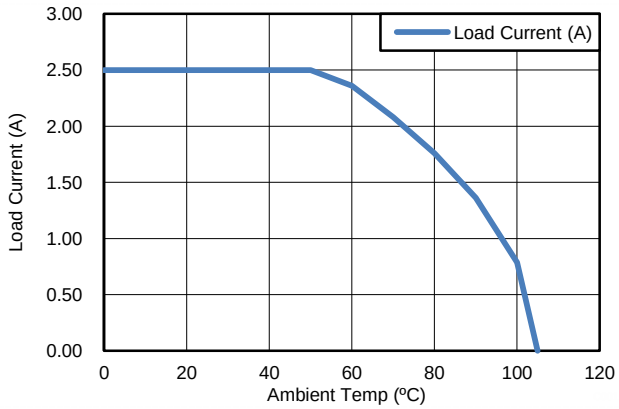

Figure 18. Q1 SOA @ VGS_Q1 = -3.0V

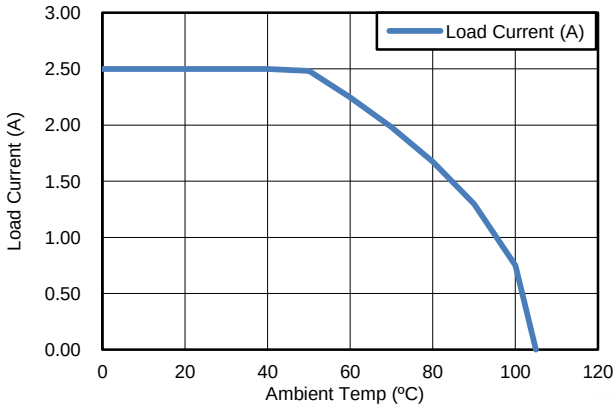

Figure 19. Q1 SOA @ VGS_Q1 = -2.5V

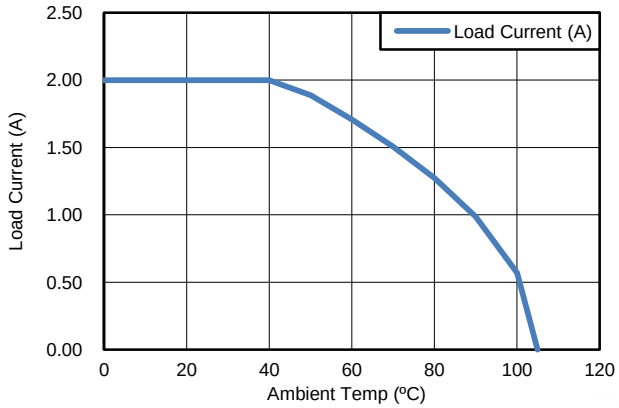

Figure 20. Q1 SOA @ VGS_Q1 = -1.8V

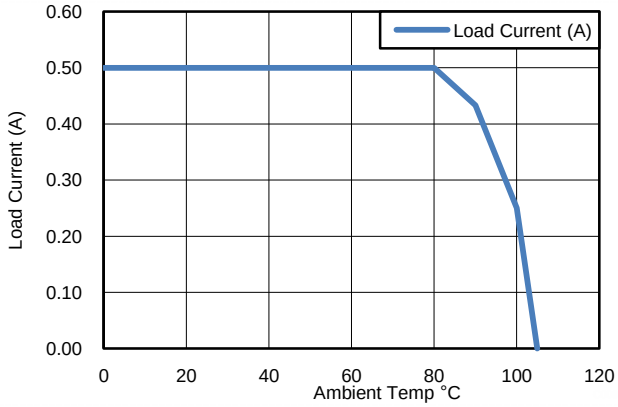

Figure 21. Q1 SOA @ VGS_Q1 = -1.2V

Copyright © 2012–2013, Texas Instruments Incorporated

REVISION HISTORY

Changes from Revision B (September 2012) to Revision C	Page
• Removed DRV package preview from datasheet.	1

Changes from Revision C (January 2013) to Revision D	Page
• Updated wording in document.	1

PACKAGING INFORMATION

Orderable Device	Status (1)	Package Type	Package Drawing	Pins	Package Qty	Eco Plan (2)	Lead/Ball Finish	MSL Peak Temp (3)	Op Temp (°C)	Top-Side Markings (4)	Samples
TPS27081ADDCR	ACTIVE	SOT	DDC	6	3000	Green (RoHS & no Sb/Br)	CU SN	Level-1-260C-UNLIM	-40 to 85	AUA	Samples

(1) The marketing status values are defined as follows:
ACTIVE: Product device recommended for new designs.
LIFEBUY: TI has announced that the device will be discontinued, and a lifetime-buy period is in effect.
NRND: Not recommended for new designs. Device is in production to support existing customers, but TI does not recommend using this part in a new design.
PREVIEW: Device has been announced but is not in production. Samples may or may not be available.
OBSOLETE: TI has discontinued the production of the device.

(2) Eco Plan - The planned eco-friendly classification: Pb-Free (RoHS), Pb-Free (RoHS Exempt), or Green (RoHS & no Sb/Br) - please check http://www.ti.com/productcontent for the latest availability information and additional product content details.
TBD: The Pb-Free/Green conversion plan has not been defined.
Pb-Free (RoHS): TI's terms "Lead-Free" or "Pb-Free" mean semiconductor products that are compatible with the current RoHS requirements for all 6 substances, including the requirement that lead not exceed 0.1% by weight in homogeneous materials. Where designed to be soldered at high temperatures, TI Pb-Free products are suitable for use in specified lead-free processes.
Pb-Free (RoHS Exempt): This component has a RoHS exemption for either 1) lead-based flip-chip solder bumps used between the die and package, or 2) lead-based die adhesive used between the die and leadframe. The component is otherwise considered Pb-Free (RoHS compatible) as defined above.
Green (RoHS & no Sb/Br): TI defines "Green" to mean Pb-Free (RoHS compatible), and free of Bromine (Br) and Antimony (Sb) based flame retardants (Br or Sb do not exceed 0.1% by weight in homogeneous material)

(3) MSL, Peak Temp. -- The Moisture Sensitivity Level rating according to the JEDEC industry standard classifications, and peak solder temperature.

(4) Multiple Top-Side Markings will be inside parentheses. Only one Top-Side Marking contained in parentheses and separated by a "~" will appear on a device. If a line is indented then it is a continuation of the previous line and the two combined represent the entire Top-Side Marking for that device.

Important Information and Disclaimer: The information provided on this page represents TI's knowledge and belief as of the date that it is provided. TI bases its knowledge and belief on information provided by third parties, and makes no representation or warranty as to the accuracy of such information. Efforts are underway to better integrate information from third parties. TI has taken and continues to take reasonable steps to provide representative and accurate information but may not have conducted destructive testing or chemical analysis on incoming materials and chemicals. TI and TI suppliers consider certain information to be proprietary, and thus CAS numbers and other limited information may not be available for release.

In no event shall TI's liability arising out of such information exceed the total purchase price of the TI part(s) at issue in this document sold by TI to Customer on an annual basis.

TAPE AND REEL INFORMATION

REEL DIMENSIONS

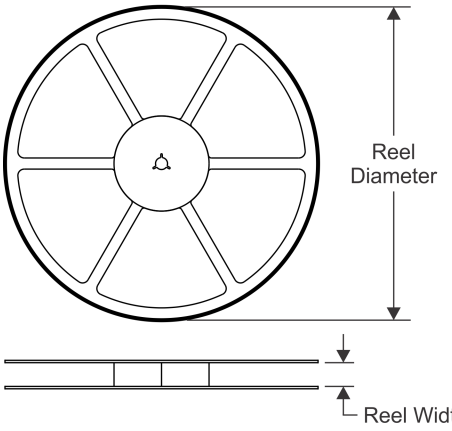

TAPE DIMENSIONS

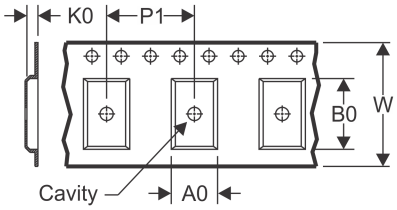

A0	Dimension designed to accommodate the component width
B0	Dimension designed to accommodate the component length
K0	Dimension designed to accommodate the component thickness
W	Overall width of the carrier tape
P1	Pitch between successive cavity centers

QUADRANT ASSIGNMENTS FOR PIN 1 ORIENTATION IN TAPE

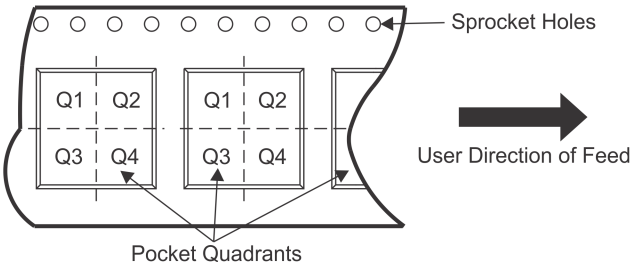

*All dimensions are nominal

Device	Package Type	Package Drawing	Pins	SPQ	Reel Diameter (mm)	Reel Width W1 (mm)	A0 (mm)	B0 (mm)	K0 (mm)	P1 (mm)	W (mm)	Pin1 Quadrant
TPS27081ADDCR	SOT	DDC	6	3000	180.0	9.5	3.17	3.1	1.1	4.0	8.0	Q3

TAPE AND REEL BOX DIMENSIONS

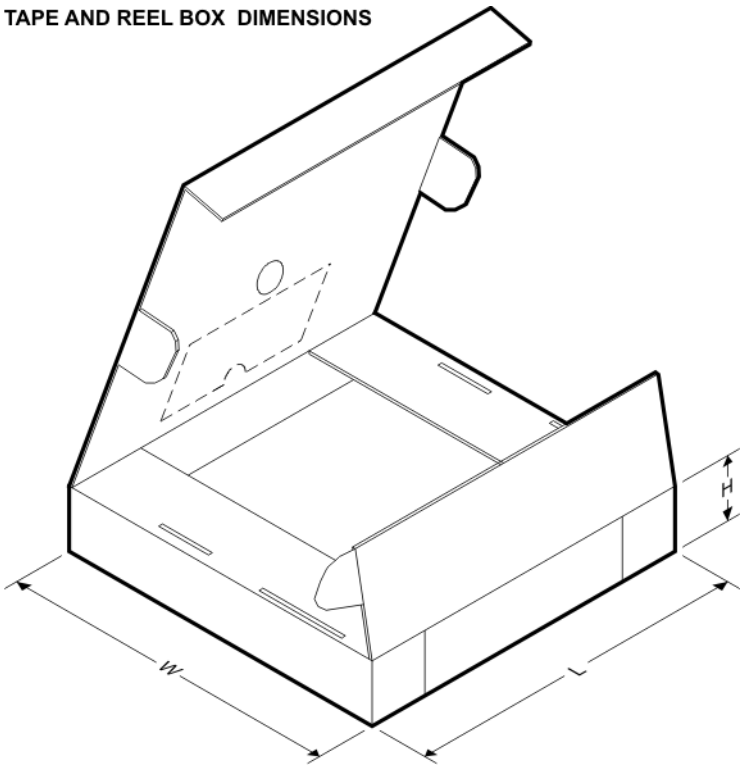

*All dimensions are nominal

Device	Package Type	Package Drawing	Pins	SPQ	Length (mm)	Width (mm)	Height (mm)
TPS27081ADDCR	SOT	DDC	6	3000	180.0	180.0	30.0

DDC (R–PDSO–G6) PLASTIC SMALL–OUTLINE

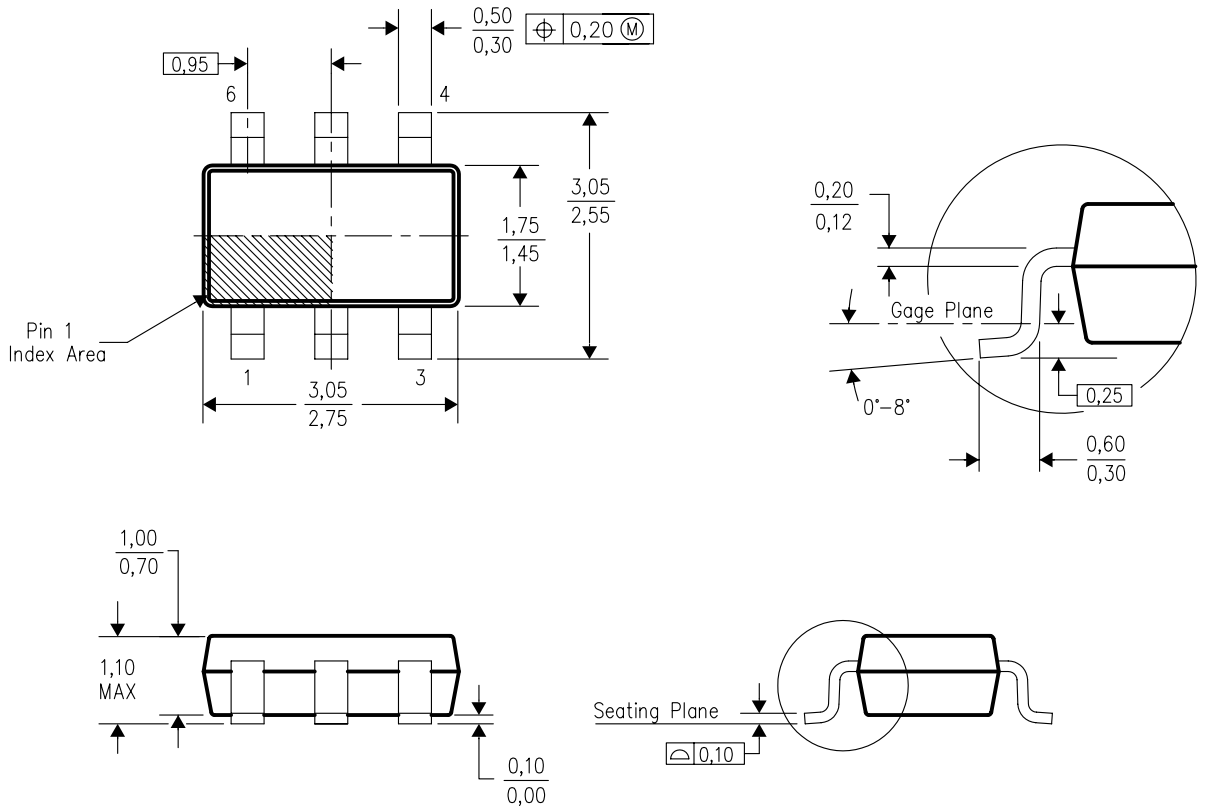

4204403–3/E 06/05

NOTES:
A. All linear dimensions are in millimeters.
B. This drawing is subject to change without notice.
C. Body dimensions do not include mold flash or protrusion.
D. Falls within JEDEC MO–193 variation AA (6 pin).

IMPORTANT NOTICE

Texas Instruments Incorporated and its subsidiaries (TI) reserve the right to make corrections, enhancements, improvements and other changes to its semiconductor products and services per JESD46, latest issue, and to discontinue any product or service per JESD48, latest issue. Buyers should obtain the latest relevant information before placing orders and should verify that such information is current and complete. All semiconductor products (also referred to herein as “components”) are sold subject to TI’s terms and conditions of sale supplied at the time of order acknowledgment.

TI warrants performance of its components to the specifications applicable at the time of sale, in accordance with the warranty in TI’s terms and conditions of sale of semiconductor products. Testing and other quality control techniques are used to the extent TI deems necessary to support this warranty. Except where mandated by applicable law, testing of all parameters of each component is not necessarily performed.

TI assumes no liability for applications assistance or the design of Buyers’ products. Buyers are responsible for their products and applications using TI components. To minimize the risks associated with Buyers’ products and applications, Buyers should provide adequate design and operating safeguards.

TI does not warrant or represent that any license, either express or implied, is granted under any patent right, copyright, mask work right, or other intellectual property right relating to any combination, machine, or process in which TI components or services are used. Information published by TI regarding third-party products or services does not constitute a license to use such products or services or a warranty or endorsement thereof. Use of such information may require a license from a third party under the patents or other intellectual property of the third party, or a license from TI under the patents or other intellectual property of TI.

Reproduction of significant portions of TI information in TI data books or data sheets is permissible only if reproduction is without alteration and is accompanied by all associated warranties, conditions, limitations, and notices. TI is not responsible or liable for such altered documentation. Information of third parties may be subject to additional restrictions.

Resale of TI components or services with statements different from or beyond the parameters stated by TI for that component or service voids all express and any implied warranties for the associated TI component or service and is an unfair and deceptive business practice. TI is not responsible or liable for any such statements.

Buyer acknowledges and agrees that it is solely responsible for compliance with all legal, regulatory and safety-related requirements concerning its products, and any use of TI components in its applications, notwithstanding any applications-related information or support that may be provided by TI. Buyer represents and agrees that it has all the necessary expertise to create and implement safeguards which anticipate dangerous consequences of failures, monitor failures and their consequences, lessen the likelihood of failures that might cause harm and take appropriate remedial actions. Buyer will fully indemnify TI and its representatives against any damages arising out of the use of any TI components in safety-critical applications.

In some cases, TI components may be promoted specifically to facilitate safety-related applications. With such components, TI’s goal is to help enable customers to design and create their own end-product solutions that meet applicable functional safety standards and requirements. Nonetheless, such components are subject to these terms.

No TI components are authorized for use in FDA Class III (or similar life-critical medical equipment) unless authorized officers of the parties have executed a special agreement specifically governing such use.

Only those TI components which TI has specifically designated as military grade or “enhanced plastic” are designed and intended for use in military/aerospace applications or environments. Buyer acknowledges and agrees that any military or aerospace use of TI components which have ***not*** been so designated is solely at the Buyer's risk, and that Buyer is solely responsible for compliance with all legal and regulatory requirements in connection with such use.

TI has specifically designated certain components as meeting ISO/TS16949 requirements, mainly for automotive use. In any case of use of non-designated products, TI will not be responsible for any failure to meet ISO/TS16949.

Products		**Applications**	
Audio	www.ti.com/audio	Automotive and Transportation	www.ti.com/automotive
Amplifiers	amplifier.ti.com	Communications and Telecom	www.ti.com/communications
Data Converters	dataconverter.ti.com	Computers and Peripherals	www.ti.com/computers
DLP® Products	www.dlp.com	Consumer Electronics	www.ti.com/consumer-apps
DSP	dsp.ti.com	Energy and Lighting	www.ti.com/energy
Clocks and Timers	www.ti.com/clocks	Industrial	www.ti.com/industrial
Interface	interface.ti.com	Medical	www.ti.com/medical
Logic	logic.ti.com	Security	www.ti.com/security
Power Mgmt	power.ti.com	Space, Avionics and Defense	www.ti.com/space-avionics-defense
Microcontrollers	microcontroller.ti.com	Video and Imaging	www.ti.com/video
RFID	www.ti-rfid.com		
OMAP Applications Processors	www.ti.com/omap	**TI E2E Community**	e2e.ti.com
Wireless Connectivity	www.ti.com/wirelessconnectivity		

Mailing Address: Texas Instruments, Post Office Box 655303, Dallas, Texas 75265
Copyright © 2013, Texas Instruments Incorporated