10/100BASE-T SINGLE PORT SURFACE MOUNT MAGNETICS

With Various Turns Ratios

Pulse
A TECHNITROL COMPANY

RoHS COMPLIANT

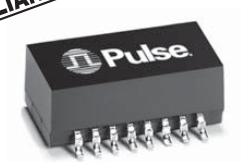

- RoHS peak reflow temperature rating: 245°C
- Meets IEEE 802.3 specification
- Compact footprint for use in the most space-restrictive applications

Electrical Specifications @ 25°C — Operating Temperature 0°C to 70°C

RoHS Compliant Part Number	Turns Ratio		Insertion Loss 100 kHz-100 MHz (dB MAX)	Return Loss (dB TYP)			Differential to Common Mode Rejection (dB TYP)			Crosstalk (dB TYP)			Hipot (Vrms MIN)
	TX	RX		30 MHz	60 MHz	80 MHz	30 MHz	50 MHz	100 MHz	30 MHz	60 MHz	100 MHz	
H1100NL[3a]	2:1	1:1	-1.1	-20	-14	-11.5	-42	-37	-33	-45	-40	-35	1500
H1101NL[3a]	1.25:1	1:1	-1.1	-20	-14	-11.5	-42	-37	-33	-45	-40	-35	1500
H1102NL[3a]	1:1	1:1	-1.1	-20	-14	-11.5	-42	-37	-33	-45	-40	-35	1500
H1121NL[3c]	1:1.414	1:1	-1.1	-18	-12	-11.5	-42	-37	-30	-45	-40	-35	1500
H1183NL[3a]	1:1	1:1	-1.0	-18	-14	-12	-40	-40	-40	-35	-35	-35	1500
H1199NL[3a]	1:1	1:1	-0.9	-18	-12	-11	-40	-35	-30	-45	-45	-37	1500
HX1188NL[1, 3a]	1:1	1:1	-1.0	-20	-14	-12	-42	-37	-32	-45	-40	-35	1500
HX1198 NL[1, 3a]	1:1	1:1	-1.0	-20	-14	-12	-42	-37	-32	-45	-40	-35	1500
H1302NL[3a]	1:1	1:1	-1.1	-16	-10	-10	-42	-37	-32	-35	-30	-30	1500

1. **Operating** temperature -40°C to +85°C
2. **For Tape & Reel** packaging, add a "T" suffix at the end of the part number when ordering, e.g. H1102NL**T**.
3. **MSL =** Moisture Sensitivity Level a=1 b=2 c=3 d=4

Mechanical

H11XXNL, H1121NL, *H1183NL, H1199NL, HX1188NL, HX1198NL, H1302NL

* For part number H1183NL, all dimensions are the same, except the height is .220" (5,59 mm).

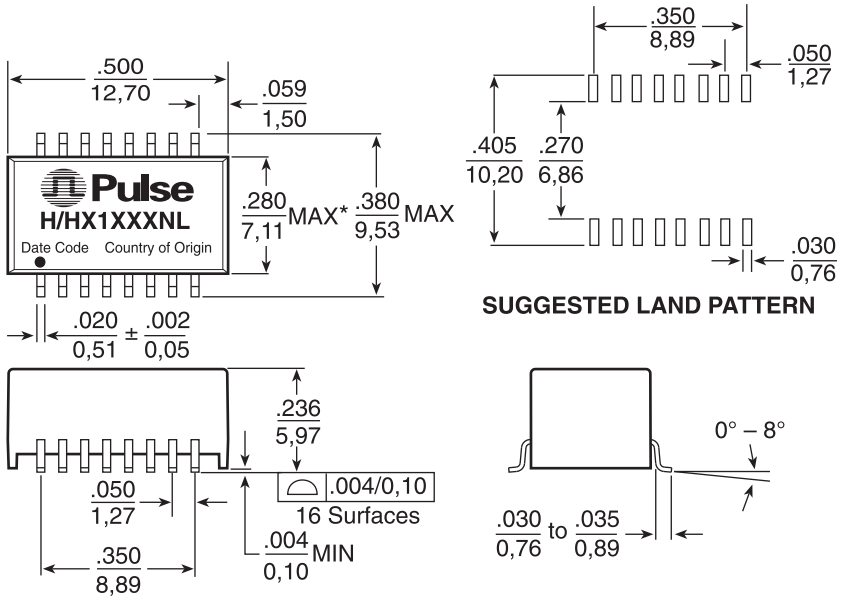

Dimensions: Inches / mm

Unless otherwise specified, all tolerances are ± .010 / 0,25

Weight . . . . . .0.9 grams
Tube 40/tube
Tape & Reel 600/reel

10/100BASE-T SINGLE PORT SURFACE MOUNT MAGNETICS

With Various Turns Ratios

Pulse
A TECHNITROL COMPANY

Schematics

H110XNL, H1121NL, HX1188NL

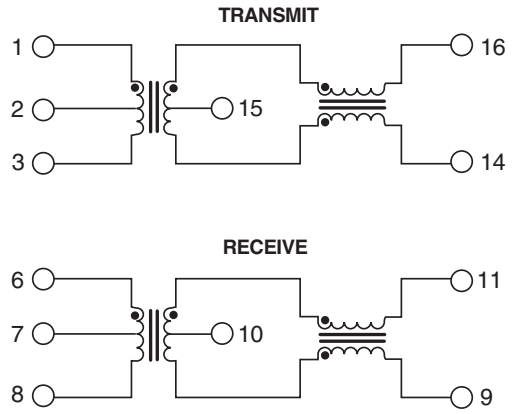

H1199NL

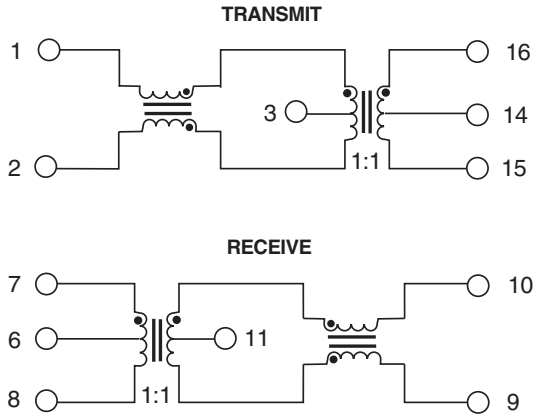

HX1198NL, H1183NL

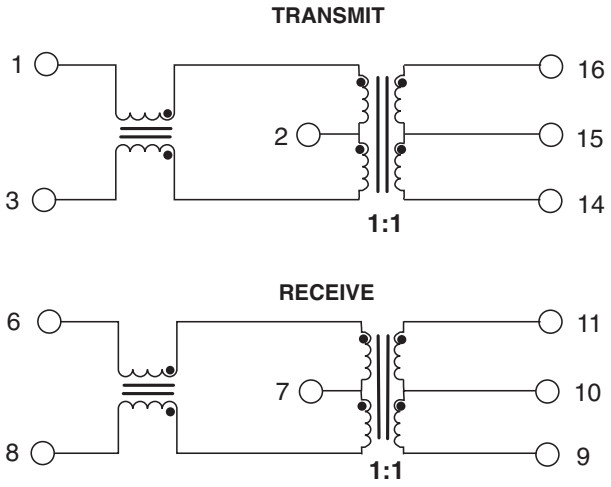

H1302NL

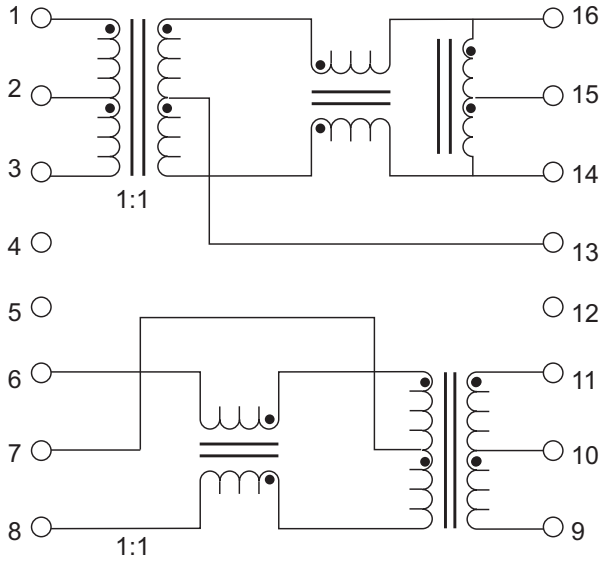

10/100BASE-T SINGLE PORT SURFACE MOUNT MAGNETICS

With Various Turns Ratios

Pulse
A TECHNITROL COMPANY

Typical Application Circuit

H1102NL

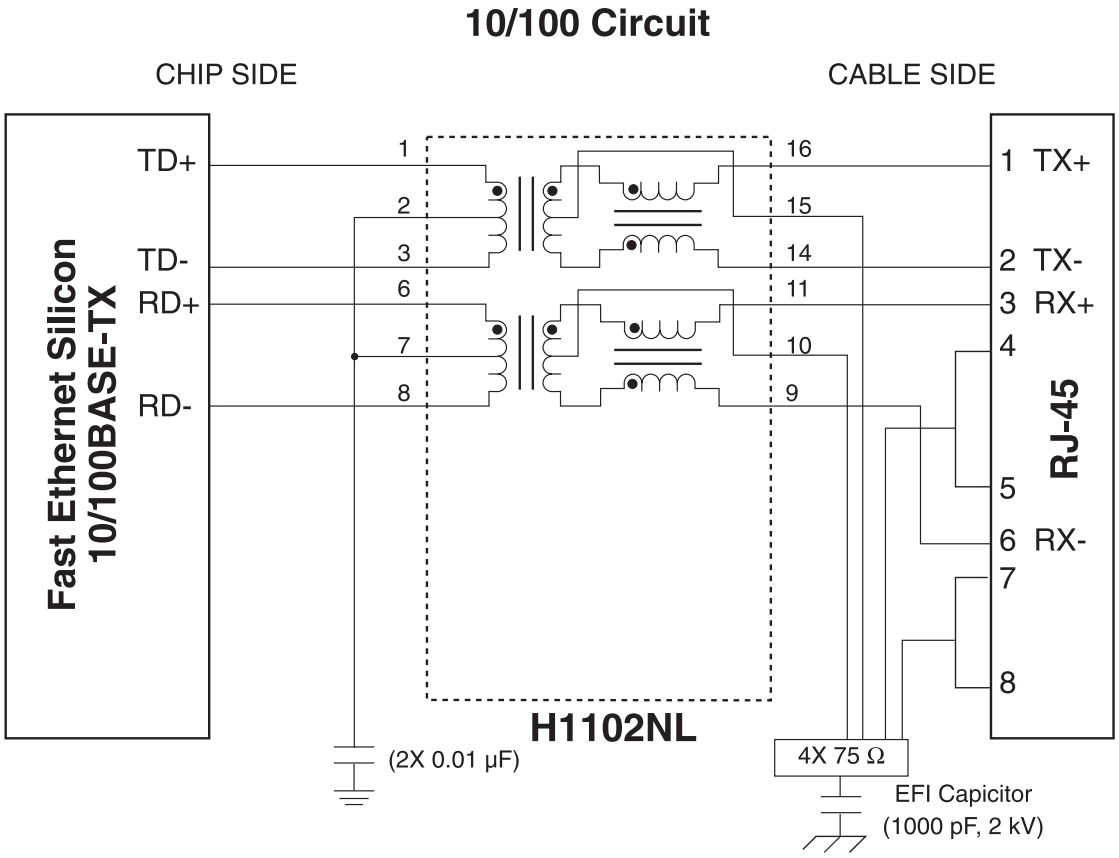

For More Information:

Pulse Worldwide Headquarters
12220 World Trade Dr.
San Diego, CA 92128
U.S.A.

www.pulseeng.com
Tel: 858 674 8100
Fax: 858 674 8262

Pulse Europe
Einsteinstrasse 1
D-71083 Herrenberg
Germany

Tel: 49 7032 7806 0
Fax: 49 7032 7806 135

Pulse China Headquarters
B402, Shenzhen Academy of Aerospace Technology Bldg.
10th Kejinan Rd.
Hwigh-Tech Zone
Nanshan District
Shenzen, PR China 518057
TEL: 86 755 33966678
FAX: 86 755 33966700

Pulse North China
Room 2704/2705
Super Ocean Finance Ctr.
2067 Yan An Rd. West
Shanghai 200336
China

Tel: 86 21 62787060
Fax: 86 2162786973

Pulse South Asia
135 Joo Seng Rd.
#03-02
PM Industrial Bldg.
Singapore 368363

TEL: 65 6287 8998
FAX: 65 6280 0080

Pulse North Asia
No. 26, Kao Ching Rd.
Yang Mei Chen
Taoyuan Hsien
Taiwan
R. O. C.

Tel: 886 3 4643715
Fax: 886 3 4641911

Performance warranty of products offered on this data sheet is limited to the parameters specified. Data is subject to change without notice. Other brand and product names mentioned herein may be trademarks or registered trademarks of their respective owners.

© Copyright, 2009. Pulse Engineering, Inc. All rights reserved.

Mouser Electronics

Authorized Distributor

Click to View Pricing, Inventory, Delivery & Lifecycle Information:

Pulse:

H1101 H1199 H1183 H1121 H1102 H1100 HX1188T HX1198 HX1188 H1102T H1302T H1183T H1121T HX1198T H1302 H1102NL H1102NLT HX1188NL HX1188NLT HX1198NL H1302NL H1101NL H1302NLT H1121NL H1183NLT H1183NL H1121NLT HX1198NLT H1100NL