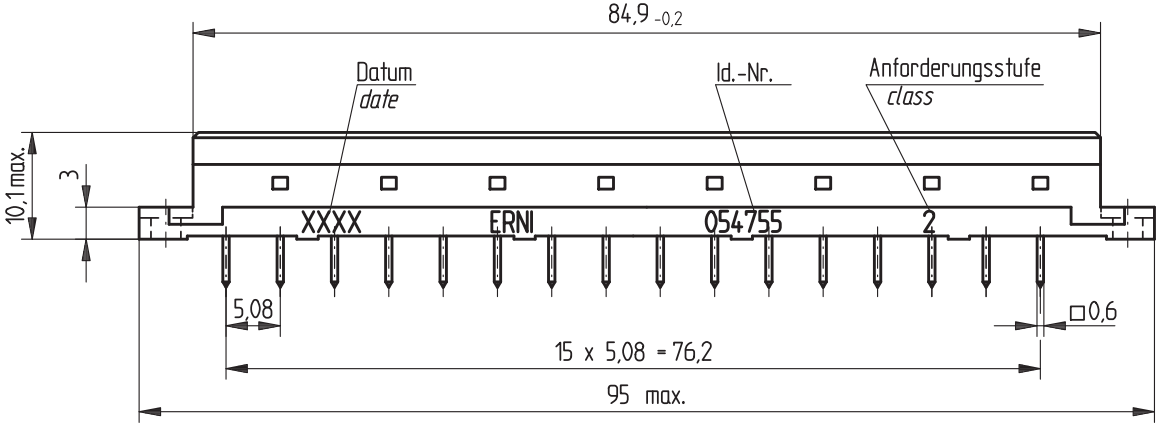

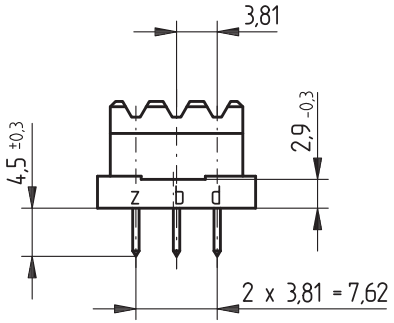

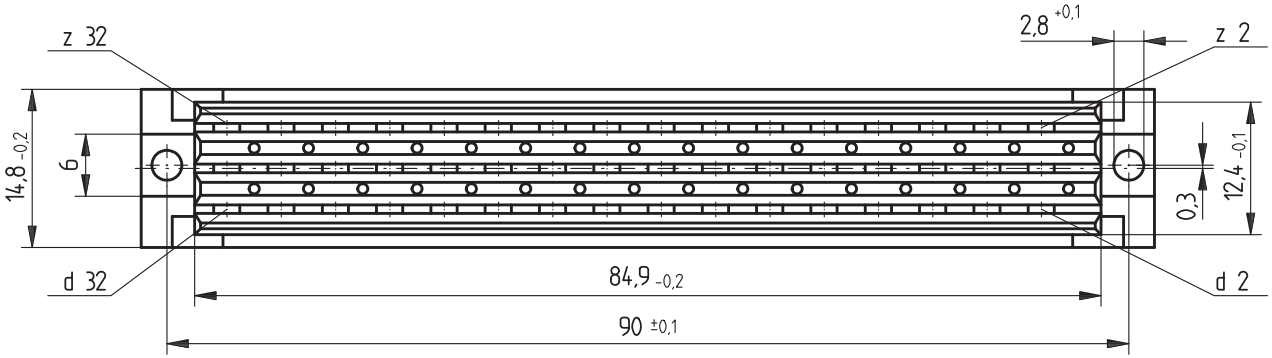

Bestückungsplan / *contact layout*

■ bestückt / *assemble*

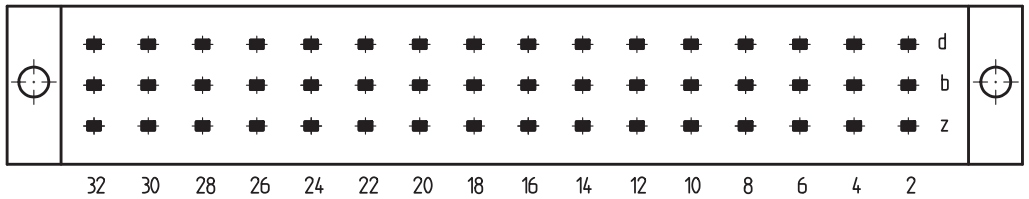

Leiterplatten-Lochbild / *PCB drillhole pattern*

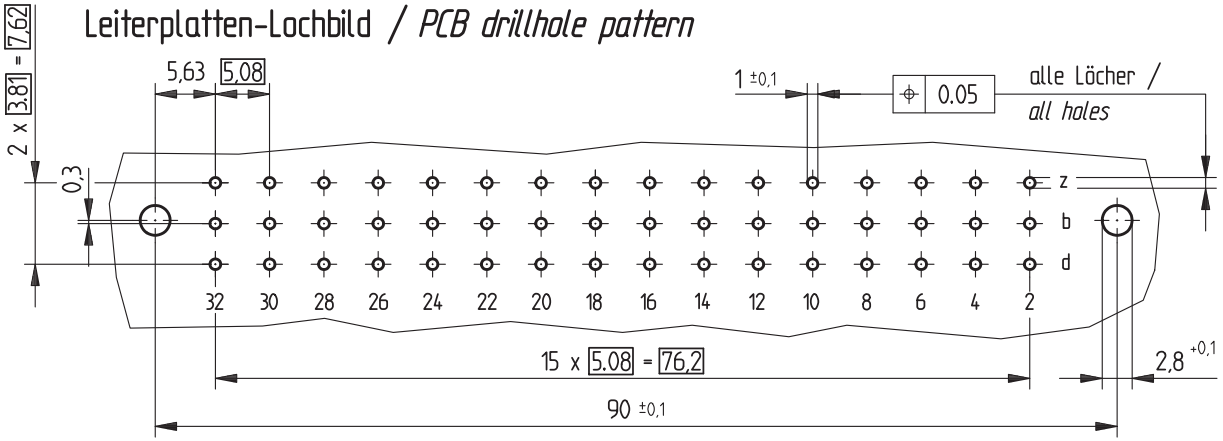

Lötanschluß 0.6 x 0.6 mm / *solder terminal 0.6 x 0.6 mm*

Isolierwerkstoff / *housing material :* PBT GF30

Bauart 2 / *type 2*

Anforderungsstufe 2 = 400 Steckzyklen / *performance class 2 = 400 mating cycles*

Fehlende Maße und Angaben gemäß IEC 60 603-2 / DIN EN 60 603-2

Missing information and dimensions according to IEC 60 603-2

Consider protection memo from DIN 34

Information:	Tolerances	All Dimensions in mm	Scale 2:1
All rights reserved. Only for information. To insure that this is the latest version of this drawing, please contact one of the ERNI companies before using.	Subject to modification without prior notice. Drawing will not be updated		Designation Federleiste F48 flach Löt *Fem. Connector F48 flat Solder*
a 20.02.2006	ERNI www.ERNI.com		054755 1
Index Date	H:00057254.SZA		STVF