10/100Base-TX Transformer Modules

For Auto MDI/MDIX Applications

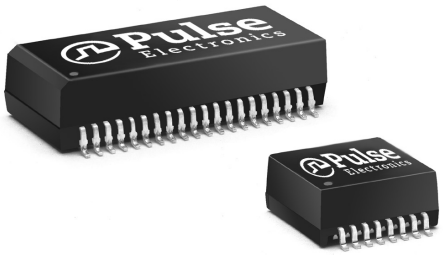

- *RoHS peak reflow temperature rating 245°C*
- *Symmetrical transmit and receive channels for Auto MDI/MDIX capability*
- *Approved for use with the Broadcom BCM5226 and Level One LXT9784*
- *Meets IEEE 802.3 specification*

Electrical Specifications @ 25°C - Operating Temperature 0°C to 70°C

RoHS Compliant Part Number [2]	Insertion Loss (MAX)	Return Loss (dB MIN)				Crosstalk (dB MIN)				Differential to Common Mode Rejection (dB MIN)		Hipot (Vrms MIN)
	0.1-100 MHz	2-30 MHz	40 MHz	50 MHz	60-80 MHz	1 kHZ	30 MHz	60 MHz	100 MHz	1-60 MHz	60-200 MHz	
H1141NL [3a]	-1.0	-18	-14.4	-13.1	-12	-65	-50	-40	-35	-40	-35	1500
H1164NL [3d]	-1.0	-18	-14.4	-13.1	-12	-65	-45	-40	-33	-37	-25	1500
HX1234NL [3d]	-1.4	-18	-14.4	-13.1	-12	-65	-45	-40	-33	-37	-25	1500

1. Operating Temperature **-40°C to +85° C**[ww]

2. For Tape & Reel packaging, add **"T"** suffix to the end of the part number when ordering, (Ex. H1164NL**T**)

3. MSL = Moisture Sensitivity Level a=1 b=2 c=3 d=4

Mechanicals

H1164NL, HX1234NL

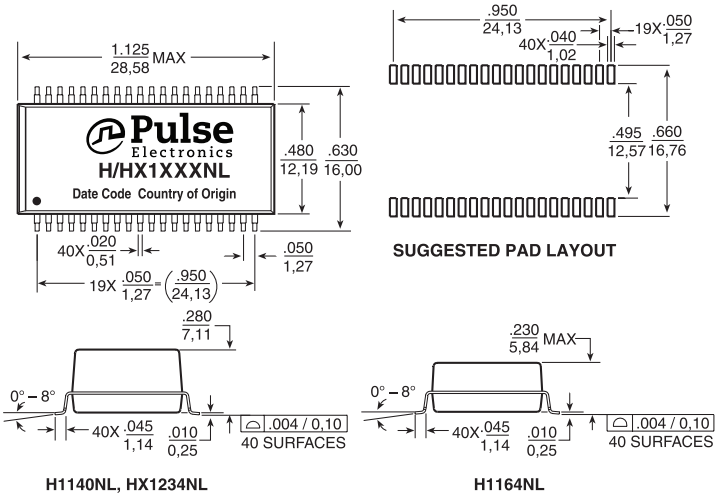

H1141NL

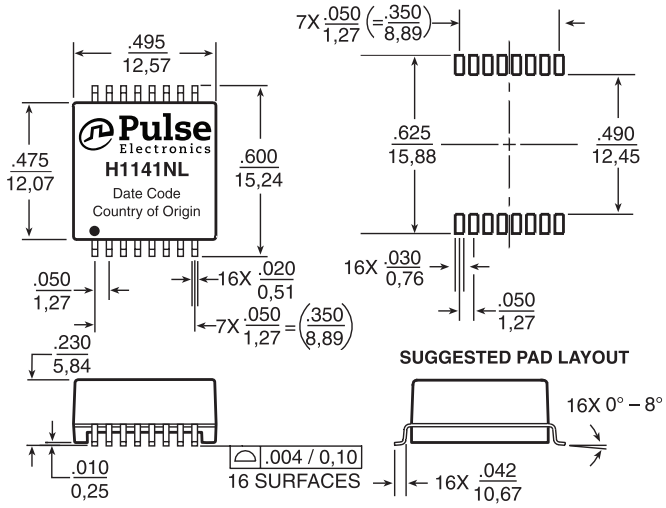

Weight .....4.8 grams
Tape & Reel 250/reel
Tube 15/tube

Dimensions: Inches / mm Unless otherwise specified, all tolerances are ± .010 / 0,25

Weight .....4.8 grams
Tape & Reel 250/reel
Tube 15/tube

USA 858 674 8100 Germany 49 7032 7806 0 Singapore 65 6287 8998 Shanghai 86 21 62787060 China 86 755 33966678 Taiwan 886 3 4356768

10/100Base-TX Transformer Modules

For Auto MDI/MDIX Applications

Schematics

H1141NL

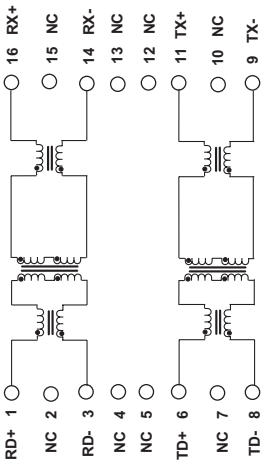

H1164NL, HX1234NL

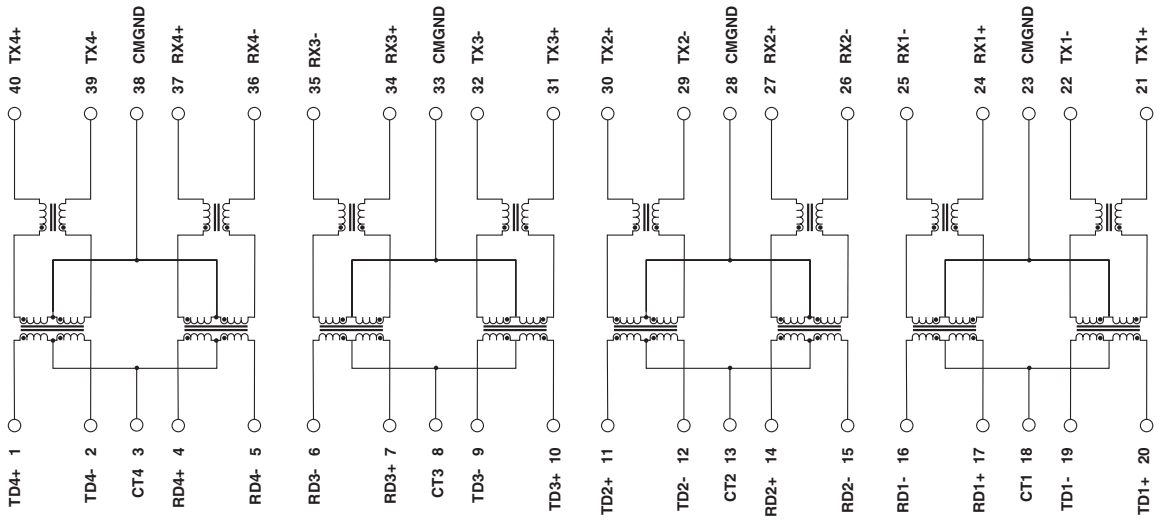

For More Information

Pulse Worldwide Headquarters
12220 World Trade Drive
San Diego, CA
92128
U.S.A.

Tel: 858 674 8100

Pulse Europe
Einsteinstrasse 1
D-71083 Herrenberg
Germany

Tel: 49 7032 7806

Pulse China Headquarters
B402, Shenzhen Academy of Aerospace Technology Bldg.
10th Kejinan Road
High-Tech Zone
Nanshan District
Shenzen, PR China
518057

Pulse North China
Room 2704/2705
Super Ocean Finance Ctr.
2067 Yan An Road West
Shanghai 200336
China

Pulse South Asia
135 Joo Seng Road
#03-02
PM Industrial Bldg.
Singapore 368363

Tel: 65 6287 8998
Fax: 65 6287 8998

Pulse North Asia
3F, No. 198
Zhongyuan Road
Zhongli City
Taoyuan County 320
Taiwan R. O. C.
Tel: 886 3 4356768
Fax: 886 3 4356823
(Pulse)

Performance warranty of products offered on this data sheet is limited to the parameters specified. Data is subject to change without notice. Other brand and product names mentioned herein may be trademarks or registered trademarks of their respective owners. © Copyright, 2013. Pulse Electronics, Inc. All rights reserved.