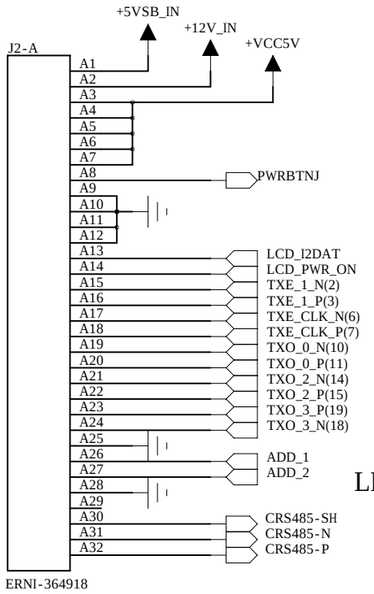

LIC RS232

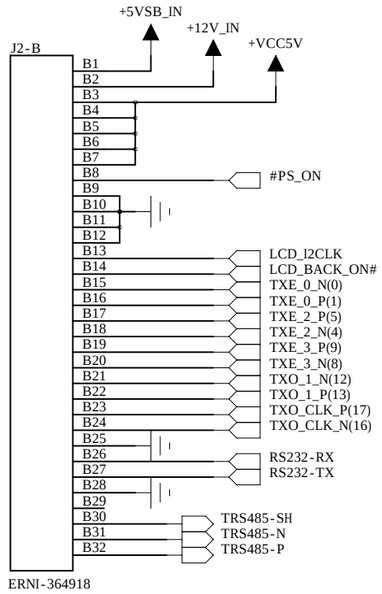

TX B/D

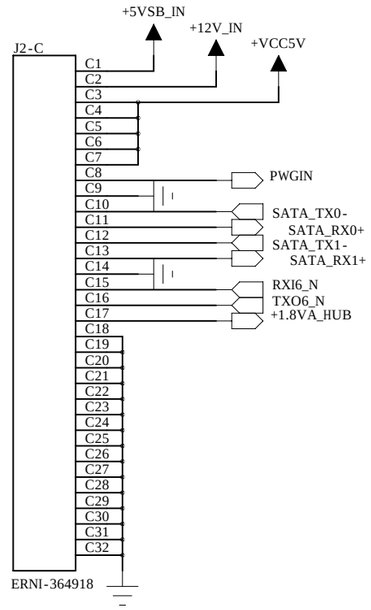

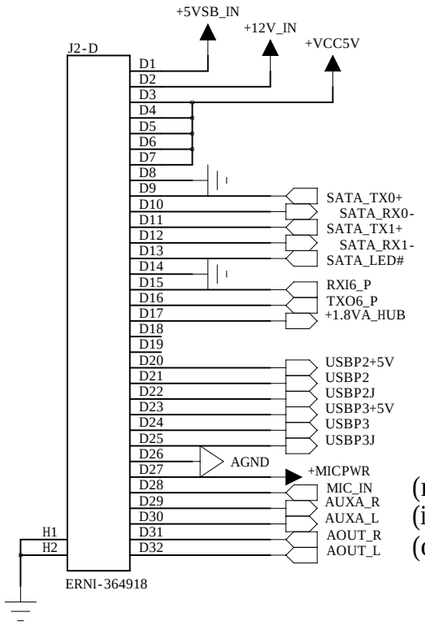

SATA0
SATA1

XTX LAN

USB 0,2,3

(mic)
(in) AUDIO
(out)

FRONT RGB OUTPUT

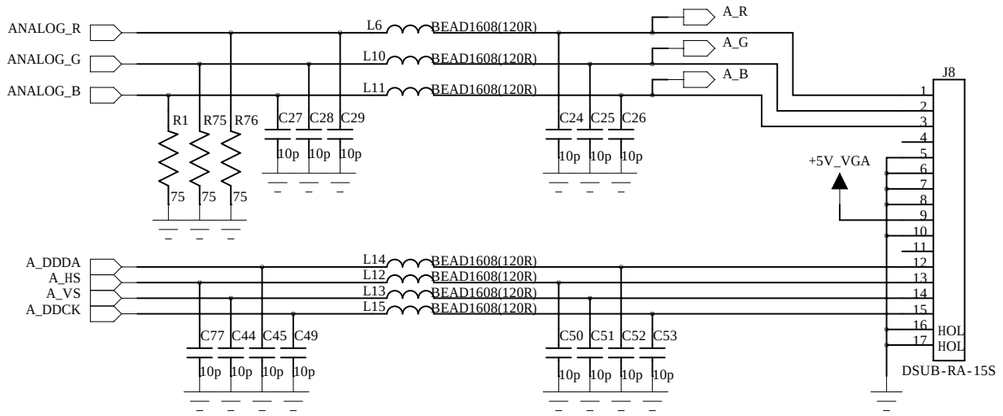

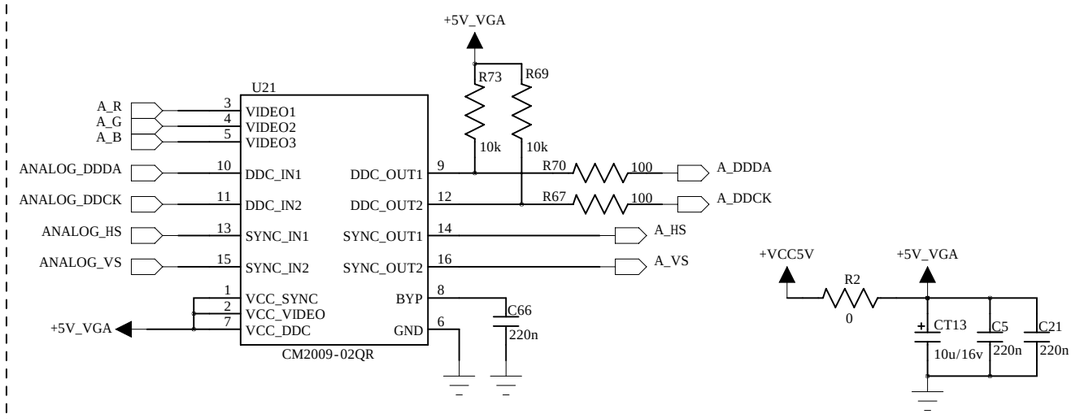

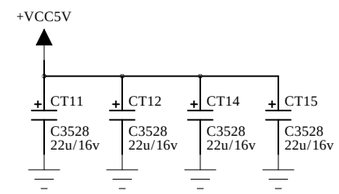

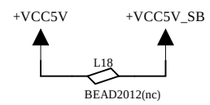

(FRONT USB CONNECT)

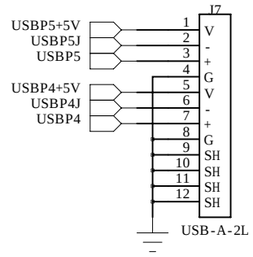

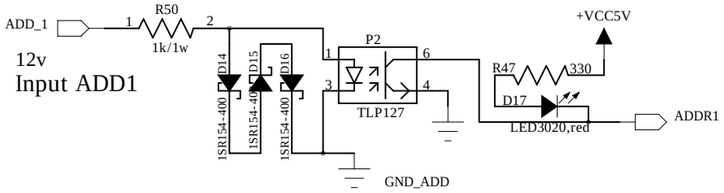

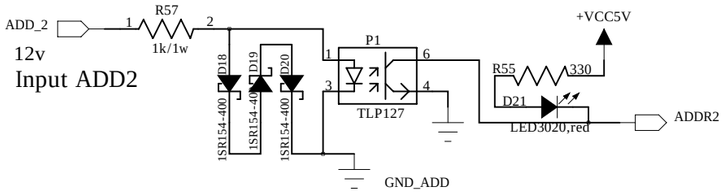

(FRONT X13 CONNECT)

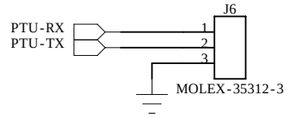

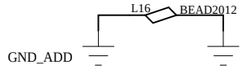

Scale	1:1	Title DV-CNCS-A0		
APP	<App By>	Size A3	Document Number SP5C104N-CNCS-E01	Rev A0
CHK	<CHECKED>	drawing date: 2012-07-26	sheet: 1 of 6	
DGN	<Drawn By>			

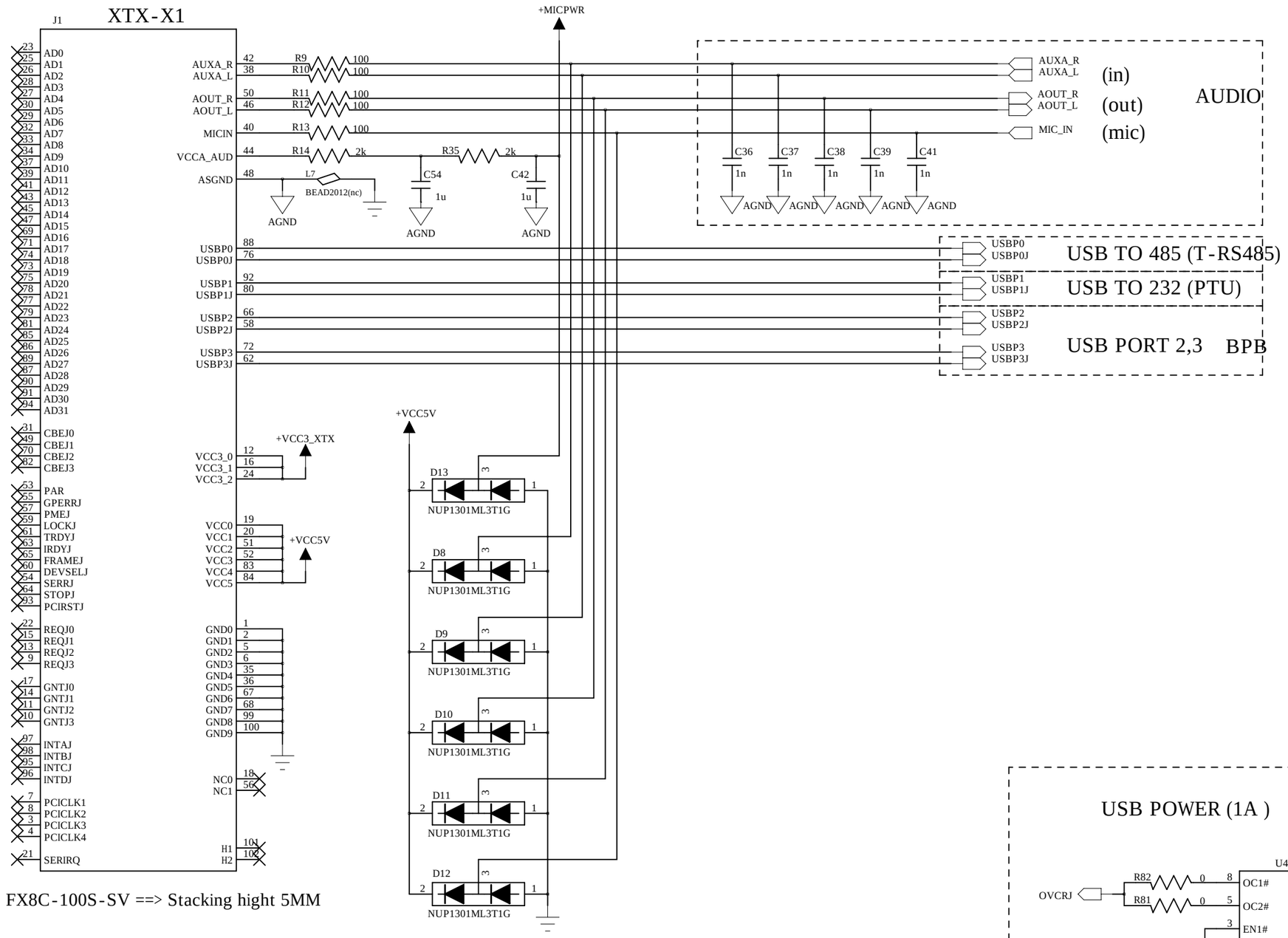

FX8C-100S-SV ==> Stacking hight 5MM

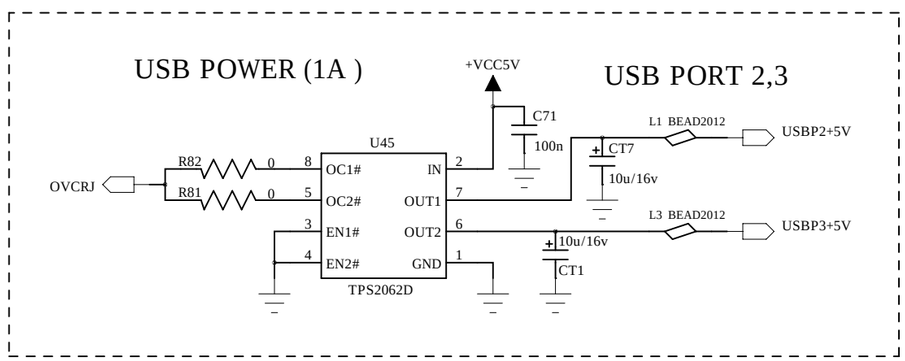

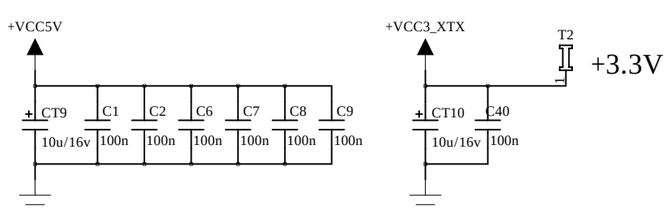

Scale	1:1	Title	DV-CNCS-A0
APP	<App By>	Size A3	Document Number SP5C104N-CNCS-E01 — Rev A0
CHK	<CHECKED>	drawing date: 2012-07-26	sheet: 2 of 6
DGN	<Drawn By>		

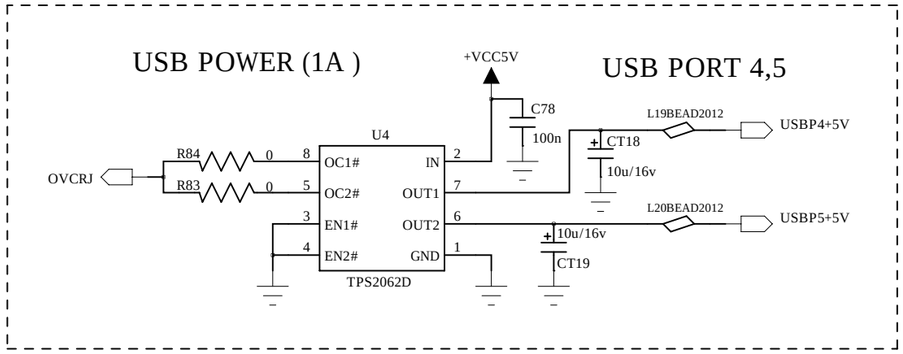

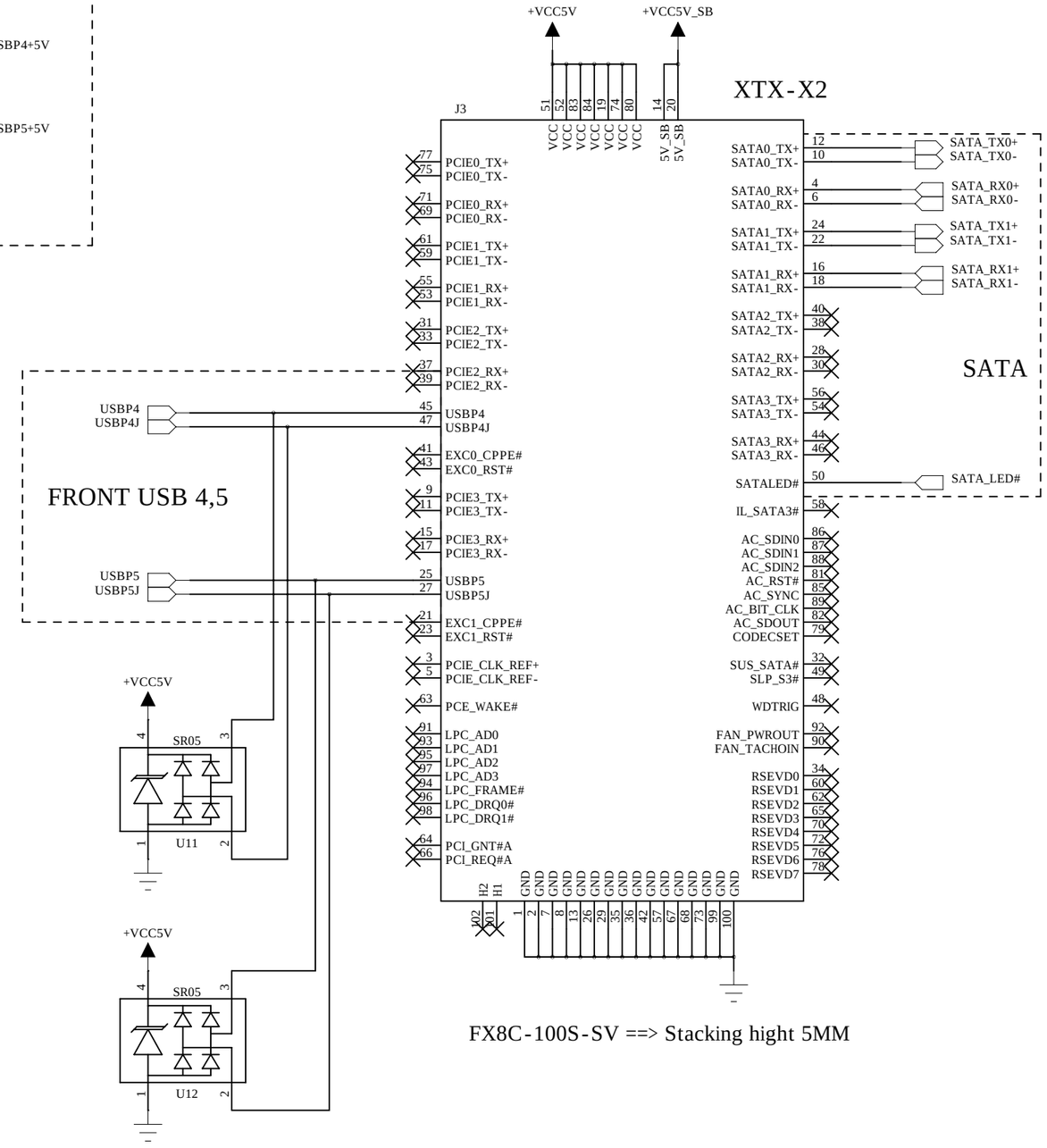

FX8C-100S-SV ==> Stacking hight 5MM

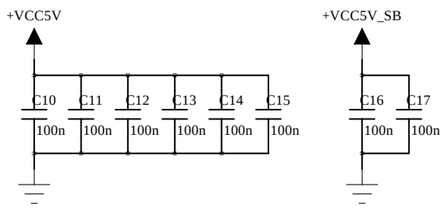

Scale	1:1	Title	DV-CNCS-A0
APP	<App By>	Size A3 / Document Number	SP5C104N-CNCS-E01 / Rev A0
CHK	<CHECKED>	drawing date: 2012-07-26	sheet: 3 of 6
DGN	<Drawn By>		

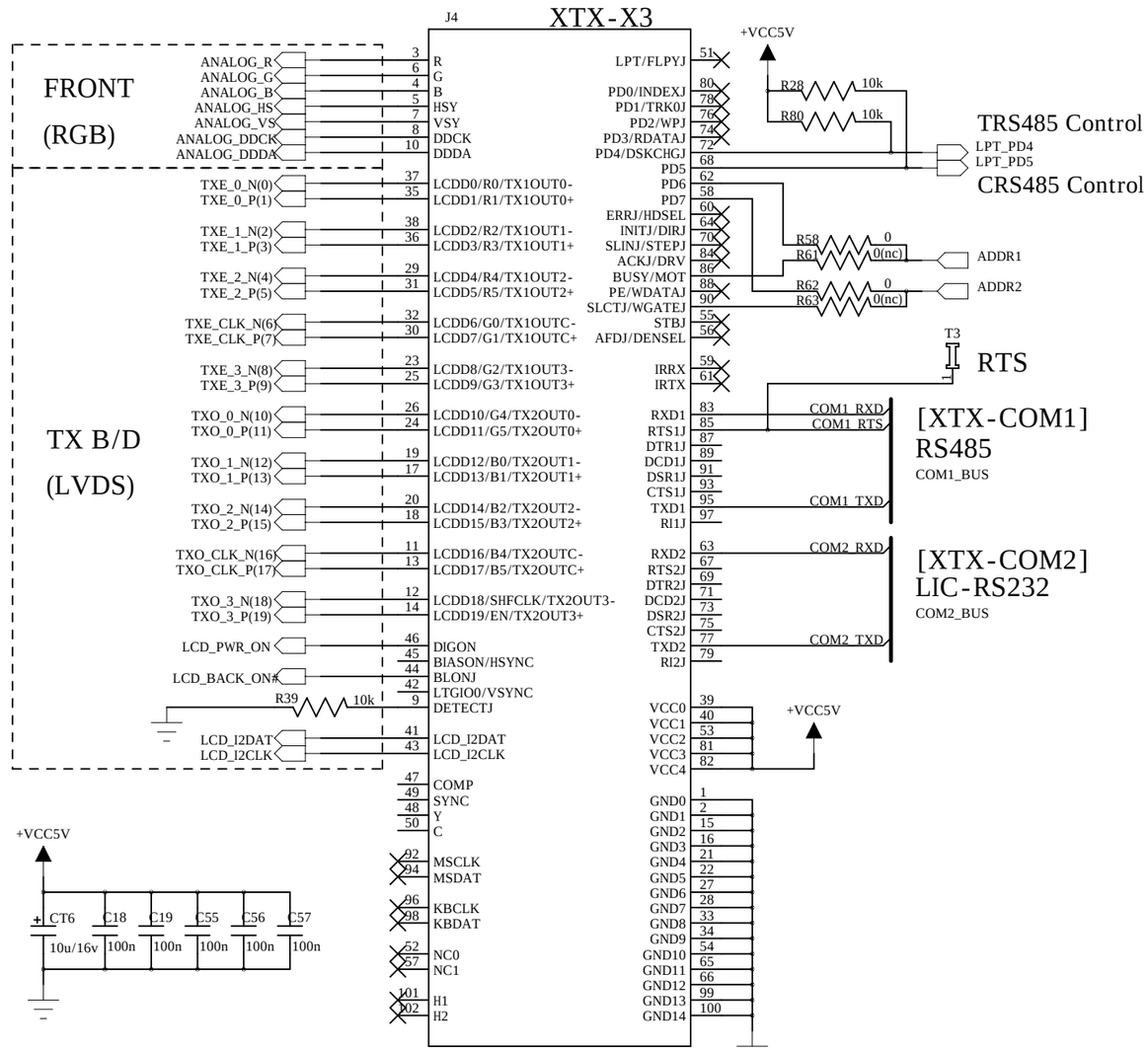

FX8C-100S-SV ==> Stacking hight 5MM

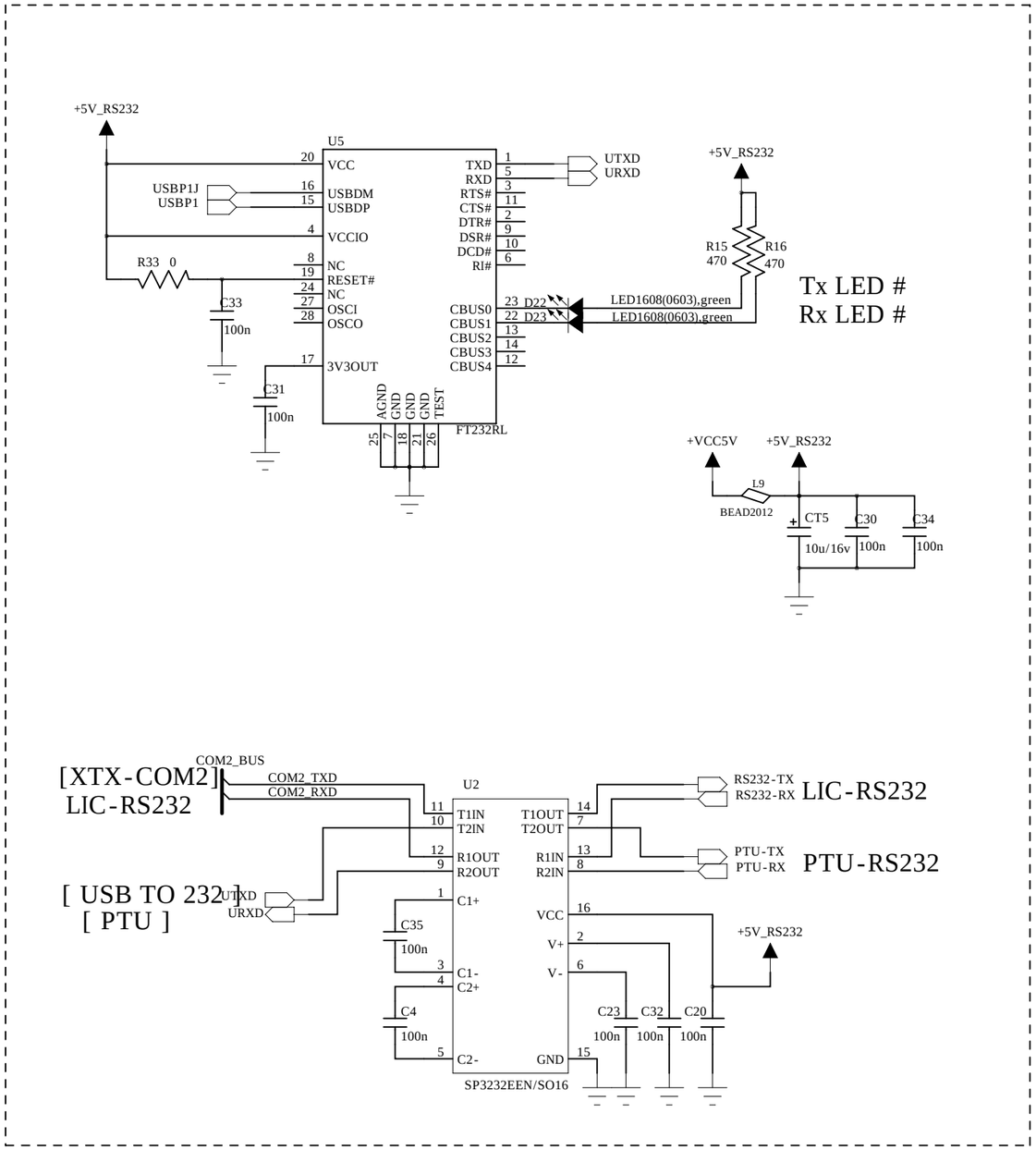

Scale	1:1	Title	DV-CNCS-A0
APP	<App By>	Size A3	Document Number SP5C104N-CNCS-E01 — Rev A0
CHK	<CHECKED>	drawing date: 2012-07-26	sheet: 4 of 6
DGN	<Drawn By>		

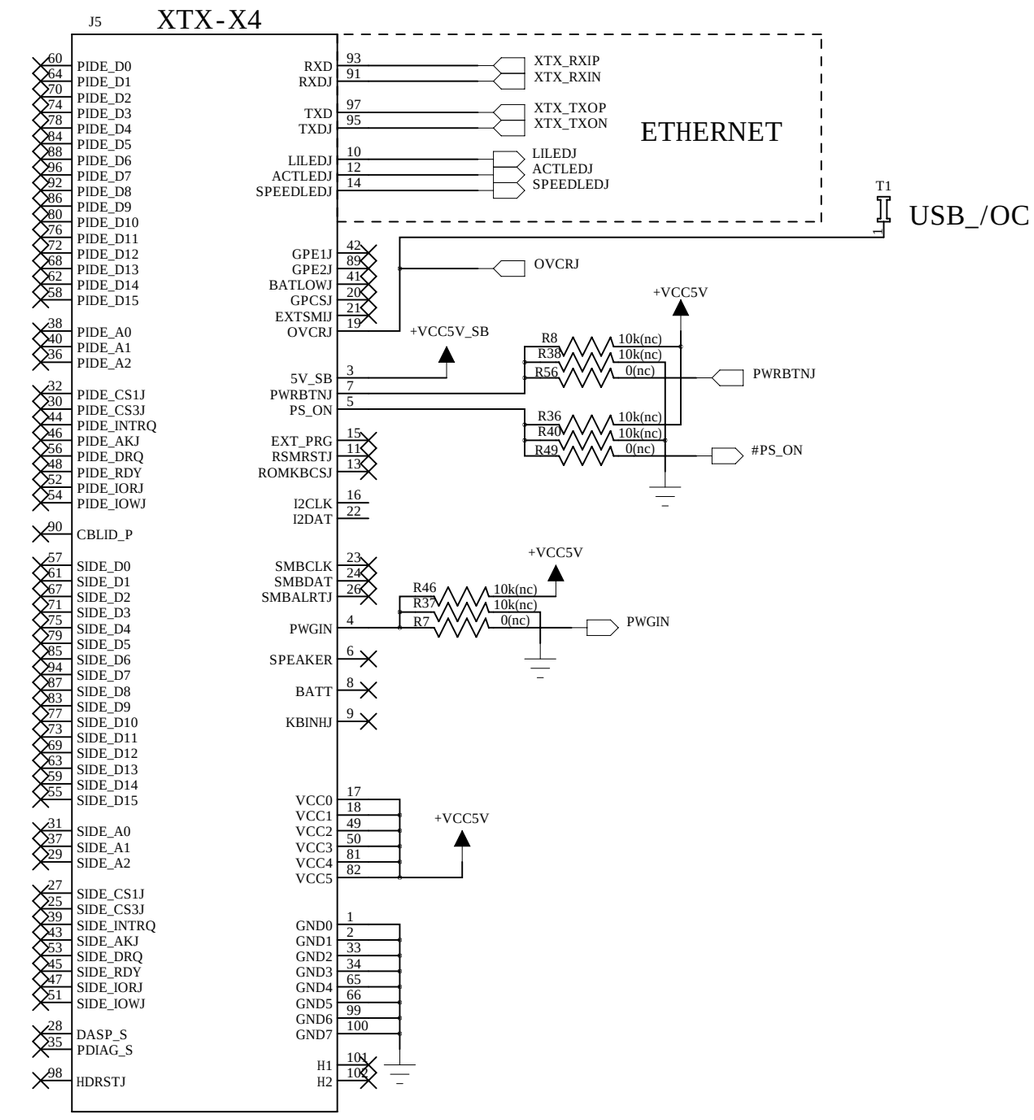

FX8C-100S-SV ==> Stacking hight 5MM

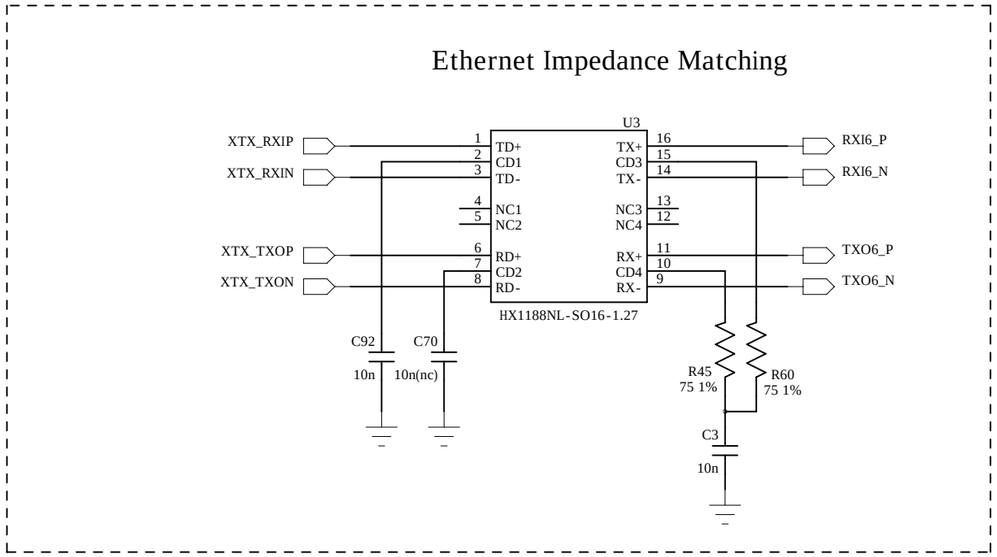

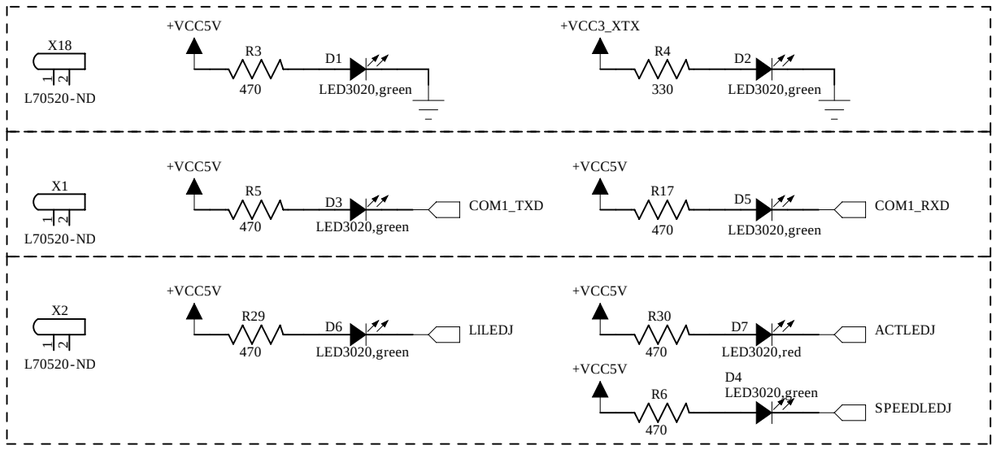

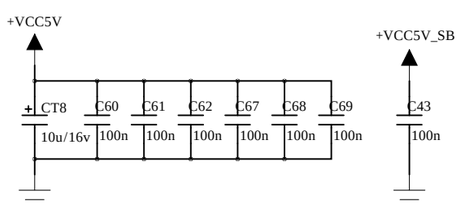

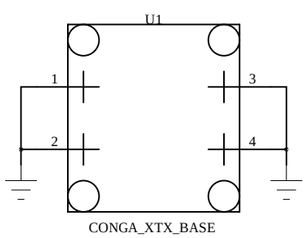

Scale	1:1	Title	DV-CNCS-A0
APP	<App By>	Size A3 / Document Number	SP5C104N-CNCS-E01 / Rev A0
CHK	<CHECKED>	drawing date: 2012-07-26	sheet: 5 of 6
DGN	<Drawn By>		

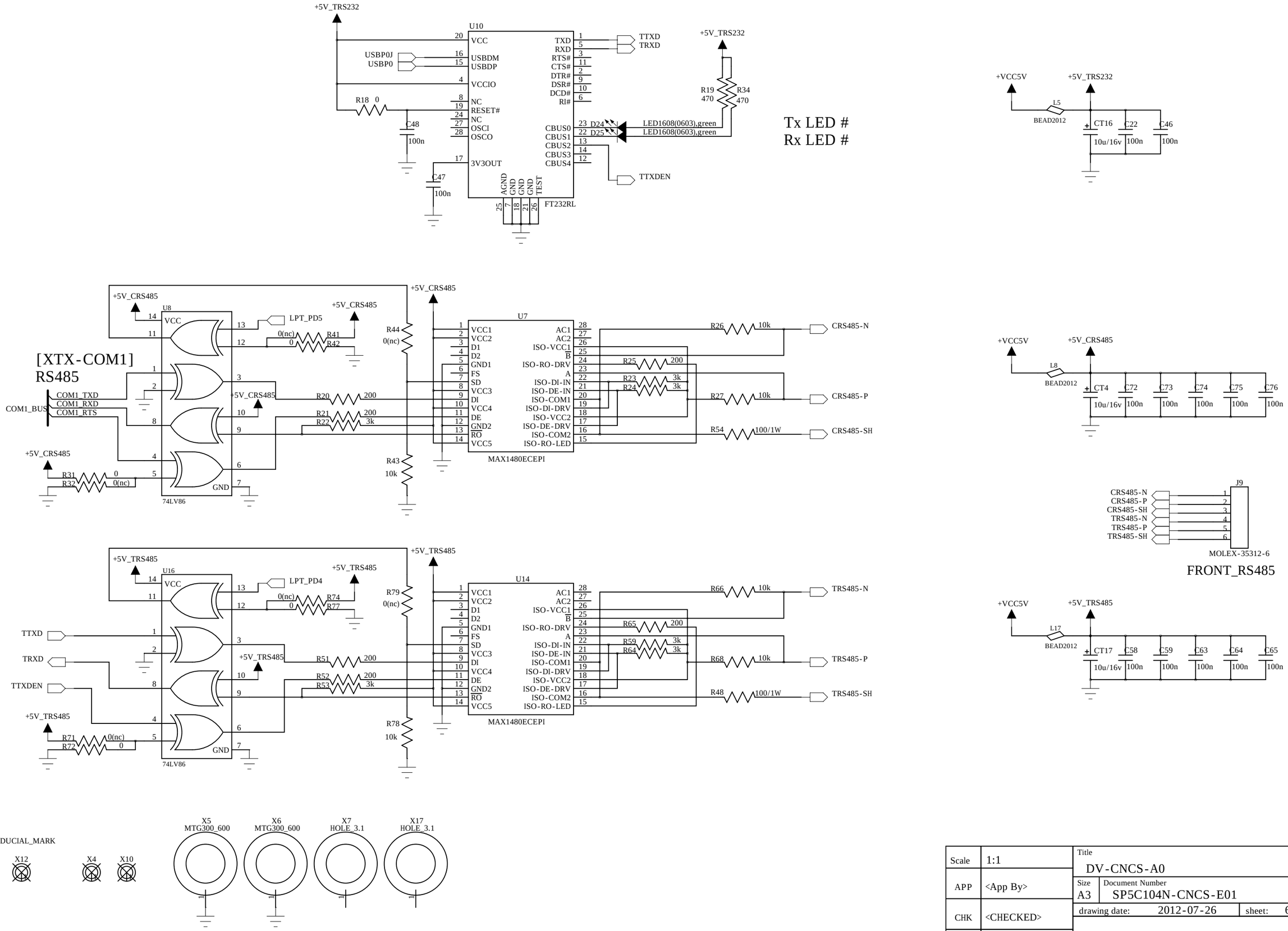

Scale	1:1	Title DV-CNCS-A0		
APP	<App By>	Size A3	Document Number SP5C104N-CNCS-E01	Rev A0
CHK	<CHECKED>	drawing date: 2012-07-26	sheet: 6 of 6	
DGN	<Drawn By>			