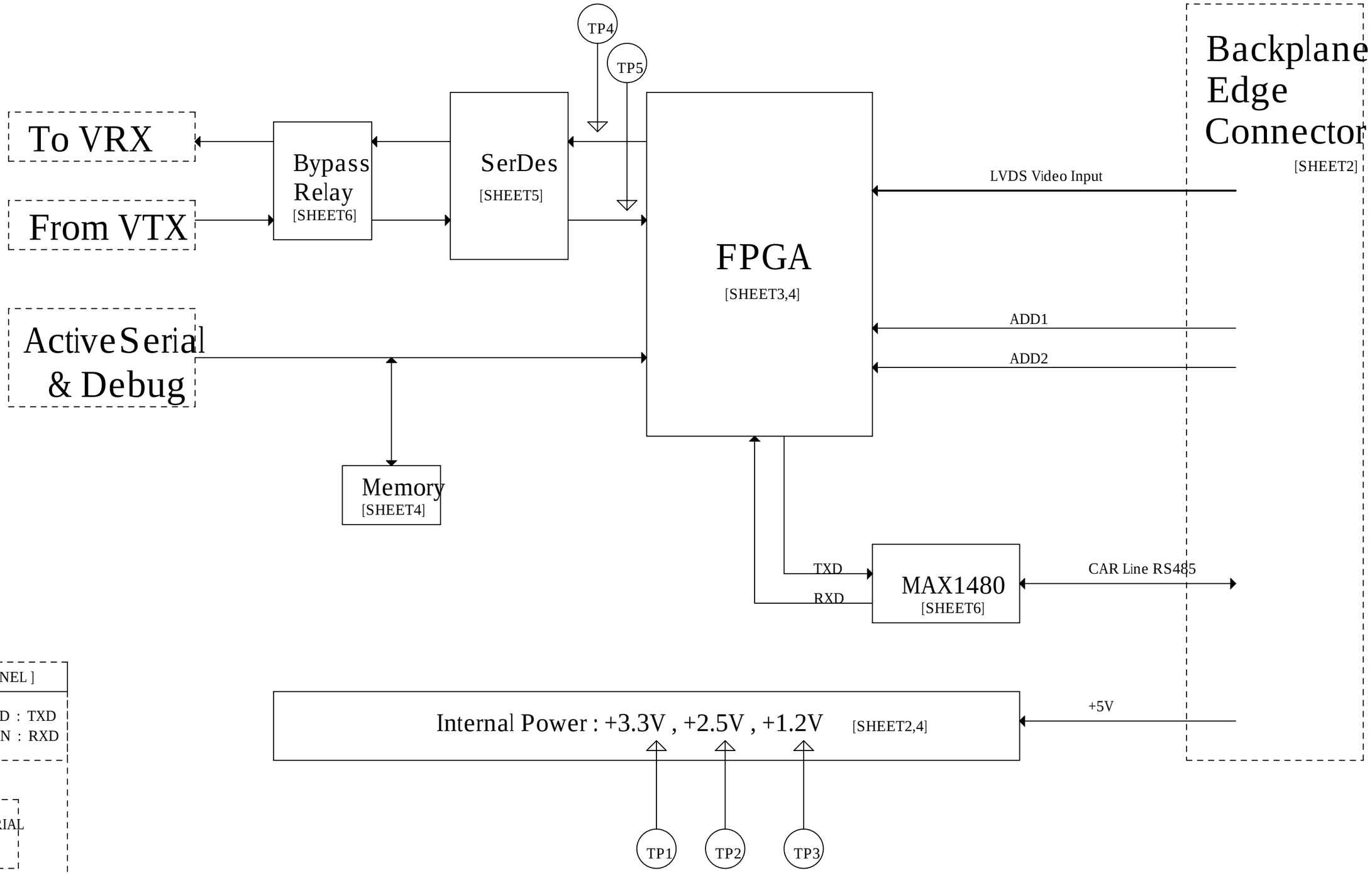

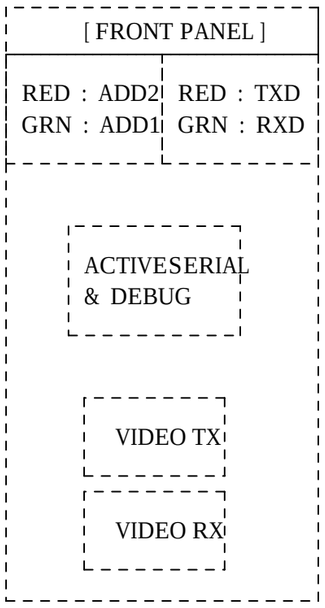

Scale	1:1	Title: DENVER-VTX-A2		
APP	tsahn	Size: A3	Document Number: SP5C104N-VTX-E01	Rev: C.00
CHK	ghson	drawing date: 2012-07-26	sheet: 1 of 6	
DGN	sysong			

SHEET	2.BACKCON-POWER

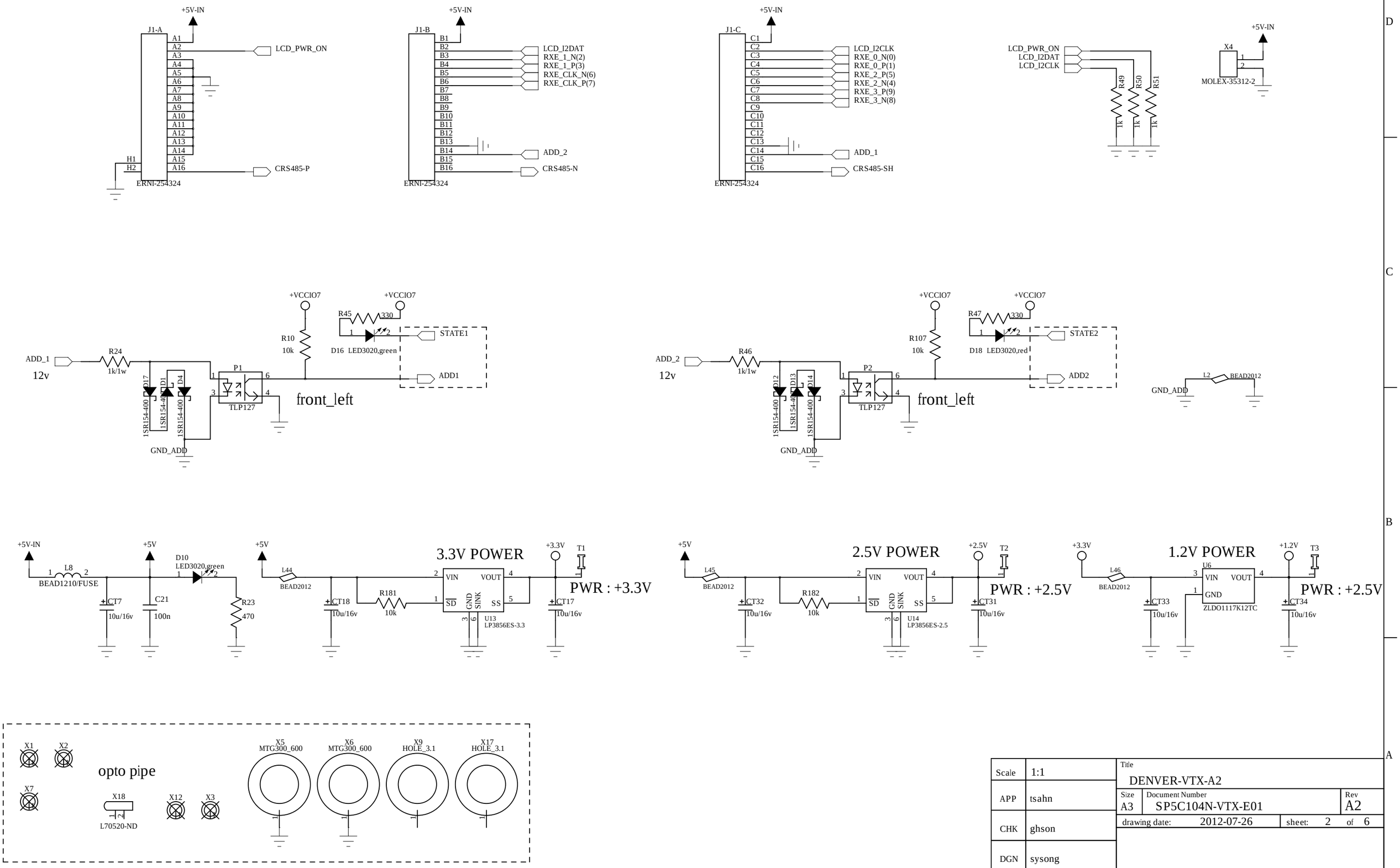

Scale	1:1	Title	DENVER-VTX-A2
APP	tsahn	Size A3	Document Number SP5C104N-VTX-E01 — Rev A2
CHK	ghson	drawing date: 2012-07-26	sheet: 2 of 6
DGN	sysong		

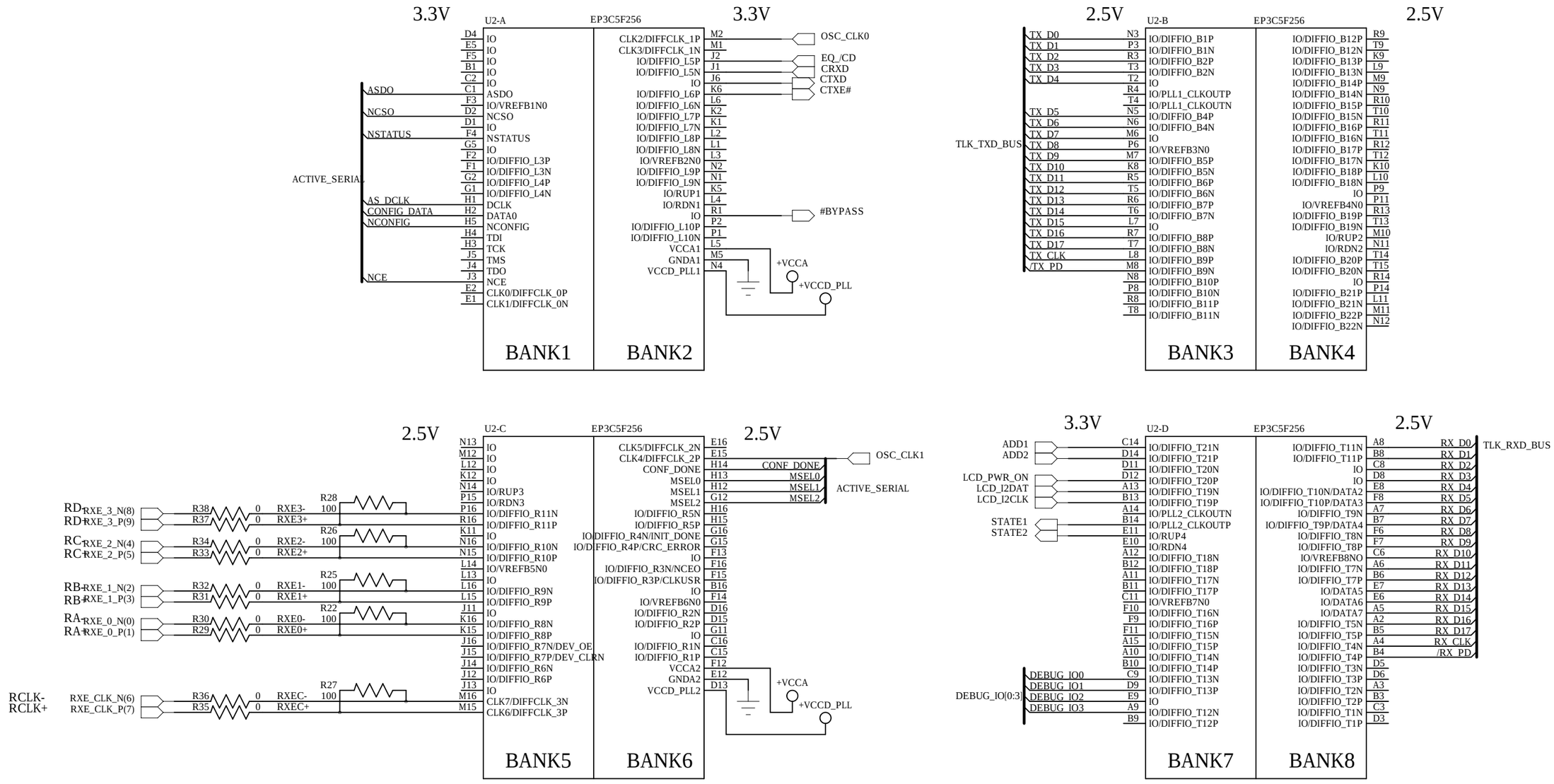

Scale	1:1	Title	DENVER-VTX-A2
APP	tsahn	Size A3	Document Number SP5C104N-VTX-E01 — Rev A2
CHK	ghson	drawing date: 2012-07-26	sheet: 3 of 6
DGN	sysong		

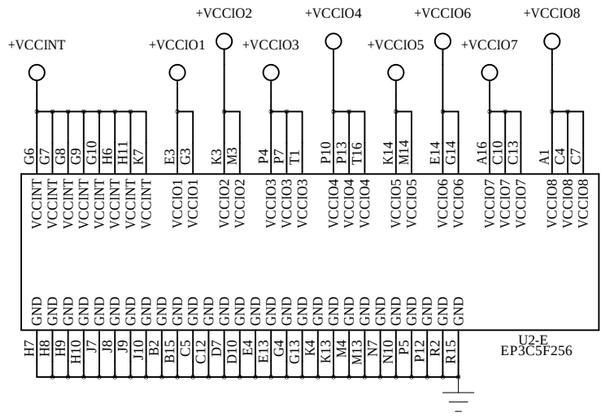

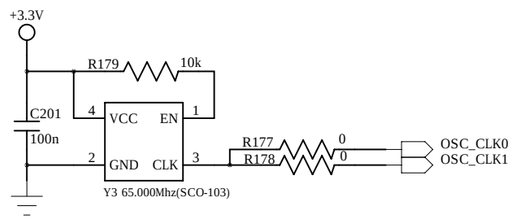

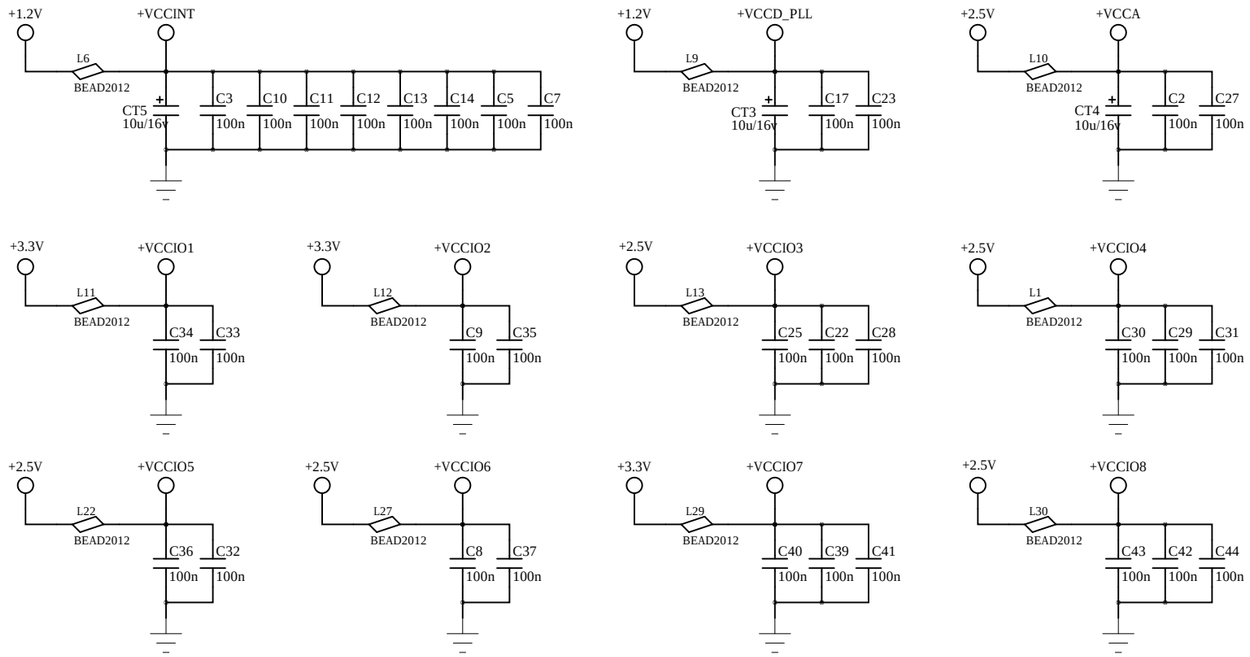

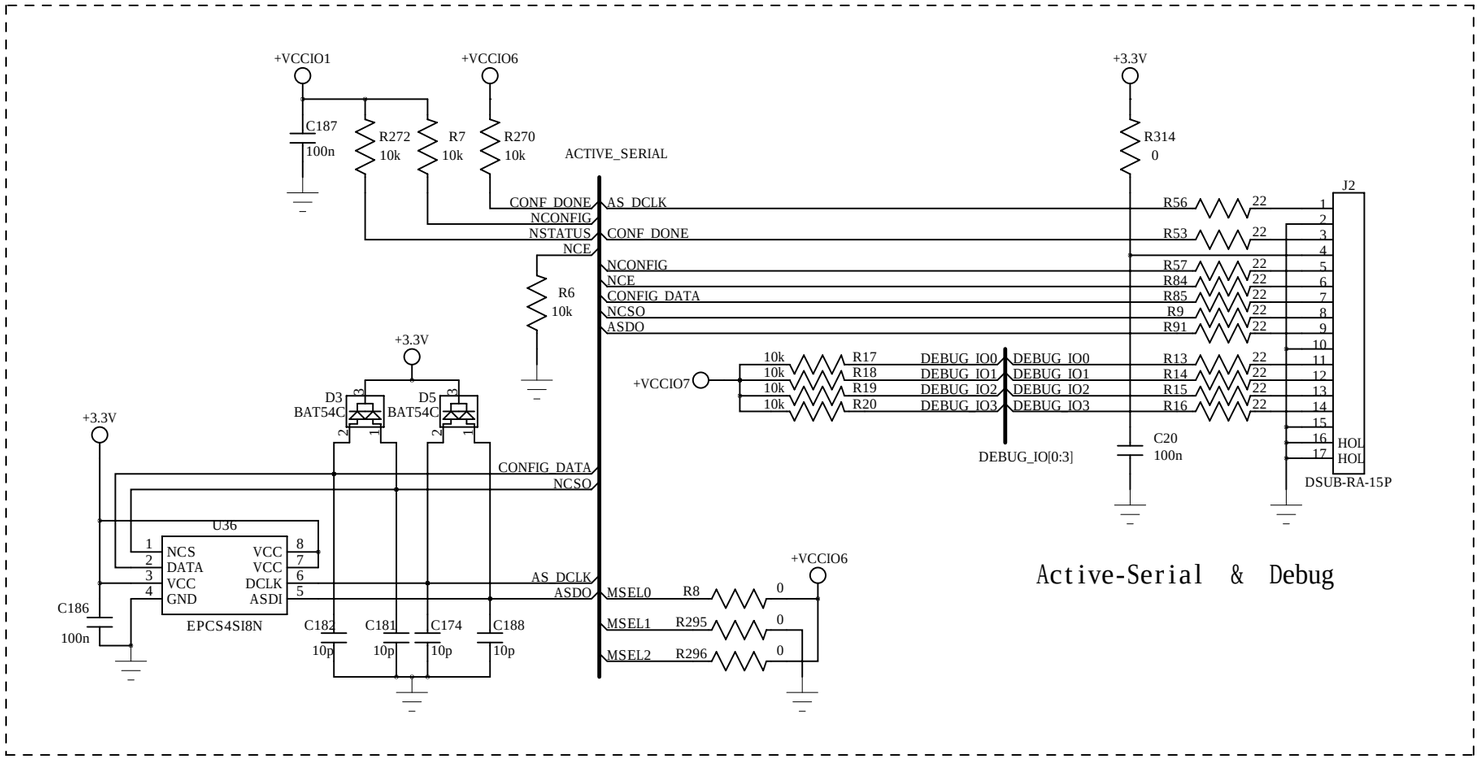

Scale	1:1	Title DENVER-VTX-A2		
APP	tsahn	Size A3	Document Number SP5C104N-VTX-E01	Rev A2
CHK	ghson	drawing date: 2012-07-26	sheet: 4 of 6	
DGN	sysong			

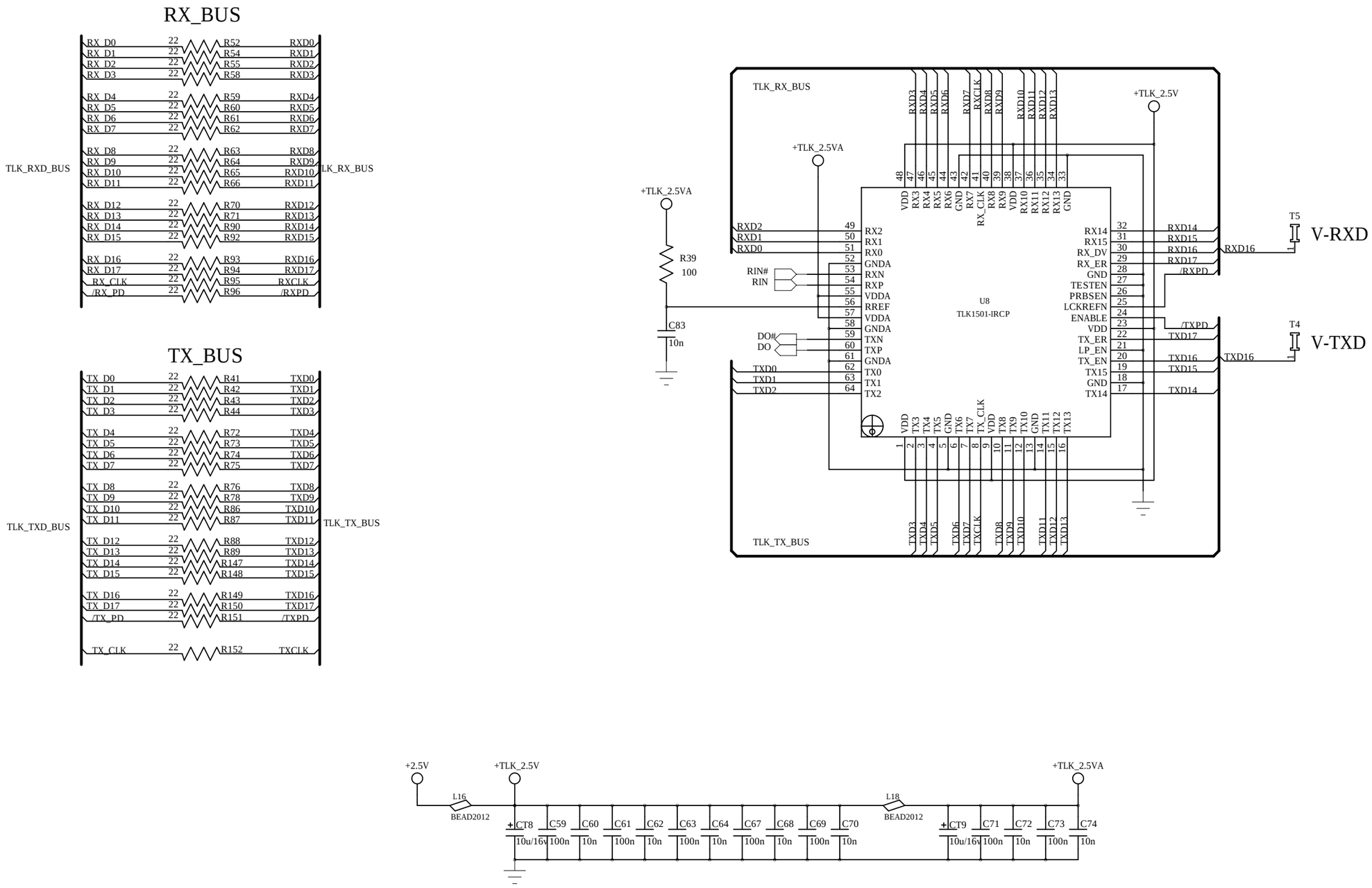

Scale	1:1	Title	DENVER-VTX-A2
APP	tsahn	Size A3	Document Number SP5C104N-VTX-E01 — Rev A2
CHK	ghson	drawing date: 2012-07-26	sheet: 5 of 6
DGN	sysong		

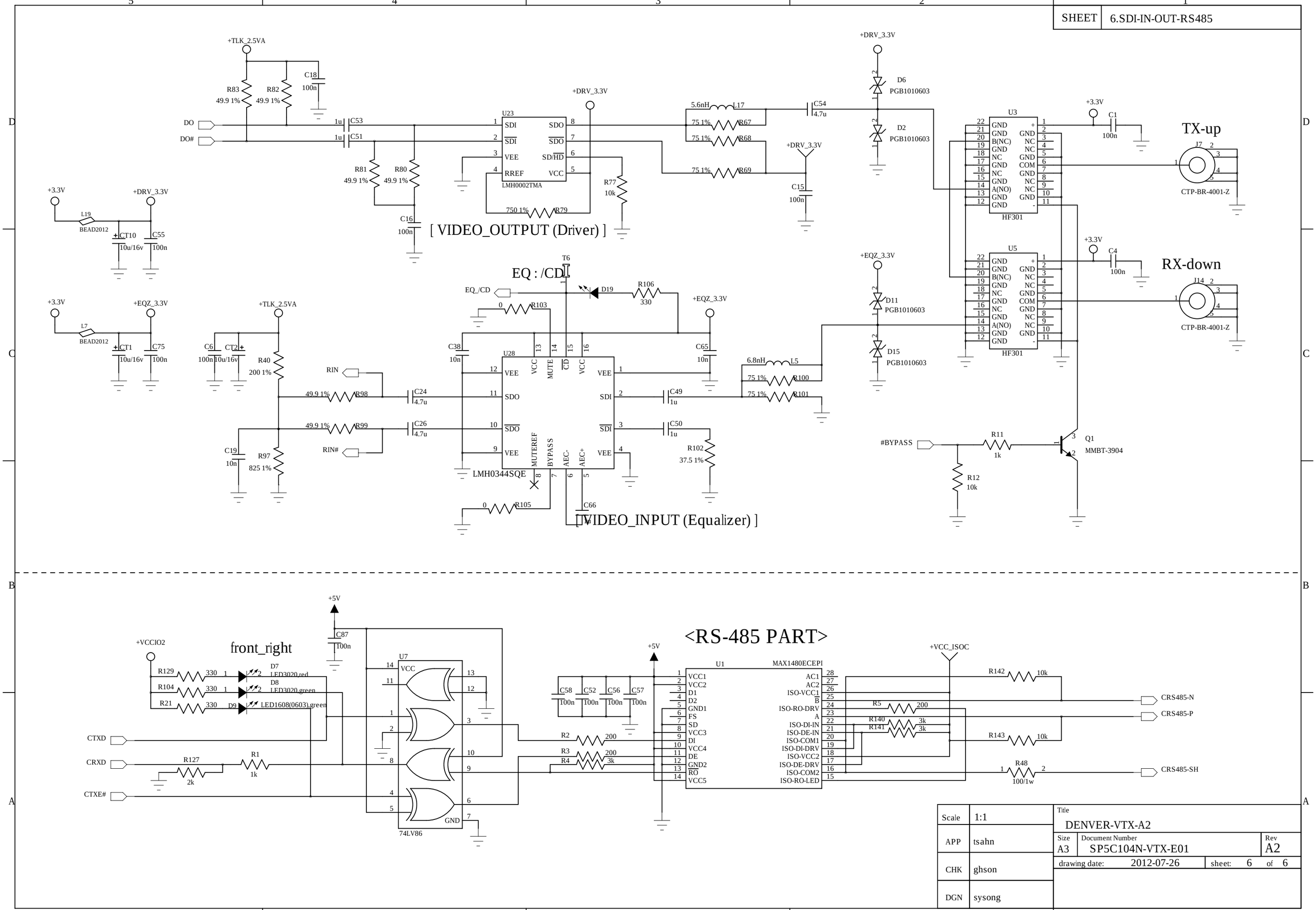
SHEET 6.SDI-IN-OUT-RS485
[VIDEO_OUTPUT (Driver)]
EQ : /CD
[VIDEO_INPUT (Equalizer)]
LMH0002TMA
LMH0344SQE
HF301
CTP-BR-4001-Z
TX-up
RX-down
MMBT-3904
PGB1010603
BEAD2012
LED3020,red
LED3020,green
LED1608(0603),green
74LV86
MAX1480ECEPI
<RS-485 PART>
front_right
CRS485-N
CRS485-P
CRS485-SH
Scale 1:1
APP tsahn
CHK ghson
DGN sysong
Title DENVER-VTX-A2
Size A3
Document Number SP5C104N-VTX-E01
Rev A2
drawing date: 2012-07-26
sheet: 6 of 6