BRITISH STANDARD

BS EN 50121-3-2:2000

Railway applications — Electromagnetic compatibility —

Part 3-2: Rolling stock — Apparatus

The European Standard EN 50121-3-2:2000 has the status of a British Standard

ICS 29.280; 33.100.01; 45.060.01

NO COPYING WITHOUT BSI PERMISSION EXCEPT AS PERMITTED BY COPYRIGHT LAW

National foreword

This British Standard is the official English language version of EN 50121-3-2:2000. It supersedes DD ENV 50121-3-2:1996 which is withdrawn.

The UK participation in its preparation was entrusted to Technical Committee GEL/9, Railway electrotechnical applications, which has the responsibility to:

— aid enquirers to understand the text;

— present to the responsible European committee any enquiries on the interpretation, or proposals for change, and keep the UK interests informed;

— monitor related international and European developments and promulgate them in the UK.

A list of organizations represented on this committee can be obtained on request to its secretary.

Cross-references

The British Standards which implement international or European publications referred to in this document may be found in the BSI Standards Catalogue under the section entitled "International Standards Correspondence Index", or by using the "Find" facility of the BSI Standards Electronic Catalogue.

A British Standard does not purport to include all the necessary provisions of a contract. Users of British Standards are responsible for their correct application.

Compliance with a British Standard does not of itself confer immunity from legal obligations.

Summary of pages

This document comprises a front cover, an inside front cover, the EN title page, pages 2 to 16, an inside back cover and a back cover.

The BSI copyright notice displayed in this document indicates when the document was last issued.

This British Standard, having been prepared under the direction of the Electrotechnical Sector Committee, was published under the authority of the Standards Committee and comes into effect on 15 December 2000

© BSI 12-2000

ISBN 0 580 36755 X

Amendments issued since publication

Amd. No.	Date	Comments

EUROPEAN STANDARD

NORME EUROPÉENNE

EUROPÄISCHE NORM

EN 50121-3-2

September 2000

ICS 29.020; 29.280; 45.060.01

English version

Railway applications - Electromagnetic compatibility - Part 3-2: Rolling stock - Apparatus

Applications ferroviaires - Compatibilité électromagnétique Partie 3-2: Matériel roulant - Appareils

Bahnanwendungen - Elektromagnetische Verträglichkeit Teil 3-2: Bahnfahrzeuge - Geräte

This European Standard was approved by CENELEC on 2000-04-01. CENELEC members are bound to comply with the CEN/CENELEC Internal Regulations which stipulate the conditions for giving this European Standard the status of a national standard without any alteration.

Up-to-date lists and bibliographical references concerning such national standards may be obtained on application to the Central Secretariat or to any CENELEC member.

This European Standard exists in three official versions (English, French, German). A version in any other language made by translation under the responsibility of a CENELEC member into its own language and notified to the Central Secretariat has the same status as the official versions.

CENELEC members are the national electrotechnical committees of Austria, Belgium, Czech Republic, Denmark, Finland, France, Germany, Greece, Iceland, Ireland, Italy, Luxembourg, Netherlands, Norway, Portugal, Spain, Sweden, Switzerland and United Kingdom.

CENELEC

European Committee for Electrotechnical Standardization
Comité Européen de Normalisation Electrotechnique
Europäisches Komitee für Elektrotechnische Normung

Central Secretariat: rue de Stassart 35, B - 1050 Brussels

© 2000 CENELEC - All rights of exploitation in any form and by any means reserved worldwide for CENELEC members.

Ref. No. EN 50121-3-2:2000 E

Foreword

This European Standard was prepared by SC 9XB, Electromechanical material on board of rolling stock, of Technical Committee CENELEC TC 9X, Electrical and electronic applications for railways, in accordance with the decisions taken by TC 9X.

The text of the draft was submitted to the formal vote and was approved by CENELEC as EN 50121-3-2 on 2000-04-01.

The following dates were fixed:

- latest date by which the EN has to be implemented at national level by publication of an identical national standard or by endorsement	(dop)	2001-04-01
- latest date by which the national standards conflicting with the EN have to be withdrawn	(dow)	2003-04-01

This European Standard is to be read in conjunction with EN 50121-1:2000.

This standard forms Part 3-2 of the European Standard series EN 50121, published under the general title Railway applications - Electromagnetic compatibility. The series consists of:

- Part 1: General;
- Part 2: Emission of the whole railway system to the outside world;
- Part 3-1: Rolling stock - Train and complete vehicle;
- Part 3-2: Rolling stock - Apparatus;
- Part 4: Emission and immunity of the signalling and telecommunications apparatus;
- Part 5: Emission and immunity of fixed power supply installations and apparatus.
-

Annexes "normative" are part of the body of the standard.

Annexes designated "informative" are given only for information.

In this standard, annexes A and B are informative.

© BSI 12-2000

Contents

1 Scope 4

2 Normative references 4

3 Definitions 5

4 Performance criteria 5

5 Conditions during testing 6

6 Applicability 6

7 Emission tests and limits 6

8 Immunity tests and limits 8

Annex A (informative) Examples of apparatus and ports 10

Annex B (informative) Conducted disturbances generated by power converters in the range of 9 kHz to 30 MHz 15

© BSI 12-2000

1 Scope

This European Standard applies to emission and immunity aspects of EMC for electrical and electronic apparatus intended for use on railway rolling stock.

The frequency range considered is from d.c. to 400 GHz. At present, testing is not defined for frequencies above 1 GHz.

The application of tests shall depend on the particular apparatus, its configuration, its ports, its technology and its operating conditions.

This standard takes into account the internal environment of the railway rolling stock and the external environment of the railway, and interference to the apparatus from equipment such as hand-held radio transmitters.

If a port is intended to transmit or receive for the purpose of radio communication then the emission and immunity limits in this standard at the communication frequency do not apply.

This standard does not apply to transient emissions when starting or stopping the apparatus.

The objective of this standard is to define limits and test methods for electromagnetic emissions and immunity test requirements in relation to conducted and radiated disturbances.

These limits and tests represent essential electromagnetic compatibility requirements.

Emission requirements have been selected so as to ensure that disturbances generated by the apparatus operated normally on railway rolling stock do not exceed a level which could prevent other apparatus from operating as intended.

Likewise, the immunity requirements have been selected so as to ensure an adequate level of immunity for rolling stock apparatus.

The levels do not however cover extreme cases which may occur with an extremely low probability of occurrence in any location. Specific requirements which deviate from this standard shall be specified.

Test requirements are specified for each port considered.

These specific provisions are additional to the general provisions in EN 50121-1.

2 Normative references

This European Standard incorporates by dated or undated reference, provisions from other publications. These normative references are cited at the appropriate places in the text and the publications are listed hereafter. For dated references, subsequent amendments to or revisions of any of these publications apply to this European Standard only when incorporated in it by amendment or revision. For undated references the latest edition of the publication referred to applies.

EN 50121-1	Railway applications - Electromagnetic compatibility - Part 1: General.
EN 50121-3-1	Part 3-1: Rolling stock - Train and complete vehicle.
EN 50155	Railway applications - Electronic equipment used on rolling stock.
EN 55011	Limits and methods of measurement of radio disturbance characteristics of industrial, scientific and medical (ISM) radio-frequency equipment (CISPR 11, modified).
EN 55022	Information technology equipment - Radio disturbance characteristics - Limits and methods of measurement (CISPR 22, modified).

© BSI 12-2000

EN 61000-4-2	Electromagnetic Compatibility (EMC) - Part 4-2: Testing and measurement techniques - Electrostatic discharge immunity test (IEC 61000-4-2).
EN 61000-4-3	Part 4-3: Testing and measurement techniques - Radiated, radio-frequency, electromagnetic field immunity test (IEC 61000-4-3, modified).
EN 61000-4-4	Part 4-4: Testing and measurement techniques - Electrical fast transient/burst immunity test (IEC 61000-4-4).
EN 61000-4-6	Part 4-6: Testing and measurement techniques - Immunity to conducted disturbances, induced by radio-frequency fields (IEC 61000-4-6).
CISPR 16-1	Specification for radio disturbance and immunity measuring apparatus and methods - Part 1: Radio disturbance and immunity measuring apparatus.

3 Definitions

For the purpose of this Part 3-2 of the European Standard, the following definitions apply.

3.1
rolling stock apparatus
finished product with an intrinsic function intended for implementation into the rolling stock installation which may be placed on the market as a single commercial unit

3.2
port
particular interface of the specified apparatus with the external environment, e.g. a.c. power port, d.c. power port, I/O (input/output) port

3.3
enclosure port
physical boundary of the apparatus through which electromagnetic fields may radiate or impinge

The main categories of ports for rolling stock apparatus are presented in Figure 1.

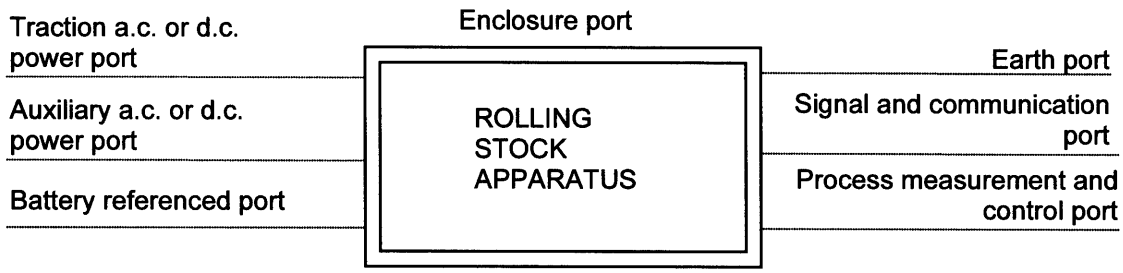

Figure 1: Main categories of ports

Typical examples of rolling stock apparatus with their ports are listed in annex A.

4 Performance criteria

The variety and the diversity of the apparatus within the scope of this standard makes it difficult to define precise criteria for the evaluation of the immunity test results.

Apparatus shall not become dangerous or unsafe as a result of the application of the tests defined in this standard.

© BSI 12-2000

A functional description and a definition of performance criteria, during or as a consequence of the EMC testing, shall be provided by the manufacturer and noted in the test report, based on the criteria A, B, C defined in EN 50121-1.

NOTE The minimum performance criteria might be a subject to agreement between manufacturer and user.

5 Conditions during testing

It is not always possible to test every function of the apparatus. The tests shall be made at typical operating mode considered by the manufacturer to produce the largest emission or maximum susceptibility to noise as appropriate in the frequency band being investigated consistent with normal applications. The manufacturer shall define the conditions during testing in a test plan.

If the apparatus is part of a system, or can be connected to auxiliary apparatus, then the apparatus shall be tested while connected to the minimum configuration of auxiliary apparatus necessary to exercise the ports in accordance with EN 55022.

The configuration and mode of operation shall be specified in the test plan and the actual conditions, during the tests, shall be precisely noted in the test report.

If the apparatus has a large number of similar ports or ports with many similar connections, then a sufficient number shall be selected to simulate actual operating conditions and to ensure that all the different types of termination are covered (e.g. 20 % of the ports or at least four ports).

The tests shall be carried out within the specified operating range for the apparatus and at its rated supply voltage, unless otherwise indicated in the basic standard.

6 Applicability

The measurements in this standard shall be made on the relevant ports of the apparatus.

It may be determined from consideration of the electrical characteristics, the connection and the usage of a particular apparatus that some of the tests are not applicable (e.g. radiated immunity of induction motors, transformers, ...). In such case the decision not to test has to be recorded in the test plan or test report.

If not otherwise specified the EMC tests shall be type tests.

7 Emission tests and limits

The emission tests and limits for apparatus covered by this standard are given on a port by port basis.

The emission limits for individual equipment within a vehicle are only mandatory for items which are supplied as self contained units and are taken into service or placed upon the market separately from the supply or re-engineering of vehicles.

At the discretion of the system integrator these emission limits may be applied to items of equipment which are not supplied as separate items.

Measurements shall be performed in well-defined and reproducible conditions for each type of disturbance.

The description of the test, the test methods and the test set-up are given in Basic Standards which are referred to in Tables 1 to 6.

The contents of these Basic Standards are not repeated here, however modifications or additional information needed for the practical application of the tests are given in this standard.

NOTE The reference to "Basic Standard" is intended to be limited to those parts of the standard that give the description of the test, the test methods and the test set-up.

© BSI 12-2000

Table 1: Emission - Traction a.c. power ports

Ports	Basic Standard	Frequency range	Limits	Remarks
High voltage connection, input side before filter (port 3 on Figures A.1, A.2 and A.3)		Signalling and telecommunication frequencies	see EN 50121-3-1	
		9 kHz to 30 MHz	No limits See note 1	See note 2

NOTE 1 No conducted radio frequency limits are applied. The apparatus when installed with other surrounding equipment shall satisfy the radiated emission limits of EN 50121-3-1 for trains.

NOTE 2 It is desirable but not possible to apply conducted radio frequency limits. No practical test method exists and the relationship between conducted emissions and radiated emissions is not possible to define.

Table 2: Emission - Traction d.c. power ports

Ports	Basic Standard	Frequency range	Limits	Remarks
High voltage connection, input side before filter (port 3 on Figure A.4)		Signalling and telecommunication frequencies	see EN 50121-3-1	
		9 kHz to 30 MHz	See notes	See notes

NOTE 1 At present there is no agreed method or limits for conducted emissions on the traction supply from 9 kHz to 30 MHz. Limiting conducted emissions from an apparatus connected to the traction supply will prevent excessive radiated emissions from the supply system. A method for measuring conducted emissions is proposed in annex B. Experience in this technique and the relationship between conducted and radiated emissions is necessary in order to progress this standard in the future.

NOTE 2 No conducted radio frequency limits are applied. The apparatus when installed with other surrounding equipment shall satisfy the radiated emission limits of EN 50121-3-1 for trains.

Table 3: Emission - Auxiliary a.c. or d.c. power ports

Ports	Basic Standard	Frequency range	Limits	Remarks
Auxiliary supply sinusoidal a.c. or d.c. (port 9 on Figures A.1, A.2 and A.4.	EN 55011	9 kHz to 150 kHz	No limits	See note 1
		150 kHz to 500 kHz	99 dBμV quasi-peak	See notes 2, 3, 4
		500 kHz to 30 MHz	93 dBμV quasi-peak	See notes 2, 3, 4

NOTE 1 At present there are no limits for conducted emissions from 9 kHz to 150 kHz. Limiting conducted emissions from an apparatus will prevent excessive radiated emissions. Experience in this technique and the relationship between conducted and radiated emissions is necessary in order to progress this standard in the future.

NOTE 2 Wherever applicable the method defined by EN 55011 is to be used. At present the existing method of measuring conducted emissions (EN 55011) has limitations in terms of voltage and current rating of coupling networks. In addition the method of measuring voltage has safety implications for testing high power systems. Limiting conducted emissions from apparatus connected to external cable systems will prevent excessive radiated emissions.

NOTE 3 This requirement refers to the industrial limit values but considering they have been defined to protect radio and TV sets and as the objective is not the same here, the applicable limit for railway applications have been relaxed by 20 dB tobe more representative of potential problems.

NOTE 4 This requirement is not applicable to power ports which are connected to other dedicated, compatible ports.

© BSI 12-2000

Table 4: Emission - Battery referenced ports

Ports	Basic Standard	Frequency range	Limits	Remarks
Battery power supply (port 10 on Figures A.1 to A.5)	EN 55011	9 kHz to 150 kHz	No limits	See note 1
		150 kHz to 500 kHz	99 dBμV quasi-peak	See note 2
		500 kHz to 30 MHz	93 dBμV quasi-peak	See note 2

NOTE 1 At present there are no limits for conducted emissions from 9 kHz to 150 kHz. Limiting conducted emissions from an apparatus will prevent excessive radiated emissions. Experience in this technique and the relationship between conducted and radiated emissions is necessary in order to progress this standard in the future.

NOTE 2 This requirement refers to the industrial limit values but considering they have been defined to protect radio and TV sets and as the objective is not the same here, the applicable limit for railway applications have been relaxed by 20 dB tobe more representative of potential problems.

Table 5: Emission - Process measurement and control ports

Ports	Basic Standard	Frequency range	Limits	Remarks
Electronic supply sinusoidal a.c. or d.c. (port 16 on Figure A.5)	EN 55011	9 kHz to 150 kHz	No limits	See note 1
		150 kHz to 500 kHz	99 dBμV quasi-peak	See note 2
		500 kHz to 30 MHz	93 dBμV quasi-peak	See note 2

NOTE 1 At present there are no limits for conducted emissions from 9 kHz to 150 kHz. Limiting conducted emissions from an apparatus will prevent excessive radiated emissions. Experience in this technique and the relationship between conducted and radiated emissions is necessary in order to progress this standard in the future.

NOTE 2 This requirement refers to the industrial limit values but considering they have been defined to protect radio and TV sets and as the objective is not the same here, the applicable limit for railway applications have been relaxed by 20 dB tobe more representative of potential problems.

Table 6: Emission - Enclosure port

Ports	Basic Standard	Frequency range	Limits	Remarks
Enclosure	EN 55011	30 MHz to 230 MHz	40 dBμV/m quasi-peak measured at 10 m distance	See notes
		230 MHz to 1 GHz	47 dBμV/m quasi-peak measured at 10 m distance	See notes

NOTE 1 A measurement distance of 3 m may be used with the limit increased by 10 dB.

NOTE 2 Traction converters and auxiliary converters over 50 kVA shall not be tested individually but when the vehicle is tested as a whole in accordance with EN 50121-3-1.

8 Immunity tests and limits

The immunity tests and limits for apparatus covered by this standard are given on a port by port basis.

To ensure the immunity of the complete vehicle the limits shall be applicable to all relevant apparatus.

Tests shall be conducted in well-defined and reproducible manner.

The tests shall be carried out as single tests in sequence. The sequence of testing is optional.

© BSI 12-2000

The description of the test, the test generator, the test methods and the test set-up are given in Basic Standards which are referred to in Tables 7 to 9.

The contents of these "Basic Standards" are not repeated here, however modifications or additional information needed for the practical application of the tests are given in this standard.

Table 7: Immunity - Battery referenced ports (except at the output of energy sources), auxiliary a.c. power input ports (rated voltage ≤ 400 V_{rms})

	Environmental phenomena	Basic Standard	Severity	Performance criteria	Remarks
7.1	Fast transients bursts	EN 61000-4-4	2 kV 5/50 ns Tr/Th 5 kHz rep frequency	A	See note 1
7.2	Surges	EN 50155	1,8 kV waveform 5/50 µs Source impedance 100 Ω	B	
7.3	Conducted radio frequency	EN 61000-4-6	3 V_{rms} (carrier voltage) 150 kHz to 80 MHz 1 kHz, 80 % AM Source impedance 150 Ω	A	See note 2
7.4	Variations and interruptions of voltage supply	EN 50155	Refer to EN 50155	A	

NOTE 1 Direct coupling, positive and negative polarity.
NOTE 2 In applications where cables cross between cars (e.g. train communications) a severity level of 10 V_{rms} shall be used.

Table 8: Immunity - Signal and communication, process measurement and control ports

	Environmental phenomena	Basic Standard	Severity	Performance criteria	Remarks
8.1	Fast transients bursts	EN 61000-4-4	2 kV 5/50 ns Tr/Th 5 kHz rep frequency	A	See note 1
8.2	Conducted radio frequency	EN 61000-4-6	3 V_{rms} (carrier voltage) 150 kHz to 80 MHz 1 kHz, 80 % AM Source impedance 150 Ω	A	See note 2

NOTE 1 Capacitive coupling, positive and negative polarity.
NOTE 2 In applications where cables cross between cars (e.g. train communications) a severity level of 10 V_{rms} shall be used.

Table 9: Immunity - Enclosure ports

	Environmental phenomena	Basic standard	Severity	Performance criteria	Remarks
9.1	Radio frequency	EN 61000-4-3	10 V/m (rms carrier voltage) 80 MHz to 1 GHz 1 kHz, 80 % AM	A	See notes 1 and 3
9.2	Electrostatic discharge	EN 61000-4-2	6 kV contact discharge 8 kV air discharge	B	See note 2

NOTE 1 For equipment mounted in the passenger compartments, drivers cab or external to the rolling stock (roof, underframe) a severity level of 20 V/m shall be used to allow for the more prevalent use of mobile transmitters.

NOTE 2 Only applicable to equipment accessible to passengers and operational staff (not maintenance).

NOTE 3 For large apparatus (e.g. traction drives, auxiliary converters) it is often not practical to perform the immunity test to radiated electromagnetic fields on the complete unit. In such cases the manufacturer should test susceptible sub-systems (e.g. control electronics). The test report should justify the selection or not of sub-systems and any assumptions made (e.g. reduction of field due to case shielding).

© BSI 12-2000

Annex A (informative)

Examples of apparatus and ports

The purpose of this annex is to provide examples of the different types of rolling stock apparatus together with their ports. Examples of apparatus which may be placed on the market as a single commercial unit are given in Table A.1. However these apparatus may also form a sub-system in a larger apparatus (e.g. control electronics in an auxiliary converter). In this case the requirements of the standard apply only to the apparatus which is placed on the market. A port is defined in the standard as the interface of an apparatus with the external environment. The matrix in the table indicates whether the particular apparatus is relevant to emission, immunity or neither. This guidance is offered for the benefit of users of this standard, but it is not intended to be definitive. It is for the user of the standard to make the necessary technical judgements in determining whether or not a test is applicable.

The drawings on the following figures clarify the most essential ports. They show examples of different arrangements.

Figure A.1 applies for an a.c. fed loco with a.c. traction drive and psophometric filter on the line side.

Figure A.2 shows another a.c./a.c. system with power factor correction filter on the converter side and with d.c. or three-phase auxiliary and train power supply.

Figure A.3 shows a more conventional system with a.c. input and d.c. traction motors fed by phase control converter.

Figure A.4 is a d.c. fed system with a.c. traction drive.

Figure A.5 shows some additional ports of converter and control electronics.

Of course, many other different system arrangements are possible.

Table A.1 Typical examples of apparatus

Apparatus	Test requirements
Traction converter	Emission and immunity
Main circuit breaker	No test requirements
Traction transformers	No test requirements
Traction motor	No test requirements
Auxiliary motor	No test requirements
d.c. auxiliary supply (battery)	Emission and immunity
Electronic control supply	Emission and immunity
Signalling and communication equipment	Emission and immunity
Electronic man-machine interface	Emission and immunity
Environmental conditioning equipment	Emission and immunity
Passenger information equipment	Emission and immunity
Door control	Emission and immunity
Auxiliary equipment for train operation	Emission and immunity
Auxiliary equipment for passenger services	Emission and immunity
Train management systems	Emission and immunity
Electronic power supply	Emission and immunity
Braking control system	Emission and immunity

In Tables 1 to 9 tests are specified for application to a specific port (interface of an apparatus). Table A.2 lists some more typical descriptions used for these ports and the type of apparatus which may have such a port. Examples of these ports are given in the accompanying figures except for ports No. 13 and 14.

© BSI 12-2000

Table A.2: Typical port descriptions

Port No. on figures	Typical port name	Typical apparatus
	Traction a.c. power ports	
1	Pantograph line terminal	Main circuit breaker
3	High voltage connection (before filter)	Filter
4	Connection filter-transformer, HV side	Filter
5	Train power line single phase	Auxiliary converter
6	Connection transformer-converter	Propulsion converter
7	Traction motor cables	Traction motors
8	Auxiliary feed windings of transformer	d.c. auxiliary supply
	Traction d.c. power ports	
2	d.c. conductor input	Main circuit breaker
3	High voltage connection (before filter)	Filter
6	Connection filter-converter	Propulsion converter
7	Traction motor cables	Traction motors
	Auxiliary a.c. ports	
9	Auxiliary a.c. supply	Environmental conditioning equipment
	Auxiliary d.c. ports	
9	Auxiliary d.c. supply	
	Battery referenced ports	
10	Battery power supply	Electronic power supply
11	Train control bus (conventional battery voltage)	Train management system
19	Relay logic input/output	Electronic control system
	Signal and communication ports	
12	Database within vehicle	Electronic control system
13	Database within train	Train management system
14	Passenger entertainment network	Passenger entertainment equipment
15	Firing control line	Electronic control system
17, 18	Sensor/transducer signal (digital or analogue)	Electronic control system
20	Communication interface (maintenance)	Electronic control system
	Process measurement and control ports	
16	Internal electronic supply	Electronic control system
18	Sensor/transducer signal (analogue)	Electronic control system
	Enclosure port	
21	Equipment enclosure	All apparatus
	Earth port	
22	Earth connection	All apparatus

© BSI 12-2000

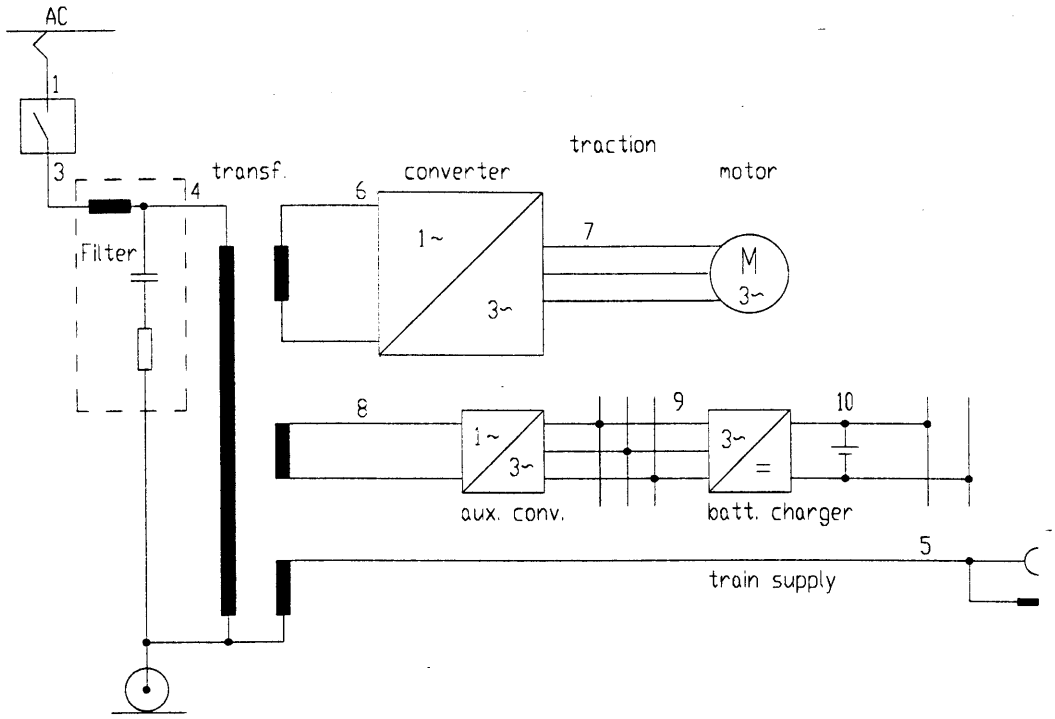

Figure A.1: a.c. fed loco with a.c. traction drive and psophometric filter on the line side

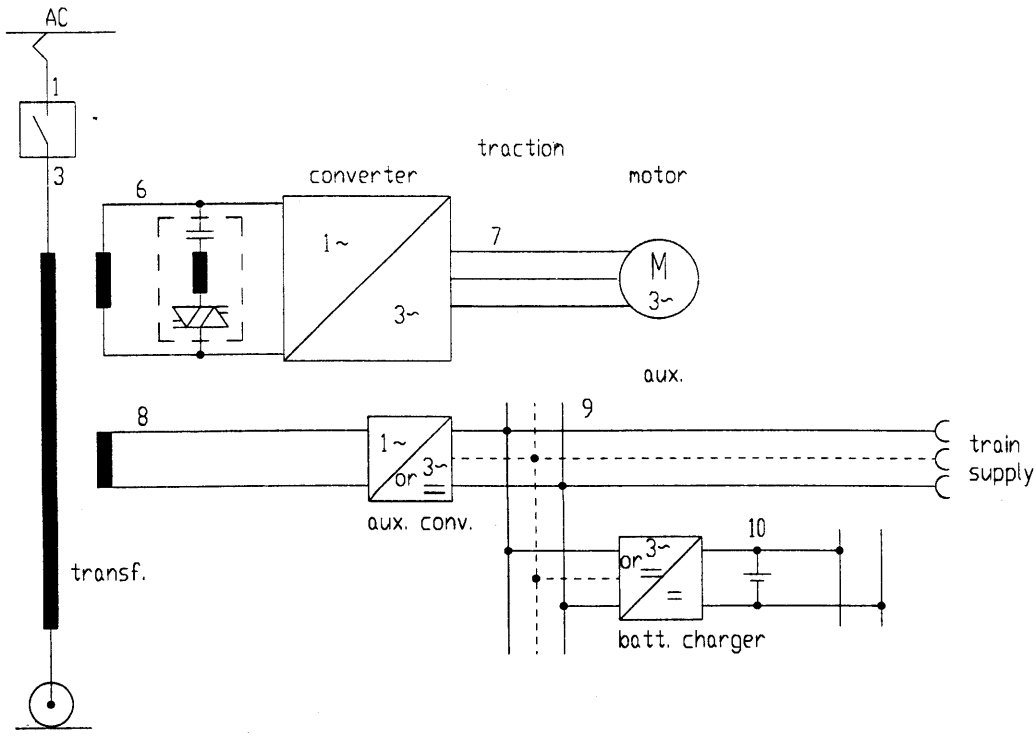

Figure A.2: a.c./a.c. system with power factor correction filter on the converter side and with d.c. or three-phase auxiliary and train power supply

© BSI 12-2000

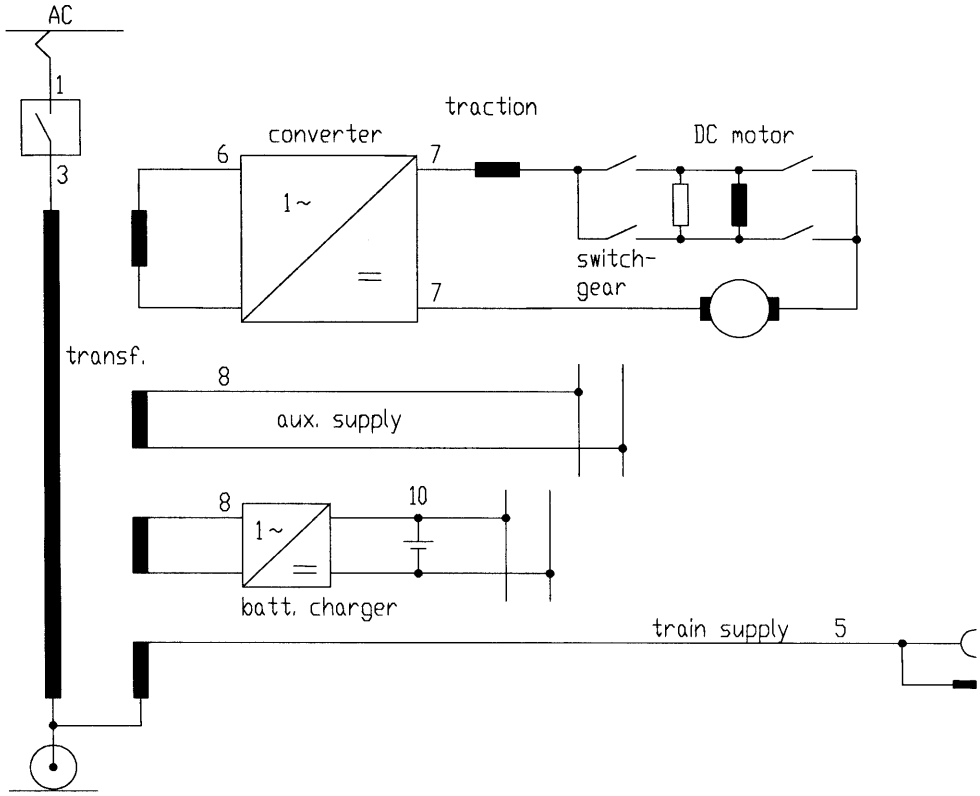

Figure A.3: Conventional system with a.c. input and d.c. traction motors fed by phase control converter

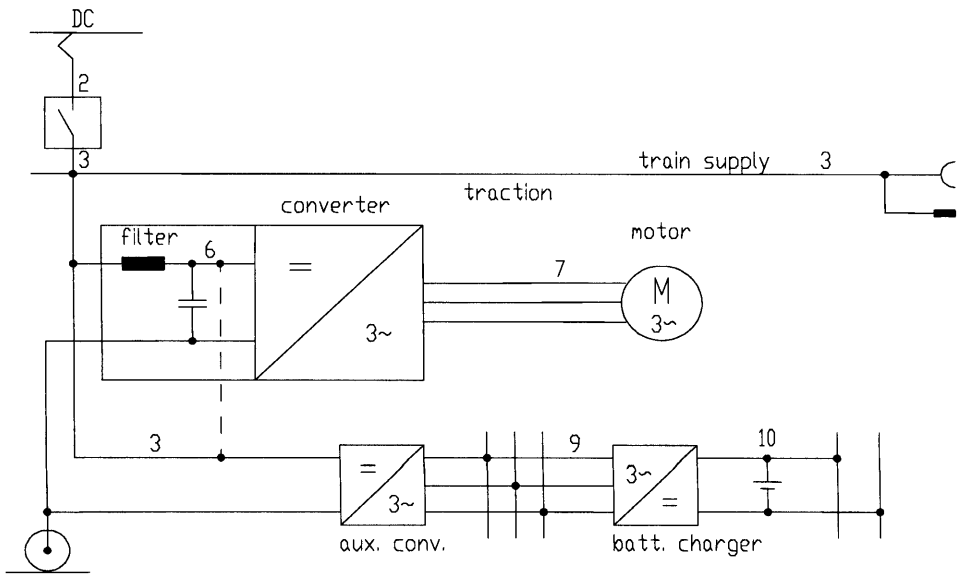

Figure A.4: d.c. fed system with a.c. traction drive

© BSI 12-2000

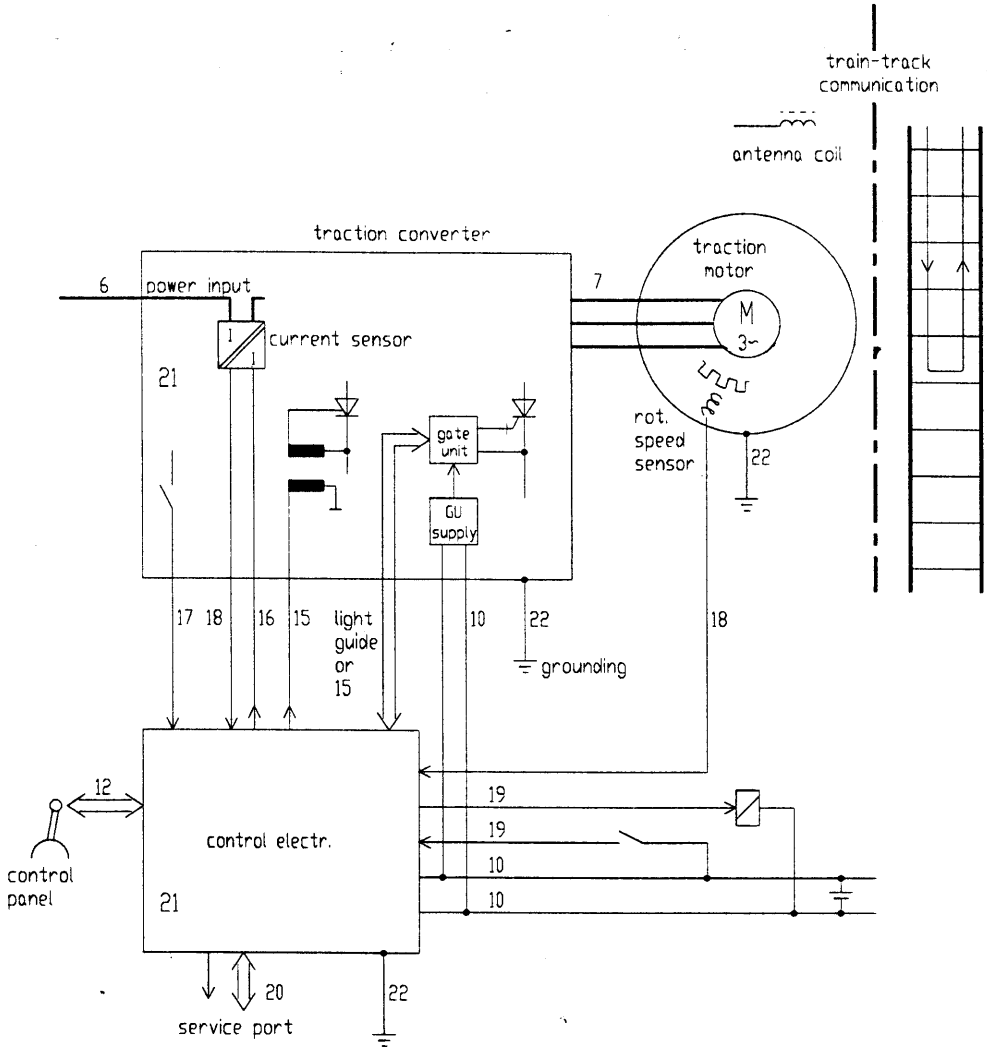

Figure A.5: Additional ports of converter and control electronics

Annex B (informative)

Conducted disturbances generated by power converters in the range of 9 kHz to 30 MHz

B.1 Scope

This procedure concerns switched mode power conversion devices connected to the main traction d.c. port (catenary or conductor rail) via or not a main line filter.

B.2 Measuring method

The measurements should be carried out using the CISPR 16 recommendations. The following adjustments should be set:

- 200 Hz 6 dB bandwidth, in the range 9 kHz to 150 kHz;
- 9 kHz 6 dB bandwidth, in the range 150 kHz to 30 MHz;
- Quasi-peak detection with appropriate weighting for each frequency range.

Care should be taken of possible saturation caused by the main current which may affect the probe transfer characteristics. Correct impedance matching should be ensured from the probe to the measuring apparatus.

B.3 Test procedure

The organization of the test is presented in Figure B.1 with appropriate recommendations.

The common mode impedance and grounding conditions should be as close as possible to the actual conditions on both input and output of the converter.

The levels should be measured for each measuring point and for each working condition recognized as providing the maximum disturbing currents.

B.4 Limits

No conducted radio frequency limits are applied. The apparatus when installed with other surrounding equipment must satisfy the radiated emission limits of EN 50121-3-1 for trains. This test is offered to qualify the emission of apparatus, e.g. for data sheets.

© BSI 12-2000

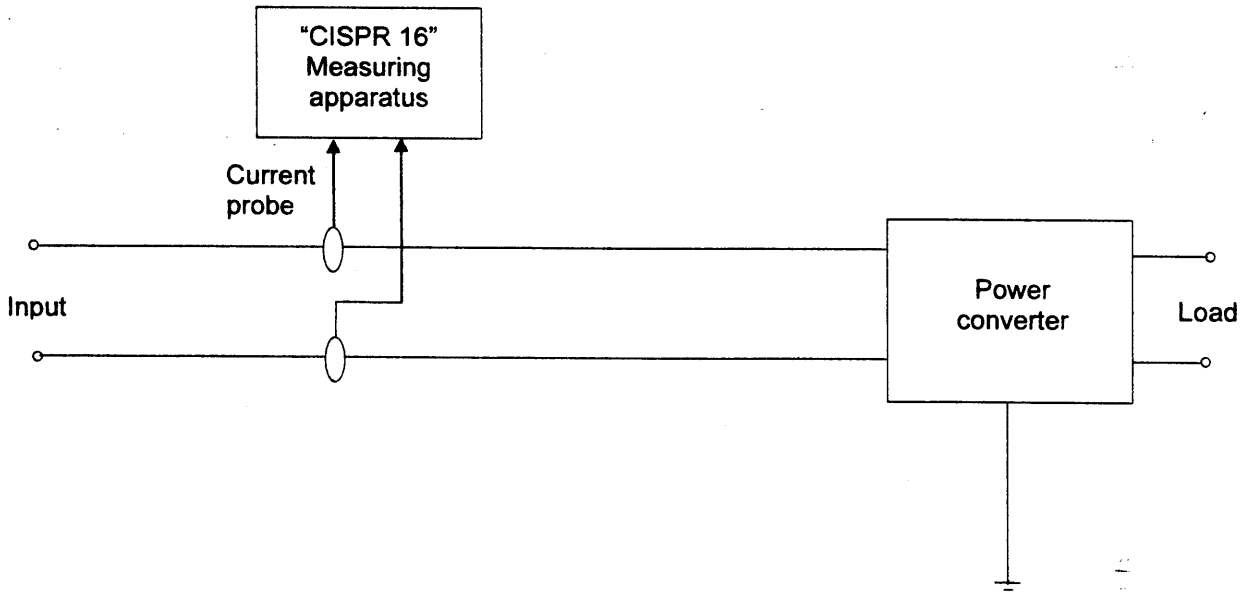

Figure B.1: Test set-up

© BSI 12-2000

blank

BSI — British Standards Institution

BSI is the independent national body responsible for preparing British Standards. It presents the UK view on standards in Europe and at the international level. It is incorporated by Royal Charter.

Revisions

British Standards are updated by amendment or revision. Users of British Standards should make sure that they possess the latest amendments or editions.

It is the constant aim of BSI to improve the quality of our products and services. We would be grateful if anyone finding an inaccuracy or ambiguity while using this British Standard would inform the Secretary of the technical committee responsible, the identity of which can be found on the inside front cover. Tel: 020 8996 9000. Fax: 020 8996 7400.

BSI offers members an individual updating service called PLUS which ensures that subscribers automatically receive the latest editions of standards.

Buying standards

Orders for all BSI, international and foreign standards publications should be addressed to Customer Services. Tel: 020 8996 9001. Fax: 020 8996 7001.

In response to orders for international standards, it is BSI policy to supply the BSI implementation of those that have been published as British Standards, unless otherwise requested.

Information on standards

BSI provides a wide range of information on national, European and international standards through its Library and its Technical Help to Exporters Service. Various BSI electronic information services are also available which give details on all its products and services. Contact the Information Centre. Tel: 020 8996 7111. Fax: 020 8996 7048.

Subscribing members of BSI are kept up to date with standards developments and receive substantial discounts on the purchase price of standards. For details of these and other benefits contact Membership Administration. Tel: 020 8996 7002. Fax: 020 8996 7001.

Copyright

Copyright subsists in all BSI publications. BSI also holds the copyright, in the UK, of the publications of the international standardization bodies. Except as permitted under the Copyright, Designs and Patents Act 1988 no extract may be reproduced, stored in a retrieval system or transmitted in any form or by any means – electronic, photocopying, recording or otherwise – without prior written permission from BSI.

This does not preclude the free use, in the course of implementing the standard, of necessary details such as symbols, and size, type or grade designations. If these details are to be used for any other purpose than implementation then the prior written permission of BSI must be obtained.

If permission is granted, the terms may include royalty payments or a licensing agreement. Details and advice can be obtained from the Copyright Manager. Tel: 020 8996 7070.

BSI
389 Chiswick High Road
London
W4 4AL