Vapor Stone
RAIL SYSTEMS
A Wabtec company

10 655 Henri-Bourassa Blvd., West
Saint-Laurent (Québec) Canada
H4S 1A1

Tel: 514.335.4200
Fax: 514.335.4231

www.wabtec.com

Regional Transportation District

RTD Denver EMU

Project # 7230

Door System

Software Verification and Validation Plan (SVVP)

Contract Number	-	CDRL Number	-
		Customer Ref. Number	-

NOTICE
Plans, specifications and engineering data submitted herewith or which may be submitted, remain the property of Vapor Stone Rail Systems and shall not be reproduced or altered or used in whole or in part except by express consent of VSRS.

AVIS
Les plans, spécifications et données techniques soumis ci-joints, ou qui peuvent être soumis, restent la propriété de Vapor Stone Rail Systems et ne doivent pas être reproduits, altérés ou utilisés, totalement ou partiellement, sans le consentement express de VSRS.

	Name / Title	Signature / Date
Prepared :	José Trejo Software Designer	Jose Emanuel Trejo de la Torre · 2011-06-17
Verified :	Martin Ouellet, Eng. Software Department Supervisor	Marico Ferraic for Martin Ouellet 2011-06-17
Approved :	Aldo Di Rocco Project Manager	2011-06-17

Document No.	201111254	Revision	0
		Date (yyyy-mm-dd)	2011-06-10

Based on SVVP Template S17-13

Change History

Rev.	ECD #	Date	By	Description of changes
0	---	2011-06-10	José Trejo	Original issue.

Preface

This Software Verification and Validation Plan (SVVP) complies with the requirements of the IEEE Std. 1012-2004, IEEE 1558-2004 and EN 50128.

This document is being submitted to fulfill the requirements of Regional Transportation District, and Hyundai Rotem contract.

Vapor Stone Rail Systems
10655, Henri-Bourassa West
St-Laurent, QC, CANADA, H4S 1A1
ph. 514-335-4200
http://www.vaporrail.com/

Table of Contents

Change History 2
Preface 3
Table of Contents 4
List of Figures 6
List of Tables 6

1 PURPOSE AND SCOPE 7

1.1 Purpose 7
1.2 Scope 7
1.3 Software Configuration Items Covered 7
1.4 Maintenance 7

2 REFERENCED DOCUMENTS 8

3 DEFINITIONS AND ACRONYMS 10

3.1 Definitions 10
3.2 Acronyms 12

4 V&V OVERVIEW 13

4.1 Organization 13
4.1.1 Authority 14
4.2 Master Schedule 14
4.3 Software Integrity Level Scheme 18
4.4 Resources Summary 18
4.5 Responsibilities 18
4.5.1 Authority 20
4.6 Tools, Techniques, and Methods 20
4.6.1 Tools 20
4.6.2 Techniques 22
4.6.3 Methodologies 23

5 V&V PROCESSES 24

5.1 Management 24
5.1.1 Management of V&V Activities 24
5.1.1.1 Tasks 24
5.1.1.2 Methods and Criteria 24
5.1.1.3 Inputs and Outputs 24
5.2 Acquisition 27
5.2.1 Acquisition Support V&V Activities 27
5.3 Supply 27
5.3.1 Planning Supply V&V Activities 27
5.4 Development 28
5.4.1 Concept V&V Activities 28
5.4.1.1 Tasks 28
5.4.1.2 Methods and Criteria 28
5.4.1.3 Inputs and Outputs 28
5.4.2 Requirements V&V Activities 31
5.4.2.1 Tasks 31
5.4.2.2 Methods and Criteria 31
5.4.2.3 Inputs and Outputs 31
5.4.3 Design V&V Activities 36
5.4.3.1 Tasks 36
5.4.3.2 Methods and Criteria 36

5.4.3.3 Inputs and Outputs 36
5.4.4 Implementation V&V Activities 41
5.4.4.1 Tasks 41
5.4.4.2 Methods and Criteria 41
5.4.4.3 Inputs and Outputs 41
5.4.5 Test V&V Activities 46
5.4.5.1 Tasks 46
5.4.5.2 Methods and Criteria 46
5.4.5.3 Inputs and Outputs 46
5.4.6 Installation and Checkout V&V Activities 48
5.4.6.1 Tasks 48
5.4.6.2 Methods and Criteria 48
5.4.6.3 Inputs and Outputs 48
5.5 Operation 49
5.5.1 Operation V&V Activities 49
5.5.1.1 Tasks 49
5.5.1.2 Methods and Criteria 49
5.5.1.3 Inputs and Outputs 49
5.6 Maintenance 50
5.6.1 Maintenance V&V Activities 50
5.6.1.1 Tasks 50
5.6.1.2 Methods and Criteria 50
5.6.1.3 Inputs and Outputs 50

6 V&V REPORTING REQUIREMENTS ____ 52

7 V&V ADMINISTRATIVE REQUIREMENTS ____ 53

7.1 Anomaly Resolution and Quality IAR Database. 53
7.2 Task Iteration Policy 53
7.3 Deviation Policy 54
7.4 Control Procedures 54
7.5 Standards, Practices, and Conventions 54

8 V&V DOCUMENTATION REQUIREMENTS ____ 55

List of Figures

Figure 4-1: V&V Organizational Relationship 13
Figure 4-2: Project Milestones. 14

List of Tables

Table 1-1: SCI Categorization 7
Table 4-1: V&V Milestones 15
Table 4-2: SIL-HRI Correspondence Table 18
Table 4-3: SCI Software Integrity Level 18
Table 4-4: V&V Responsibilities 20
Table 5-1: Management of V&V Activities 25
Table 5-2: Concept V&V Activities 29
Table 5-3: Requirements V&V Activities 32
Table 5-4: Design V&V Activities 37
Table 5-5: Implementation V&V Activities 42
Table 5-6: Test V&V Activities 47
Table 5-7: Installation and Checkout V&V Activities 48
Table 5-8: Operation V&V Activities 49
Table 5-9: Maintenance V&V Activities 51
Table 8-1: V&V Documentation Requirements 55

1 PURPOSE AND SCOPE

1.1 Purpose

This document, the Software Verification and Validation Plan (SVVP), is prepared by Vapor Stone Rail Systems (hereafter referred to as VSRS), in accordance with the requirement of the Regional Transportation District authority for the 7230 Denver project.

The purpose of this document is to develop formal procedures for the Verification and Validation of the development process as well as the software configuration items identified in Table 1-1. Implementation of these procedures will deal with and meet their individual requirements, specifications and needs. This plan will document these procedures.

The intended audience of this document includes VSRS management, development and testing teams, Rotem and RTD.

1.2 Scope

The scope of this SVVP covers all the V&V activities that shall be performed throughout the life cycle of the project for the DCU Application.

Note that the project development activities, work products, milestones, resources, and schedules can be found in Section 4, as well as Appendix A of Software Project Management Plan (SPMP) #201111207.

1.3 Software Configuration Items Covered

Table 1-1 (extracted from the SPMP document #201111207) lists all the configuration items applicable to the Side Door System and identifies the software configuration items covered by this SVVP.

Table 1-1: SCI Categorization

VSRS SCI Part#	SCI Nomenclature	SIL Level	Covered In
2010L0226	DCU Application	2	**This document**
2010L0227	DCU Neuron Gateway Application	2	**This document**
2010L0228	DCU Boot Loader Application	0	SIL0 not applicable
2010L0229	PTU Application	0	SIL0 not applicable
2010L0039	CPLD Binary File	2	Hardware / not applicable

1.4 Maintenance

The Maintenance process consists of all activities related to modifying the software product (i.e. code and documentation) due to a problem, a need for improvement or adaptation during the operation process. For additional information about the maintenance process and maintenance V&V activities, please refer to Section 5.6 of this SVVP.

2 REFERENCED DOCUMENTS

This section lists the number, title, revision, date, and source of all documents referenced in this SVVP.

Standards

IEEE Std 730-2002	IEEE Standards for Software Quality Assurance Plans, 23 September 2002, IEEE, www.ieee.org
IEEE Std 828-1998	IEEE Standards for Software Configuration Management Plans, 25 June 1998, IEEE, www.ieee.org
IEEE Std 829-1998	IEEE Standards for Software Test Documentation, 16 September 1998, IEEE, www.ieee.org
IEEE Std 830-1998	IEEE Recommended Practice for Software Requirements Specification, 25 June 1998, IEEE, www.ieee.org
IEEE Std 1012-2004	IEEE Standards for Software Verification and Validation, 8 June 2005, IEEE, www.ieee.org
IEEE Std 1016-2009	IEEE Recommended Practice for Software Design Description, 20 July 2009, IEEE, www.ieee.org
IEEE Std 1058-1998	IEEE Standards for Software Project Management Plans, 8 December 1998, IEEE, www.ieee.org
IEEE Std 1063-2001	IEEE Standards for Software User Documentation, 20 December 2001, IEEE, www.ieee.org
CMU/SEI-2006-TR-008	CMMI® for Development, Version 1.2, August 2006, Software Engineering Institute, Carnegie Mellon University, www.sei.cmu.edu
EN 50128	Railway applications- Communications and processing systems – Software for railway control and protection systems, 2001.

VSRS Documents

CMM-01	Software Engineering Process, Rev.3, 2001-03-31
CMMI-02	Software Engineering Policy Manual, Rev. 1, 2008-07-18
SWI-02	Coding Standard Guide, Rev.3, 2001-03-27
SWI-05	Inspection Guide, Rev.3, 2001-03-27
SWI-06	Code Walkthrough Guide, Rev.1, 2000-03-03
SWI-07	Lessons Learned Guide, Rev.1, 2000-03-03
SWI-08	SPRM Guide, Rev.2, 2000-03-03
SWI-13	SQA Guide, Rev.3, 2000-08-23
SWI-16	Risk Guide, Rev.2, 2000-03-03
S01-01	Software Problem Report Form, Rev.1, 2001-03-30
S05-01	Inspection Form, Rev.2, 2000-01-30
S05-02 to S05-15 (except S05-07 and S05-12)	Documentation Inspection Checklist Template, Rev.1, 2003-02-20
S06-01	Code Walkthrough Form, Rev.1, 2001-01-30

S13-01	Audit Notification, Rev.1, 1999-01-08
S13-02	Improvement Action Request Form, Rev.1.1, 2001-01-30
S13-04 to S13-09	Audit Checklist Template, Rev.1, 2003-05-29
S16-01	Risk Form, Rev.2.1, 2000-01-01
S17-01	Software Requirements Specification Template, Rev.0, 2002-01-15
S17-02	Software Project Management Plan Template, Rev.1, 2003-02-11
S17-03	Software Quality Assurance Plan Template, Rev.1, 2003-02-11
S17-04	Software Configuration Management Plan Template, Rev.2, 2003-02-14
S17-06	Software Requirements Traceability Matrix Template, Rev.1, 2003-02-19
S17-07	Software Design Description Template, Rev.1, 2003-02-19
S17-08	Software Test Plan Template, Rev.2, 2002-01-15
S17-10	Software Test Procedure Template, Rev.2, 2002-01-15
S17-11	Software Version Description Template, Rev.1, 2002-01-25
S17-12	Software User Documentation Template, Rev.1, 2001-02-27
S17-13	Software Verification and Validation Plan Template, Rev.1, 2003-02-11
S17-14	Software Verification and Validation Report Template, Rev.2, 2003-02-19
EWI-006	Document Control, File Naming Methodology, Rev.2, 2000-05-26
201111207	Software Project Management Plan, 7230 Denver, Side Door System, Rev.1, 2011-04-29
201111208	Software Quality Assurance Plan, 7230 Denver, Side Door System, Rev.1, 2011-05-31
201111186	Software Configuration Management Plan, 7230 Denver, Side Door System, Rev.1, 2011-06-02
201111188	Failure Modes, Effects and Criticality Analysis (FMECA), 7230 Denver, Side Door System, Unreleased
201111185	RTD Denver EMU, Project # 7230, Door System System Functional Description, Rev 01, 2011-04-29
SPRM 02 2011-04-29	Software Project Review Meeting.

Hyundai Rotem Documents

REDE112784	PTS Entrance Door for Denver Eagle P3 Project, Rev. 3, 2011-01-13

RTD Denver Documents

RFP No. 18FH012	RTD FasTracks Request for Proposal, 2009-09-30

3 DEFINITIONS AND ACRONYMS

Definitions and acronyms listed below establish meaning in the context of this SVVP.

3.1 Definitions

Configuration Management: A discipline applying technical and administrative direction and surveillance to: identify and document the functional and physical characteristics of a configuration item, control changes to those characteristics, record and report change processing and implementation status, and verify compliance with specified requirements.

Controlled Document: A baseline document upon which subsequent development is based.

Documentation: (1) A collection of documents on a given subject. (2) Any written or pictorial information describing, defining, specifying, reporting, or certifying activities, requirements, procedures, or results. (3) The process of generating or revising a document. (4) The management of documents, including identification, acquisition, processing, storage, and dissemination.

External Interface: All interfaces (shared boundaries) between a software product and its environment. The human and application interfaces define how the functions of the software product are invoked, whereas the communications, hardware, and other interfaces specify the software product's usage of the system components (products).

Inspection: A static analysis technique that relies on visual examination of development products to detect errors, violations of development standards, and other problems. Types include code inspection and design inspection.

Milestone: A scheduled event for which a project member or manager is held accountable and that is used to measure progress; for example, a formal review, issuance of a specification, or product delivery.

Process: (1) A sequence of steps performed for a given purpose; for example, the software development process. (2) An executable unit managed by an operating system scheduler. (3) To perform operations on data.

Quality Assurance: A planned and systematic set of all actions necessary to provide adequate confidence that the item or product conforms to the established technical and quality requirements.

Requirement: A condition or capability that must be met or possessed by a system or system component to satisfy a contract, standard, specification, or other formally imposed document. The set of all requirements forms the basis for subsequent development of the system or system component.

Review: A process or meeting during which a work product, or set of work products, is presented to project personnel, managers, users, customers, or other interested parties for comment or approval. Types include code review, design review, formal qualification review, requirements review and test readiness review.

Software: Computer programs, procedures, and possibly associated documentation and data pertaining to the operation of a computer system.

Software Configuration Item (SCI): An aggregation of software, typically an aggregate of two or more software components, which is designated for configuration management and treated as a single entity in the configuration management.

Software Designers: Trained professionals involved in the engineering of software products (Analysis/Design/Implementation), and familiar with VSRS Quality System Procedures.

Software Engineering: The systematic approach to the development, operation, maintenance, and retirement of the software.

Software Item: A software product, or a logically separable part of it.

Software Product: (1) The complete set of computer programs, procedures, and possibly associated documentation and data designated for delivery to a user. (2) Any of the individual items in (1).

Software Test Report: A document summarizing testing activities and results. It also contains an evaluation of the corresponding test items.

System: A collection of components organized to accomplish a specific function or set of functions.

System Software: Software designed for a specific computer system or family of computer systems to facilitate the operation and maintenance of the computer system and associated programs, for example, operating systems, compilers and utilities. (Contrast with application software.)

Test: A set of one or more test cases and test procedures.

Test Case: A set of test inputs, execution conditions, and expected results developed for a particular objective, such as to exercise a particular program path or to verify compliance with a specific requirement.

Test procedure: Detailed instructions for the set up, operation, and evaluation of results of a given test.

User: Person or application interacting with the software product.

User Documentation: Documentation conveying to the end user of product instructions for using the product to obtain desired results. Software User Documentation (SUD) is a part of the user documentation (contrast with product documentation).

Validation: The process of evaluating a system or component during or at the end of the development process to determine whether it satisfies specified requirements.

Verification: (1) The process of evaluating a system or component to determine whether the products of a given development phase satisfy the conditions imposed at the start of that phase. (2) Formal proof of program correctness.

Version: Labeling of a configuration item, either electronically or manually, whenever this item changes.

3.2 Acronyms

CBTC	Communication-Based Train Control
CMM	Capability Maturity Model
CMMI	Capability Maturity Model Integration
CPLD	Complex Programmable Logic Device
CTP	Component Test Plan
CTPS	Component Test Procedure Specification
DCU	Door Control Unit
DTCR	Date and Time Compliance Report
FAI	First Article Inspection
FCA	Functional Configuration Audit
CDR	Critical Design Review also called FDR
FDR	Final Design Review
FDRL	Contract Data Requirements List
FMECA	Failure Modes, Effects and Criticality Analysis
HRI	Hazard Risk Index
HW	Hardware
IAR	Improvement Action Request
ICD	Interface Control Document
IDD	Interface Design Description
IEEE	Institute of Electrical and Electronics Engineers
IRS	Interface Requirements Specifications
ITP	Integration Test Plan
ITPS	Inegration Test Procedure Specification
ITR	Integration Test Report
IV&V	Independent Verification and Validation
MDC	Master Door Controller
MoM	Minutes of Meeting
N/A	Not Applicable
NYCT	New-York City Transit
PCA	Physical Configuration Audit
PDR	Preliminary Design Review
PM	Program Management (Manager)
PRM	Project Review Meeting
PTE	Portable Test Equipment
RTD	Regional Transport District
RTM	Requirements Traceability Matrix
SCCB	Software Configuration Control Board
SCI	Software Configuration Item
SCM	Software Configuration Management (Manager)
SCMP	Software Configuration Management Plan
SCT	Software Coding and Testing
SD	Software Development
SDD	Software Design Description
SDP	Software Development Process
SDS	Software Department Supervisor
SDT	Software Development Tracking
SEI	Software Engineering Institute
SEP	Software Engineering Process
SEPG	Software Engineering Process Group
SFD	System Functional Description
SIL	Software Integrity Level
SITP	Software Integration Test Plan
SITPS	Software Integration Test Procedure Specification
SPG	Software Plan Generation
SPMP	Software Project Management Plan
SPP	Software Project Planning
SPR	Software Problem Report
SPRM	Software Project Review Meeting
SQA	Software Quality Assurance (Agent)
SQAP	Software Quality Assurance Plan
SRD	Software Requirements Definition
SRS	Software Requirements Specification
SRTM	Software Requirements Traceability Matrix
STL	Software Team Leader
SUD	Software User Documentation
SVD	Software Version Description
SVTP	Software Validation Test Plan
SVVP	Software Verification and Validation Plan
SVVR	Software Verification and Validation Report
SW	Software
SWE	Software Engineering (Engineer)
SWI	Software Work Instruction
SyTR	System Test Report
TBD	To Be Defined
V&V	Verification and Validation
VSRS	Vapor Stone Rail System
WBS	Work Breakdown Structure
WI	Work Instruction

4 V&V OVERVIEW

This section describes the organization, schedule, Software Integrity Level (SIL) scheme, resources, responsibilities, tools, techniques and methods to perform the software V & V tasks.

4.1 Organization

The SVVP issued by VSRS, is used in conjunction with the 7230 Denver project's SPMP, SQAP and SCMP to ensure that each phase of the software development life cycle is satisfied and completed, and that each software work product meets its specification and requirements.

All the work products/deliverables will be quality-checked or inspected according to the customer requirements and standards before releasing to the customer. The inspectors shall be the people who are not authors/developers of the work products to be inspected. These inspectors may be within or outside the software group. Actual software integration testing will be performed jointly by the software developers and the test team.

Figure 4-1 represents the relationship of the V&V processes to other processes such as development, project management, quality assurance and configuration management.

For information about the authority for resolving issues raised by the V&V tasks and for approving V&V products, please refer to Section **4.5.1**.

Figure 4-1: V&V Organizational Relationship

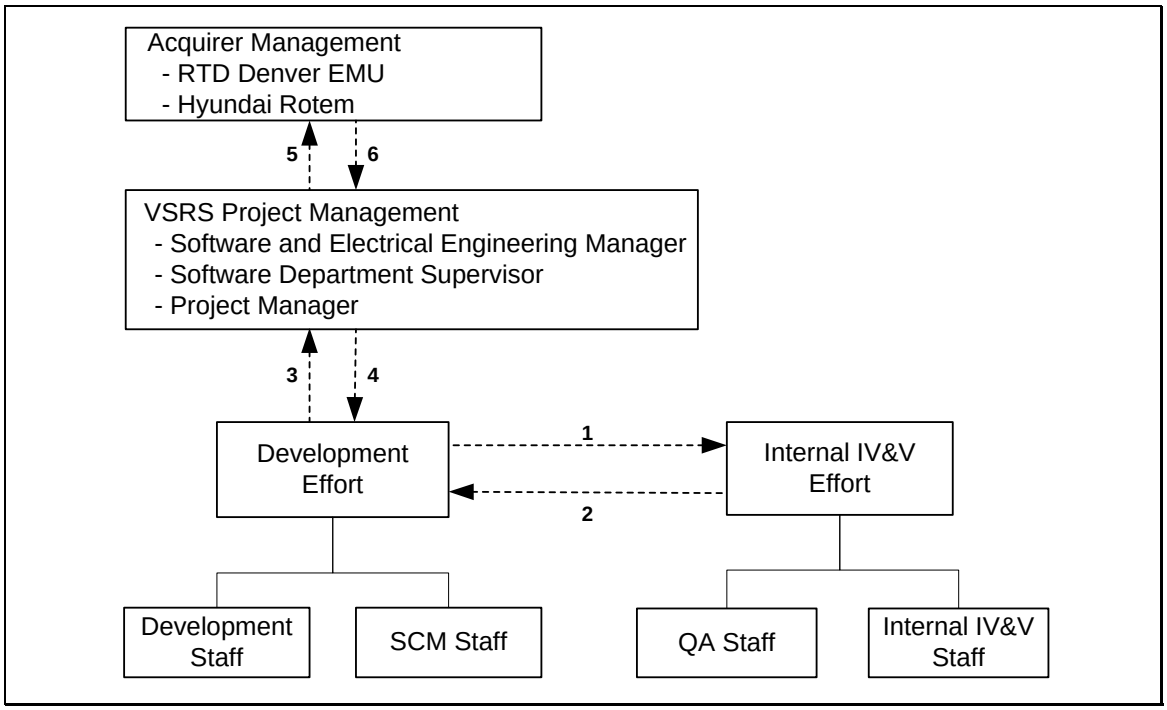

The connection arrows represent the flow of control and data defined as following:

1. Submittal of SCI documentation (concept, requirements, design, test, schedule and development plan) and source code.
2. Quality assurance and technical inspections of documentation and code walkthrough of source code. Submittal of V&V tasks results, anomalies, activities summary reports.
3. Submittal of SCI documentation (concept, requirements, design, test, schedule and development plan) and software status.
4. Approval, denial and recommendations on development issues, V&V issues and deliverables.
5. Submittal of software documentation for final approval.

6. Approval, denial and recommendations on V&V issues and deliverables.

4.1.1 Authority

The Program Manager, the Software Department Supervisor and the SQA will have joint authority to formally accept an item subject to V&V. Such approval will not be given until all requirements of the V&V process have been compiled. This includes the use of checklist and reviews as well as SCM activities referred in the project's SQAP and SCMP.

4.2 Master Schedule

The details of the software project schedule can be found in Appendix A of the SPMP document #201111207. The SPMP identifies activities, resources, and tools required for the software project as per CMMI level 2. It covers the following life cycle phases of the Software Development Process:

SPP-200:	Software Project Planning
SPG-300:	Software Plan Generation
SRD-400:	Software Requirements Definition
SD-500:	Software Development
SCT-600:	Software Coding and Testing
SV-700:	Software Validation
SDT-800:	Software Development Tracking

Figure 4-2: Project Milestones.

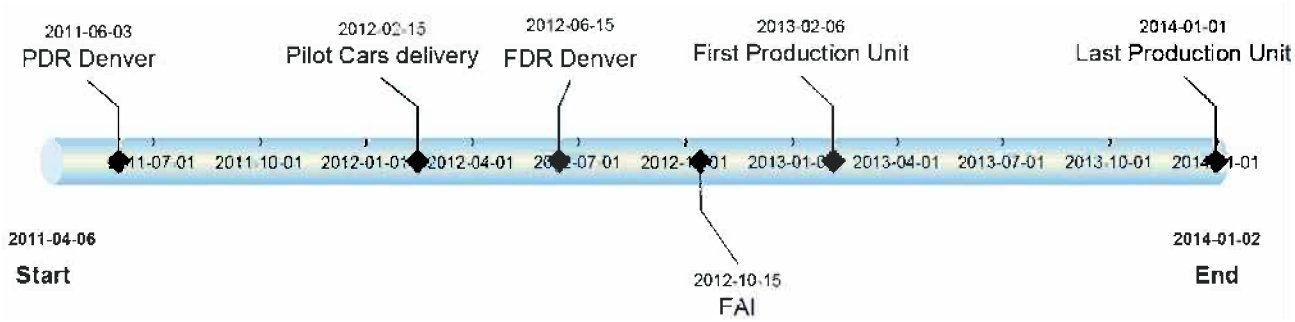

The Figure 4-2 shows the dates of the main project milestones that are basis of the V&V milestones.

The Table 4-1 defines the V&V milestones in relation to software-related group activities. The sequences of the activities to be performed as well as the completion criteria to reach these milestones are defined in the SDP module of CMM-01.

Table 4-1: V&V Milestones

SDP #	SDP Phase Description	V&V Milestone	SCI Part#	Date[1]	Project Milestone[2]
-	System Requirements Analysis	-	-	-	Not used in SPMP
SPP-200	Software Project Planning	SPP-200 In-Process Audit	All		Plan the Plan closing
SPG-300	Software Plan Generation	SPMP inspection performed (Table 5-1)	All	2011-06-10	End of SPG-300
		SQAP inspection performed (Table 5-1)		2011-06-03	PDR
		SCMP inspection performed (Table 5-1)		2011-06-03	
		SVVP inspection performed (Table 5-1)		2011-06-17	
SRD-400	Software Requirements Definition	DCU Application SRS inspection performed (Table 5-3, items #2 and #3)	2010L0226		FDR
		DCU Neuron Gateway Application SRS inspection performed (Table 5-3, items #2 and #3)	2010L0227		
		Door System SRTM generated & inspection performed (Table 5-1 item #4, Table 5-3, item #1)	All		
		Internal Software Specification Review (SSR) (Table 5-3, item #2)	N/A		
		Customer SSR (commenting SRS)	All		
		SPG-300 and SRD-400 In-Process Audit (Table 5-3, items #2 and #7)	All		
SD-500	Software Design	DCU Application SDD inspection performed (Table 5-4, items #2 and #3)	2010L0226		FDR
		DCU Neuron Gateway Application SDD inspection performed (Table 5-4, items #2 and #3)	2010L0227		
		System Test Plan generated & inspection performed (Table 5-1 item #4)	All		
		Component Test Plans generated & inspection performed (Table 5-4, item #5)	N/A		
		SRTM updated & inspection performed (Table 5-4, item #1)	All		
		Internal Preliminary Design Review (PDR) (Table 5-4, item #2)	N/A		
		Customer PDR (inspecting SDD documents)	All		
		Internal Final Design Review (FDR) (Table 5-4, item #2)	N/A		

[1] For more details related to dates see SPMP doc# 201111207 (Gantt Chart)
[2] According to SPRM #2 and Figure 4-2

SDP #	SDP Phase Description	V&V Milestone	SCI Part#	Date[1]	Project Milestone[2]
		Customer FDR (approving SDD documents)	All		
		SD-500 In-Process Audit (Table 5-4, item #2)	All		
SCT-600	Software Coding and Testing	DCU Application Code Walkthrough performed (Table 5-5, items #1, #2, and #3)	2010L0226		FAI
		DCU Neuron Gateway Application Code Walkthrough performed (Table 5-5, items #1, #2, and #3)	2010L0227		
		Component Tests developed & performed (Table 5-5, items #5, #6, and #7)	N/A		
		Component Test Reports generated & inspection performed (Table 5-1 item #4, Table 5-5, item #7)	N/A		
		DCU Application Integration Test Procedures (final version) generated & inspection performed (Table 5-1 item #4, Table 5-5, item #6)[1]	2010L0226		
		DCU Neuron Gateway Application Integration Test Procedures (final version) generated & inspection performed (Table 5-1 item #4, Table 5-5, item #6)[1]	2010L0227		
		SRTM updated & inspection performed (Table 5-1 item #4, Table 5-6, item #1)	All		
		Test Readiness Review (Table 5-5, item #6)	All		
		SCT-600 In-Process Audit (Table 5-5, item #2)	N/A		
SV-700	Software Validation	DCU Application Integration Tests performed and report generated (Table 5-6, item #3)	2010L0226		FAI
		DCU Neuron Gateway Application Integration Tests performed and report generated (Table 5-6, item #3)	2010L0227		FAI
		DCU Instrumented Tests performed and report generated (Table 5-6, item #3)	All DCU		FAI
		SPRs generated/updated (Table 5-6 item #3, Table 5-8 items #1)	As required	As required	As required
		Software product released	All		FAI
		DCU SVD generated & inspection performed (Table 5-7 item #2)	All DCU		FAI
		SVVR generated & inspection performed (Table 5-7, item #6)	All		FAI

[1] ITPS or Integration Test Procedure Specification, is a section of the Integration Test Plan, for further information check SQAP Section 4.9

SDP #	SDP Phase Description	V&V Milestone	SCI Part#	Date[1]	Project Milestone[2]
		Functional Configuration Audit (FCA)	All		FAI
		Physical Configuration Audit (PCA)	All		FAI
		SV-700 In-Process Audit	N/A		FAI
SDT-800	Software Development Tracking	SPRMs performed	All	Biweekly	FAI
		PRMs performed	All	Monthly	FAI
		Lessons Learned performed (Table 5-7, item #6)	All	End of the project	Post-FAI
		SVVR Final Report	All	End of the project	Post-FAI

4.3 Software Integrity Level Scheme

Both DCU Software Configuration Items having a SIL level greater than 0 have Moderate Risk for reliability. Table 4-2 shows the correspondence between the Hazard Risk Index (HRI) and the Software Integrity Level (SIL). The SIL assigned to the Software Configuration Items (SCI) having a SIL level greater than 0 is presented in the Table 4-3.

Table 4-2: SIL-HRI Correspondence Table

SIL	HRI	Risk Assessment
4	1	High Risk – Safety Related[1]
3	2	Medium Risk – Safety Related[2]
2	3-4	Moderate Risk[3]
1	5	Low Risk[4]

Table 4-3: SCI Software Integrity Level

HW Item	SCI	Category	HRI	SIL	Criticality Analysis Reference
DCU	DCU Neuron Gateway Application	A	3	2[5]	Unreleased
DCU	DCU Application	A	3	2[5]	Unreleased

Categories are defined as follow:

A - Application-specific software developed or adapted specifically for this Contract;

B - Application-independent software, that is, fixed system software that is used in multiple applications (e.g., operating systems), or software that is encapsulated in a replaceable component (e.g., intelligent power modules).

4.4 Resources Summary

The members of the project team will constitute the review team, namely the Software Team Leader (STL), the Software Engineer (SWE) and Software Designers, the Software Quality Assurance Agent (SQA), the Software Configuration Manager (SCM) and Software Department Supervisor (SDS). This team will produce specific reports that will be generated according to the type of review procedure that is being initiated.

4.5 Responsibilities

The responsibilities prescribed for the review V&V process are described in Table 4-4 and include the following:

- The author(s) of work product cannot perform the review upon their own work products.

[1] Software element must execute correctly or grave consequences will occur. No mitigation is possible.
[2] Software element must execute correctly or the intended use of the software will not be realized, causing serious consequences. Partial to complete mitigation is possible.
[3] Software element must execute correctly or an intended function will not be realized, causing minor consequences. Complete mitigation possible.
[4] Software element must execute correctly or intended function will not be realized, causing negligible consequences. Mitigation not required.
[5] Please note that this value may be revised in subsequent revisions of this document as the criticality analysis has not been completed.

- The review team will check the product under review for its completion of all criteria as defined by the standard it follows.
- Each member of the review team will be individually responsible for being adequately prepared for the role in the reviews that they have been assigned.

Table 4-4: V&V Responsibilities

Role	Qty	V&V Responsibilities
Software Department Supervisor (SDS)	1	• The SDS will be considered the V&V Manager for the project. • Responsible for overseeing all reviews. • Determine the roles and responsibilities by determining the author(s) and reviewers of the work product. • Member of the SCCB. • Approves project deliverables.
Software Team Leader	1	• Manages the software team on a day-to-day basis. • Member of the SCCB. • Tracks the project's schedule and resources usage. • Lead Software Projects Review Meetings (SPRM). • Review and update project's schedule according to V&V activity results. • Track to closure all V&V findings and improvement action requests.
Software Quality Assurance Agent	1	• Monitors, reviews, inspect and/or audit the software activities as per project's SVVP. • Member of SCCB. • Reviews plans and deliverables for compliance with applicable standards. • Provides guidance and assistance on process matters. • Performs IV&V activities
Software Engineers / Software Designers	1	• Create project technical documentation. • Perform software maintenance and reengineering activities on project software work products. • Responsible for the documentation and status of all software problems report and to maintain a Software Problem Reports system. • Member of SCCB.

4.5.1 Authority

The SDS and the SQA will have joint authority to formally accept an item subject to V&V. Such approval will not be given until all requirements of the V&V process have been compiled. This includes the use of checklist and reviews as well as SCM activities referred in the project's SQAP #201111208 and SCMP #201111186. Since the V & V activities involve all the parties, they need to be coordinated. It is the SDS's responsibility to coordinate all the efforts. The coordination will be done through different lines of communication: email, the Inspection Database, the Code Walkthrough Database, the SPR Database, working sessions and different types of meetings on a regular basis.

4.6 Tools, Techniques, and Methods

This section presents the tools, techniques and methodologies used for supporting activities described in this plan.

4.6.1 Tools

1. Audit Notification Form (S13-01): This Form contains the date and the location where the audit is to be conducted, the identification of the organizational unit to be audited, the agenda of the audit, the audit distribution and the expected date of issue, the expected time and duration for each major audit activity, the audit objectives and scope, the identification of the auditor, and the identification of the process or procedures to be audited.

2. Improvement Action Request Form and Quality Software Database (S13-02): The Quality Software Database is used to document and track the Improvement Action Request on a software activity, process, documentation or work product during the project. The IAR Form indicates the non-conformance, standard requirements that shall be followed, the immediate improvement required, the root cause of the non-conformance and the permanent improvement to be implemented to eliminate the recurrence of that type of non-conformance.
3. SPP-200 Audit Checklists (S13-04): This Audit Checklist is used during the audit of the Software Project Planning activities (see SEP document #CMM-01).
4. SPG-300 Audit Checklists (S13-05): This Audit Checklist is used during the audit of the Software Plan Generation activities (see SEP document #CMM-01).
5. SRD-400 Audit Checklists (S13-06): This Audit Checklist is used during the audit of the Software Requirements Definition activities (see SEP document #CMM-01).
6. SD-500 Audit Checklists (S13-07): This Audit Checklist is used during the audit of the Software Development activities (see SEP document #CMM-01).
7. SCT-600 Audit Checklists (S13-08): This Audit Checklist is used during the audit of the Software Coding and Testing activities (see SEP document #CMM-01).
8. SV-700 Audit Checklists (S13-09): This Audit Checklist is used during the audit of the Software Validation activities (see SEP document #CMM-01).
9. SDT-800 Audit Checklists (S13-10): This Audit Checklist is used during the audit of the Software Development Tracking activities (see SEP document #CMM-01).
10. Software Problem Report (SPR) and SPR Clear Quest Database (S01-01): The Clear Quest SPR Database are used to control, track and monitor issues found after a software work product has been baselined or released.
11. Inspection Form and Inspection Database (S05-01): The Inspection Form and the Inspection Database are used to document and track to closure issues found on the software documentation. The resulting inspection form provides evidence of V&V activities execution.
12. SPMP Document Inspection Checklists (S05-02): This Inspection Checklist is used during the SPMP document review.
13. SQAP Document Inspection Checklists (S05-03): This Inspection Checklist is used during the SQAP document review.
14. SCMP Document Inspection Checklists (S05-04): This Inspection Checklist is used during the SCMP document review.
15. SVVP Document Inspection Checklists (S05-05): This Inspection Checklist is used during the SVVP document review.
16. SVVR Document Inspection Checklists (S05-06): This Inspection Checklist is used during the SVVR document review.
17. SRS Document Inspection Checklists (S05-08): This Inspection Checklist is used during the SRS document review.
18. SDD Document Inspection Checklists (S05-09): This Inspection Checklist is used during the SDD document review.
19. SUD Document Inspection Checklists (S05-10): This Inspection Checklist is used during the SUD document review.
20. Software Test Plan Document Inspection Checklists (S05-11): This Inspection Checklist is used during the Software Test Plan document review (Section Related to the Planning)
21. Software Test Procedure Specification Document Inspection Checklists (S05-13): This Inspection Checklist is used during the review of Software Test Procedure Specification (Section included in the Software Test Plan).
22. SRTM Document Inspection Checklists (S05-14): This Inspection Checklist is used during the SRTM document review.
23. SVD Document Inspection Checklists (S05-15): This Inspection Checklist is used during the SVD document review.

24. Code Walkthrough Form and Code Walkthrough Database (S06-01): The Code Walkthrough Form and Code Walkthrough Database are used to document and track to closure issues found on the software code. The resulting inspection form provides evidence of V&V activities execution.
25. Risk Form (S16-01): The Risk Form is used to document the risks identified during the project.
26. Template (S17-01): This document is the SRS Template, which define the format and the contents of the SRS.
27. Template (S17-02): This document is the SPMP Template, which define the format and the contents of the SPMP.
28. Template (S17-03): This document is the SQAP Template, which define the format and the contents of the SQAP.
29. Template (S17-04): This document is the SCMP Template, which define the format and the contents of the SCMP.
30. Template (S17-06): This document is the SRTM Template, which define the format and the contents of the SRTM.
31. Template (S17-07): This document is the SDD Template, which define the format and the contents of the SDD.
32. Template (S17-08): This document is the Software Test Plan Template, which define the format and the contents of the Software Test Plan (Section related to the planning).
33. Template (S17-10): This document is the Software Test Procedure Template, which define the format and the contents of the Software Test Procedure(Section included to the Test Plan).
34. Template (S17-11): This document is the SVD Template, which define the format and the contents of the SVD.
35. Template (S17-12): This document is the SUD Template, which define the format and the contents of the SUD.
36. Template (S17-13): This document is the SVVP Template, which define the format and the contents of the SVVP.
37. Template (S17-14): This document is the SVVR Template, which define the format and the contents of the SVVR.

4.6.2 Techniques

1. Software Engineering Process (CMM-01): The Software Engineering Process (SEP) is a framework for the development of software projects at VSRS. The SEP follows rules, requirements and activities required in the Capability Maturity Model (CMM) for Software, level 2, from the Software Engineering Institute (SEI).
    a. The SEP establishes a common process framework that defines, implements, and supports the VSRS organization by specifying the methods, people and tools necessary to achieve projects and software products with the lowest cost, best delivery time and the lowest rates of defect.
    b. The SEP delineates the framework that shall be applied in any research, design, development, maintenance or acquisition of software products by VSRS. The SEP provides a tool for VSRS management to ensure that the people, products and processes involved, are supported by an organization and a set of methods and tools capable of meeting the standards of performance required by company objectives.
    c. VSRS personnel must apply a predictable engineering process to design, develop, subcontract or maintain software products.
2. Software Engineering Policy Manual (CMMI-02): This policy manual establishes management expectations for developing and sustaining a CMMI Level 2 compliant software engineering process capability within VSRS.
3. Software Coding Standard (SWI-02): This document describes the coding standard for software programs. The purpose of this coding standard is to improve maintainability, reusability, and source-code quality.

4. Inspection Guide (SWI-05): This document describes the methods, resources, and the process to be used by VSRS to perform an Inspection to remove defects on a software document early and efficiently during a software project. This guide defines outlines to all users and ensures that a set of auditable activities can be repeated by different individuals with appropriate diligence.
5. Code Walkthrough Guide (SWI-06): This document describes the methods, resources, and the process to be used by VSRS to perform a code walk-through exercise to remove defects, improve the software, consider alternative implementation, and evaluate conformance to standards and specifications early and efficiently in a software product. This guide defines outlines to all users and ensures that a set of auditable activities can be repeated by different individuals with appropriate diligence.
6. Lessons Learned Guide (SWI-07): This document describes the methods, resources, and the process to be used by VSRS to perform the Lessons Learned activities at the end of a software project. This guide defines outlines to all users and ensures that a set of auditable activities can be repeated by different individuals with appropriate diligence.
7. SPRM Guide (SWI-08): This document describes the methods, resources, and processes to be used by VSRS to perform a Software Project Review Meeting (SPRM) on a software project. This guide defines outlines to all users and ensures that a set of auditable activities can be repeated by different individuals with appropriate diligence.
8. SQA Guide (SWI-13): This document describes the methods, resources, and processes to be used by VSRS to conduct and perform Software Quality Audit, Software Review and Configuration Audit to evaluate the status, the adequacy, and the effectiveness of the Quality Software activities conducted by VSRS. This guide defines outlines to all users and ensures that a set of auditable activities can be repeated by different individuals with appropriate diligence.
9. Risk Guide (SWI-16): This document describes the methods, resources, and the process to be used by VSRS to evaluate and identify the risks as early as possible and includes concepts on how to adjust the development strategy to mitigate those risks that can affect a software project. This guide defines outlines to all users and ensures that a set of auditable activities can be repeated by different individuals with appropriate diligence.
10. Document Control, File Naming Methodology (EWI-006): This document describes a mandatory file naming methodology to uniquely identify a specific file and the revision level of the respective file. This work instruction also explains how documents and drawings must be identified or be referenced to other documents.
11. IEEE Standards listed in Section 2.

4.6.3 Methodologies

CMU/SEI-TR-2006-008	CMMI for Development Version 1.2, Software Engineering Institute, Carnegie Mellon University, 2006-08, www.sei.cmu.edu
EN 50128	Railway applications- Communications and processing systems – Software for railway control and protection systems, 2001.

5 V&V PROCESSES

5.1 Management

5.1.1 Management of V&V Activities

The Management of V&V Activities is performed in all software life cycle processes and activities.

5.1.1.1 Tasks

As per SEP, see Table 5-1.

5.1.1.2 Methods and Criteria

As per SEP, see Table 5-1.

5.1.1.3 Inputs and Outputs

As per SEP, see Table 5-1.

Table 5-1: Management of V&V Activities

Activity: Management of the V&V Effort (Process: Management)				
ID	**V & V tasks**	**Methods and Criteria**	**Input**	**Output**
1	Software Verification and Validation Plan Generation	a) Generate an SVVP for all life cycle processes. Establish a baseline SVVP prior to the Requirements V&V activities. b) Identify project milestones in the SVVP. c) Schedule V&V tasks to support project management reviews and technical reviews. d) Perform SVVP inspection as per Inspection Guide document #SWI-05.	VSRS's SVVP Template . Procurement Technical Specification of Entrance door System for Denver Eagle P3 Project Inspection Form.	Preliminary SVVP and its Inspection Form.
2	Proposed/Baseline Change Assessment	a) Evaluate proposed software changes for effects on previously completed V&V tasks (ID: 1). b) Plan iteration of affected tasks or initiate new tasks to address software baseline changes or iterative development processes. c) Verify and validate that the change is consistent with system requirements and does not adversely affect requirements directly or indirectly. An adverse effect is a change that could create new system hazards and risks or impact previously resolved hazards and risks. d) If required, perform SVVP inspection as per Inspection Guide document #SWI-05.	Previous SVVP SPR (with the proposed changes). Inspection Form. SCCB meeting minutes.	Updated SVVP and its Inspection Form. Updated SPR.
3	Management Review of the V&V effort	a) Review and summarize the V&V effort to define changes to V&V tasks or to redirect the V&V effort. b) Evaluate each anomaly for its impact on the software system and assess whether it is a critical anomaly. c) Recommend whether to proceed to the next set of V&V and development life cycle activities, and provide task reports[1], anomaly reports[2], and V&V Activity Summary Report to the organizations identified in this SVVP. d) Verify that all V&V tasks comply with task requirements defined in the SVVP. e) Verify that V&V task results have a basis of evidence supporting the results. f) Assess all V&V results and provide recommendations for program acceptance and certification as input to the V&V Final Report (SVVR). g) Use results of review to identify process improvement opportunities in the conduct of V&V. h) Review the quality of the products and services to ensure they meet the customer requirements	Previous SVVP SVVR. Inspection Form.	Updated SVVP and its Inspection Form.

[1] SQAP refers instead to test reports.
[2] SQAP refers to anomaly report as Software Problem Report (SPR).

Activity: Management of the V&V Effort (Process: Management)				
ID	**V & V tasks**	**Methods and Criteria**	**Input**	**Output**
		i) Review the program risks and initiate actions to mitigate above threshold risks. j) Review program measures to ensure the quality of product and processes. k) If required, perform inspection as per Inspection Guide document #SWI-05.		
4	Management and Technical Review Support	Not Applicable	Not Applicable	Not applicable for SIL2.
5	Interface with Organizational and Supporting Processes	Not Applicable	Not Applicable	Not applicable for SIL2.
6	Identify process improvement opportunities in the conduct of V&V.	a) Gather and analyze the lessons learned. b) Gather and analyze the risks identified. c) Gather and analyze the V&V measures. d) Identify and analyze deficiencies in the V&V process. e) Determine and implement corrective actions (e.g., repeat V&V tasks or conduct a new V&V task to address the corrective action or use a different method/technique for executing a V&V task). f) Monitor the efficacy of the corrective actions. (how you do monitoring) g) Document findings in final report. (Where do you put that)	SVVP Results of analysis (Where do you put these analysis) Prior end of activity reports Task reports	Updated SVVP Input to the end of activity report Input to the final report New/updated V&V policies/procedures/ reports Updated V&V infrastructure

5.2 Acquisition

5.2.1 Acquisition Support V&V Activities

This section is not applicable.

5.3 Supply

5.3.1 Planning Supply V&V Activities

This section is not applicable.

5.4 Development

5.4.1 Concept V&V Activities

The Concept V&V activity addresses system architectural design and system requirements analysis. The objectives of V&V are to verify the allocation of system requirements, validate the selected solution, and ensure that no false assumptions have been incorporated in the solution.

5.4.1.1 Tasks

As per SEP, see Table 5-2.

5.4.1.2 Methods and Criteria

As per SEP, see Table 5-2.

5.4.1.3 Inputs and Outputs

As per SEP, see Table 5-2.

Table 5-2: Concept V&V Activities

Activity: Concept V&V (Process: Development)				
ID	**V & V tasks**	**Methods and Criteria**	**Input**	**Output**
1	Concept Documentation Evaluation	a) Verify that the concept documentation satisfies user needs and is consistent with acquisition needs. b) Validate constraints of interfacing systems and constraints or limitations of proposed approach. c) Analyze system requirements and validate that the following satisfy user needs: 1. System functions; 2. End-to-end system performance; 3. Feasibility and testability of the functional requirements; 4. System architecture design; 5. Operation and maintenance requirements; 6. Migration requirements from an existing system where applicable. d) Perform inspection as per Inspection Guide document #SWI-05.	Contractual documentation. SFD Inspection Form.	SFD's Inspection Form. Pre-PDR Builder's comments (letters, MoM, action items).
2	Criticality Analysis	a) Determine whether software integrity levels are established for requirements, detailed functions, software modules, subsystem, or other software partitions. b) Verify that the assigned software integrity levels are correct. If software integrity levels are not assigned, then assign software integrity levels to the system requirements. c) Document the software integrity level assigned to individual software components (e.g., requirements, detailed functions, software modules, subsystems, or other software partitions). For V&V planning purposes, the software system shall be assigned the same integrity level as the highest level assigned to any individual element. d) Verify whether any software component can influence individual software components assigned a higher software integrity level, and if such conditions exist, then assign that software component the same higher software integrity level.	SFD. FMECA. SVVP.	Updated FMECA. SVVP with updated software integrity level assignments (Section 4.3), if necessary.
3	Hardware/ Software/ User Requirements Allocation Analysis	Not applicable	Not applicable	Not applicable for SIL2
4	Traceability Analysis	a) Identify all system requirements that will be implemented completely or partially by software. b) Verify that these system requirements are traceable to the Technical Specification. c) Start the software requirements traceability analysis with system requirements (SRTM).	Contractual documentation. SFD Inspection Form and SRTM Document Inspection Checklist.	SFD's Inspection Form. SRTM and its Inspection Form.

Activity: Concept V&V (Process: Development)				
ID	**V & V tasks**	**Methods and Criteria**	**Input**	**Output**
		Perform inspection as per Inspection Guide document #SWI-05.		
5	Hazard Analysis	Not applicable	Not applicable	Not applicable for SIL2
6	Security Analysis	Not applicable	Not applicable	Not applicable for SIL2
7	Risk Analysis	Not applicable	Not applicable	Not applicable for SIL2

5.4.2 Requirements V&V Activities

The Requirements V&V activity addresses software requirements analysis. The objectives of V&V are to ensure the correctness, completeness, accuracy, testability, and consistency of the requirements.

5.4.2.1 Tasks

As per SEP, see Table 5-3.

5.4.2.2 Methods and Criteria

As per SEP, see Table 5-3.

5.4.2.3 Inputs and Outputs

As per SEP, see Table 5-3.

Table 5-3: Requirements V&V Activities

Activity: Requirements V&V (Process: Development)				
ID	**V & V tasks**	**Methods and Criteria**	**Input**	**Output**
1	Traceability Analysis	Trace the software requirements (SRS) to system requirements (System Functional Description SFD), and system requirements to the software requirements. Analyze identified relationships for correctness, consistency, completeness, and accuracy. The task criteria are as follow: a) Correctness: Validate that the relationships between each software requirement and its system requirement are correct. b) Consistency: Verify that the relationships between the software and system requirements are specified to a consistent level of detail. c) Completeness: 1) Verify that every software requirement is traceable to a system requirement with sufficient detail to comply with it; 2) Verify that all system requirements related to software are traceable to software requirements. d) Accuracy: Validate that the system performance and operating characteristics are accurately specified by the traced software requirements. Perform inspection as per Inspection Guide document #SWI-05.	SFD. Preliminary SRTM (with the SDD and Test Design/Procedure sections still empty). SRS. Inspection Form and SRTM Document Inspection Checklist.	SRTM and its Inspection Form (document # S05-01)
2	Software Requirements Evaluation	Evaluate the requirements (e.g., functional, non functional, capability, interface, qualification, safety, security, human factors, data definitions, user documentation, installation and acceptance, user operation, and user maintenance) of the SRS and IRS for correctness, consistency, completeness, accuracy, readability, and testability. The task criteria are: a) Correctness 1) Verify and validate that the software requirements satisfy the system requirements allocated to software within the assumptions and constraints of the system[1]; 2) Verify that the software requirements comply with standards, references, regulations, policies, physical laws, and business rules[2]; 3) Validate the sequences of states and state changes using logic and data flows coupled with domain expertise, prototyping results,	SFD. SRTM. SRS. Inspection Form and SRS Document Inspection Checklist. SRD-400 Audit Checklist.	SRS's Inspection Form. SRD-400 Audit Report.

[1] A system feature that conflicts with a corresponding system requirement is not correct.

[2] Each feature description should document something the customers really need or something that is required for a particular conformance.

Activity: Requirements V&V (Process: Development)				
ID	**V & V tasks**	**Methods and Criteria**	**Input**	**Output**
		engineering principles, or other basis; 4) Validate that the flow of data and control satisfy the functionality and performance requirements; 5) Validate data usage and format. b) Consistency: 1) Verify that all terms and concepts are documented consistently; 2) Verify that the function interactions and assumptions are consistent and satisfy system requirements and acquisition (system engineering) needs[1]; 3) Verify that there is internal consistency between the software requirements and external consistency with the system requirements[2]. c) Completeness: 1) Verify that the following elements are in the SRS, within the assumptions and constraints of the system: Functionality; Process definition and scheduling; Hardware, software, and user interface descriptions; Performance criteria; Critical configuration data; System, device, and software control[3]; 2) Verify that the SRS satisfies specified configuration management procedures. d) Accuracy: 1) Validate that the logic, computational, and interface precision satisfy the requirements in the system environment; 2) Validate that the modeled physical phenomena conform to system accuracy requirements and physical laws[4]. e) Readability: 1) Verify that the documentation is legible, understandable, and unambiguous to the intended audience[5]; 2) Verify that the documentation defines all acronyms, mnemonics, abbreviations, terms, and symbols. f) Testability: 1) Verify that there are objective acceptance criteria for validating the		

[1] Each feature should be linked to its source. Which could be a higher level system requirement.
[2] Consistent feature descriptions do not conflict with other feature descriptions or with higher level requirements. Disagreements among feature descriptions must be resolved before development can proceed.
[3] No feature or necessary information should be missing.
[4] It must be possible to implement each feature within the known capabilities an limitations of the system and its environment.
[5] The reader of a feature description should be able to draw only one interpretation of it. Multiple readers of a feature description should arrive at the same interpretation.

Activity: Requirements V&V (Process: Development)				
ID	**V & V tasks**	**Methods and Criteria**	**Input**	**Output**
		requirements of the SRS[1]. Perform inspection as per Inspection Guide document #SWI-05.		
3	Interface Analysis	Verify and validate that the requirements for software interfaces with hardware, user, operator, and other systems are correct, consistent, complete, accurate, and testable. The task criteria are as follow: a) Correctness: Validate the external and internal system and software interface requirements. b) Consistency: Verify that the interface descriptions are consistent between SRSs. c) Completeness: Verify that each interface is described and includes data format and performance criteria. d) Accuracy: Verify that each interface provides information with the required accuracy. e) Testability: Verify that there are objective acceptance criteria for validating the interface requirements. Perform inspection as per Inspection Guide document #SWI-05.	SFD Inspection Form and SRS Document Inspection Checklist.	SRS's Inspection Form.
4	Criticality Analysis	a) Review and update the existing FMECA from the prior FMECA using the SRS. b) Implementation methods and interfacing technologies may cause previously assigned integrity levels to be raised or lowered for given software. Verify that no inconsistent or undesired software integrity consequences are introduced by reviewing the revised software integrity levels. Perform simultaneous inspection on FMECA and SRS as per Inspection Guide.	Previous FMECA. SRS.	Updated FMECA. Updated SVVP if needed.

[1] Features that are not consistent, feasible, or ambiguous, also are non testable.

Activity: Requirements V&V (Process: Development)				
ID	**V & V tasks**	**Methods and Criteria**	**Input**	**Output**
5	System Test Plan Generation and Verification	1) Verify that the developer's system test plan satisfies the following criteria: i. Conformance to project-defined test document purpose, format, and content (e.g., see IEEE Std. 829-1998). ii. Test coverage of system requirements 2) Validate that the developer's system test plan satisfies the following criteria: i. Appropriateness of test methods and standards used ii. Conformance to expected results iii. Feasibility of system qualification testing iv. Capability to be operated and maintained	Concept documentation SRS IRS User documentation Previous System test plan Inspection Form / Inspection Checklist **Note:** In VSRS, System and Acceptance plans are merged into the Integration Test Plan(ITP).	System Test Plan
6	Acceptance Test Plan Generation and Verification	Final acceptance tests are under the responsibility of the car builder and must be performed on a complete train.	-	-
7	Configuration Management Assessment	Verify that the Configuration Management process is complete and adequate. The task criteria are as follows: a) Completeness: Verify that there is a process for describing the software product functionality, tracking program versions, and managing changes. b) Adequacy: Verify that the configuration management process is adequate for the development complexity, software and system size, software integrity level, project plans, and user needs.	As per Vapor's SEP SRD-400.	SEP's module SPG-300/SRD-400 Audit Report.
8	Hazard Analysis	Not applicable	Not applicable	Not applicable for SIL2
9	Security Analysis	Not applicable	Not applicable	Not applicable for SIL2
10	Risk Analysis	Not applicable	Not applicable	Not applicable for SIL2

5.4.3 Design V&V Activities

The Design V&V activity addresses software architectural design and software detailed design. The objectives of V&V are to demonstrate that the design is a correct, accurate, and complete transformation of the software requirements and that no unintended features are introduced.

5.4.3.1 Tasks

As per SEP, see Table 5-4.

5.4.3.2 Methods and Criteria

As per SEP, see Table 5-4.

5.4.3.3 Inputs and Outputs

As per SEP, see Table 5-4.

Table 5-4: Design V&V Activities

Activity: Design V&V (Process: Development)				
ID	**V & V tasks**	**Methods and Criteria**	**Input**	**Output**
1	Traceability Analysis	Trace design elements (SDD) to requirements (SRS), and requirements to design elements. Document the relationships into the SRTM. Analyze relationships for: a) Correctness: Validate the relationship between each design element and the software requirement b) Consistency: Verify that the relationship between the design elements and the software requirements are specified to a constant level of detail. c) Completeness: 1) Verify that all design elements are traceable from the software requirements; 2) Verify that all software requirements are traceable to the design elements. Perform inspection as per Inspection Guide document #SWI-05.	Previous SRTM SDD Inspection form and SRTM document inspection checklist	Updated SRTM and its inspection form.
2	Software Design Evaluation	Evaluate the design elements (SDD) for correctness, accuracy, readability, and testability. Criteria are as follow: a) Correctness: 1) Verify and validate that the designed components satisfies the design elements; 2) Verify that the design elements comply with standards, references, regulations, policies, physical laws, and business rules; 3) Validate the sequences of states and state changes using logic and data flows coupled with domain expertise, prototyping results, engineering principles, or other basis; 4) Validate that the flow of data and control satisfy functionality and performance requirements; 5) Validate data usage and format; 6) Assess the appropriateness of design methods and standards. b) Consistency: 1) Verify that all terms and code concepts are documented consistently; 2) Verify that there is internal consistency between the design elements. c) Completeness:	SRS SDD SRTM Inspection form and SDD document inspection checklist. SD-500 audit checklist.	SDD inspection form SDD inspection checklist SD-500 audit report

Activity: Design V&V (Process: Development)				
ID	**V & V tasks**	**Methods and Criteria**	**Input**	**Output**
		1) Verify that the following elements are in the SDD, within the assumptions and constraints of the system: i. Functionality; ii. Process definition and scheduling; iii. Hardware, software, and user interface descriptions; iv. Performance criteria; v. Critical configuration data; vi. System, device, and software control; 2) Verify that the SDD satisfy specified configuration management procedures. d) Accuracy: 1) Validate that the logic, computational, and interface precision satisfy the requirements in the system environment; 2) Validate that the modeled physical phenomena conform to system accuracy requirements and physical laws. e) Readability: 1) Verify that the documentation is legible, understandable, and unambiguous to the intended audience; 2) Verify that the documentation defines all acronyms, mnemonics, abbreviations, terms, symbols, and design language, if any. f) Testability 1) Verify that there are objective acceptance criteria for validating each software design element and the system design. 2) Verify that each software design element is testable to objective acceptance criteria. Perform inspection as per Inspection Guide document #SWI-05.		
3	Interface Analysis	Verify and validate that the software design interfaces with hardware, user, operator, software, and other systems for correctness, consistency, completeness, accuracy, and testability. Criteria are as follow: a) Correctness Validate the external and internal software interface design in the context of system requirements. b) Consistency Verify that the interfaces design is consistent between the SDD and IDD/ICD. c) Completeness	SFD SRS SDD SDD Inspection form and SDD document inspection checklist	SDD inspection form SDD inspection checklist

Activity: Design V&V (Process: Development)				
ID	**V & V tasks**	**Methods and Criteria**	**Input**	**Output**
		Verify that each interface is described and includes data format and performance criteria (e.g. timing, bandwidth, accuracy, safety, and security) d) Accuracy Verify that each interface provides information with the required accuracy. e) Testability Verify that there are objective acceptance criteria for validating the interface design. Inspect SDD (and related IDD/ICD, if any) as per Inspection Guide.		
4	Criticality Analysis	a) Review and update the existing criticality analysis results from the prior analysis using the SDD and IDD. b) Implementation methods and interfacing technologies may cause previously assigned software integrity levels to be raised or lowered for a given software element. Verify that no inconsistent or undesired software integrity consequences are introduced by reviewing the revised software integrity levels. Perform a joint FMECA vs. SDD review as per Inspection Guide.	FMECA. SDD.	Updated FMECA, if needed. Updated SVVP, if needed.
5	Component Test Plan Generation	1) Verify that the developer's component test conforms to project-defined test document purpose, format, and content (e.g., see IEEE Std. 829-1998). 2) Validate that the developer's component test plan satisfies the following criteria: i. Traceable to the software requirements and design ii. External consistency with the software requirements and design iii. Internal consistency between unit requirements iv. Test coverage of units v. Feasibility of software integration and testing vi. Feasibility of operation and maintenance (e.g., capability to be operated and maintained in accordance with user needs)	SDD CTP[1] Inspection Forms Software Test Plan Document Checklist	CTP and its inspection form CTP checklist
6	Integration Test Plan Generation	1) Verify that the developer's integration test plan conforms to project-defined test document purpose, format, and content (e.g., see IEEE Std. 829-1998).	SRS SDD ITP inspection form Software test plan document	ITP and its inspection form

[1] Component Test Plan (CTP), is a section of the Software Component Test Plan (SCTP), further information check SQAP Section.4.9

Activity: Design V&V (Process: Development)				
ID	**V & V tasks**	**Methods and Criteria**	**Input**	**Output**
		2) Validate that the developer's integration test plan satisfies the following criteria: i. Traceable to the system requirements ii. External consistency with the system requirements iii. Internal consistency iv. Test coverage of the software requirements v. Appropriateness of test standards and methods vi. Conformance to expected results vii. Feasibility of software qualification testing viii. Feasibility of operation and maintenance (e.g., capability to be operated and maintained in accordance with user needs)	checklist	
7	Component Test Design Generation	Test Design is included in Component Test Plan.	-	-
8	Integration Test Design Generation	Test Design is included in Integration Test Plan.	-	-
9	System Test Design Generation	Test Design is included in System Test Plan.	-	-
10	Acceptance Test Design Generation	Included in Acceptance Test Plan. Final acceptance tests are under the responsibility of the car builder and must be performed on a complete train.	-	-
11	Hazard Analysis	Not applicable	Not applicable	Not applicable for SIL2
12	Security Analysis	Not applicable	Not applicable	Not applicable for SIL2
13	Risk Analysis	Not applicable	Not applicable	Not applicable for SIL2

5.4.4 Implementation V&V Activities

The Implementation V&V activity addresses software coding and testing. The objectives of V&V are to verify and validate that these transformations are correct, accurate, and complete.

5.4.4.1 Tasks

As per SEP, see Table 5-5.

5.4.4.2 Methods and Criteria

As per SEP, see Table 5-5.

5.4.4.3 Inputs and Outputs

As per SEP, see Table 5-5.

Table 5-5: Implementation V&V Activities

Activity: Implementation V&V (Process: Development)				
ID	**V & V tasks**	**Methods and Criteria**	**Input**	**Output**
1	Traceability Analysis	Trace source code components to corresponding design specification(s), and design specification(s) to source code components Analyze identified relationships for correctness, consistency, and completeness. The task criteria are as follows: a) Correctness Validate the relationship between the source code components and design element(s). b) Consistency Verify that the relationships between the source code components and design elements are specified to a consistent level of detail. c) Completeness 1) Verify that all source code components are traceable from the design elements. 2) Verify that all design elements are traceable to the source code components. See Code Walkthrough Guide (document # SWI-06).	SDD Source Code. Code Walkthrough Form. (document # S06-01)	Source Code Walkthrough Form (document # S06-01). SRTM and its Inspection Form.
2	Source Code and Source Code Documentation Evaluation	Evaluate the source code components (Source Code Documentation) for correctness, consistency, completeness, accuracy, readability, and testability. The task criteria are as follows: a) Correctness: 1) Verify and validate that the source code component satisfies the software design; 2) Verify that the source code components comply with standards, references, regulations, policies, physical laws, and business rules; 3) Validate the source code component sequences of states and state changes using logic and data flows coupled with domain expertise, prototyping results, engineering principles, or other basis; 4) Validate that the flow of data and control satisfy functionality and performance requirements; 5) Validate data usage and format; 6) Assess the appropriateness of coding methods and standards. b) Consistency 1) Verify that all terms and code concepts are documented consistently;	SDD Source Code. Code Walkthrough Form. Coding standards SCT-600 Audit Checklist.	Source Code Walkthrough Form. Software Component Test Report (SCTR) SCT-600 Audit Report.

Activity: Implementation V&V (Process: Development)				
ID	**V & V tasks**	**Methods and Criteria**	**Input**	**Output**
		2) Verify that there is internal consistency between the source code components; 3) Validate external consistency with the software design and requirements. c) Completeness 1) Verify that the following elements are in the source code, within the assumptions and constraints of the system: i. Functionality; ii. Process definition and scheduling; iii. Hardware, software and user interface descriptions; iv. Performance criteria; v. Critical configuration data; vi. System, device, and software control; 2) Verify that the source code documentation satisfies specified configuration management procedures. d) Accuracy: 1) Validate the logic, computational, and interface precision in the system environment; 2) Validate that the modeled physical phenomena conform to system accuracy requirements and physical laws. e) Readability: 1) Verify that the documentation is legible, understandable, and unambiguous to the intended audience; 2) Verify that the documentation defines all acronyms, mnemonics, abbreviations, terms, and symbols. f) Testability: 1) Verify that there are objective acceptance criteria for validating each source code component; 2) Verify that each source code component is testable against objective acceptance criteria. Perform Source Code Walkthrough as per Code Walkthrough Guide document #SWI-06.		
3	Interface Analysis	As per Code Walkthrough Guide (document # SWI-06).. Verify and validate that the software source code interfaces with hardware, user, operator, software, and other systems for correctness, consistency, completeness, accuracy, and testability. Criteria are:	SDD Source Code. Code Walkthrough Form.	Source Code Walkthrough Form(s) Inspection form.

Activity: Implementation V&V (Process: Development)				
ID	**V & V tasks**	**Methods and Criteria**	**Input**	**Output**
		a) Correctness Validate the external and internal software interface code in the context of system requirements. b) Consistency Verify that the interface code is consistent between source code components and to external interfaces (i.e. hardware, user, operator, and other software). c) Completeness Verify that each interface is described and includes data format and performance criteria (e.g. timing, bandwidth, accuracy, safety, and security). d) Accuracy Verify that each interface provides information with the required accuracy. e) Testability Verify that there are objective acceptance criteria for validating the interface code.		
4	Criticality Analysis	a) Review and update the existing criticality analysis (FMECA) from the prior analysis report using the source code. b) Implementation methods and interfacing technologies may cause previously assigned software integrity levels to be raised or lowered for given software. Verify that no inconsistent or undesired software integrity consequences are introduced by reviewing the revised software integrity levels (from the FMECA). Perform review as per Code Walkthrough Guide (SWI-06)..	Previous FMECA. Source Code.	Updated FMECA, if required. Updated SVVP, if required. Application Source Code's Walkthrough Form
5	Component Test Case Generation	Included in Component Test Procedure Specifications (Section in Software Component Test Plan)	-	-
6	Integration Test Case Generation	Included in Integration Test Procedure Specifications (Section in Software Integration Test Plan)	-	-
7	System Test case generation	Included in System Test Procedure Specifications (Section in System Test Plan)	-	-
8	Acceptance Test case generation	Final acceptance tests are under the responsibility of the car builder and must be performed on a complete train.	-	-
9	Component Test Procedure Generation	Component Test Cases are included in Component Test Procedures. (Section in Software Component Test Plan)	-	-
10	Integration Test Procedure Generation	b) Software integrity levels 1 and 2 1) Verify that the developer's integration test procedures conform to	SRS	ITPS and its inspection form.

Activity: Implementation V&V (Process: Development)				
ID	**V & V tasks**	**Methods and Criteria**	**Input**	**Output**
		project-defined test document purpose, format, and content (e.g., see IEEE Std. 829-1998). 2) Validate that the developer's integration test cases satisfy the criteria in V&V activity from Table 5-4, Task 6.	SDD ITP[1] ITPS[1] Inspection form and Software Test Procedure Specification document checklist.	
11	System Test Plan generation[2]	Included in System Test Plan.	-	-
12	Component Test execution	b) Software integrity level 2 a. Use the developer's component test results to validate that the software satisfies the test acceptance criteria.	-	-
13	Hazard Analysis	Not applicable	Not applicable	Not applicable for SIL2
14	Security Analysis	Not applicable	Not applicable	Not applicable for SIL2
15	Risk Analysis	Not applicable	Not applicable	Not applicable for SIL2

[1] ITPS included in ITP
[2] The System Test Plan (SyTP) will be executed at the System Level and includes 3 major sections: System Test Planning, System Test Design Specification, System Test Procedures Specification. For further information check SQAP chapter. 4.9.3

5.4.5 Test V&V Activities

The objectives of the Test V&V activities are to ensure that the software requirements and system requirements allocated to software are satisfied by execution of integration, system, and acceptance tests.

5.4.5.1 Tasks

As per SEP, see Table 5-6.

5.4.5.2 Methods and Criteria

As per SEP, see Table 5-6.

5.4.5.3 Inputs and Outputs

As per SEP, see Table 5-6.

Table 5-6: Test V&V Activities

Activity: Test V&V (Process: Development)				
ID	**V & V tasks**	**Methods and Criteria**	**Input**	**Output**
1	Traceability Analysis	Analyze relationships in the Integration V&V Test Designs and Procedures for correctness and completeness. Criteria are: a) Correctness: Verify that there is a valid relationship between the Integration V&V Test Designs and Procedures and SRS; b) Completeness: Verify that all Integration V&V Test Design and Procedures are traceable to the SRS. Perform inspection as per Inspection Guide document #SWI-05.	Previous SRTM. ITPS[1]. Inspection Form and SRTM Document Inspection Checklist.	Updated SRTM and its Inspection Form.
2	Acceptance Test Procedure Generation	Final acceptance tests are under the responsibility of the car builder and must be performed on a complete train.	-	-
3	Integration Test Execution	Use the developer's integration test results to verify that the software satisfies the test acceptance criteria.	Source code Executable Code ITP[1] ITPS[1] Integration test results	Updated Integration Test Reports (ITR)
4	System Test Execution	Included in System Test Report (SyTR)	-	-
5	Acceptance V&V Test Execution	Final acceptance tests are under the responsibility of the car builder and must be performed on a complete train.	-	-
6	Hazard Analysis	Not applicable	Not applicable	Not applicable for SIL2
7	Hazard Analysis	Not applicable	Not applicable	Not applicable for SIL2
8	Risk Analysis	Not applicable	Not applicable	Not applicable for SIL2

[1] ITPS included in ITP

5.4.6 Installation and Checkout V&V Activities

The Installation and Checkout V&V activity addresses software installation and software acceptance support. The objectives of V&V are to verify and validate the correctness of the software installation in the target environment.

5.4.6.1 Tasks

As per SEP, see Table 5-7.

5.4.6.2 Methods and Criteria

As per SEP, see Table 5-7.

5.4.6.3 Inputs and Outputs

As per SEP, see Table 5-7.

Table 5-7: Installation and Checkout V&V Activities

Activity: Installation and checkout V&V (Process: Development)				
ID	**V & V tasks**	**Methods and Criteria**	**Input**	**Output**
1	Installation Configuration Audit	Not applicable	Not applicable	Not applicable for SIL2
2	Installation Checkout	Not applicable	Not applicable	Not applicable for SIL2
3	Hazard Analysis	Not applicable	Not applicable	Not applicable for SIL2
4	Security Analysis	Not applicable	Not applicable	Not applicable for SIL2
5	Risk Analysis	Not applicable	Not applicable	Not applicable for SIL2
6	V&V Final Report Generation	a) Summarize in the V&V final report the V&V activities, tasks and results, including status and disposition of anomalies. b) Provide an assessment of the overall software quality and provide recommendations as per the Lessons Learned Guide. Perform inspection as per Inspection Guide document #SWI-05.	All Test Reports. All Inspection Forms. All Code Walkthrough Forms. Inspection Form and SVVR Document Inspection Checklist. V&V activity summary report(s)	SVVR and its Inspection Form Lessons Learned Form(s).

5.5 Operation

5.5.1 Operation V&V Activities

The Operation V&V activity is the use of the software by the end user in an operational environment. The Operation V&V activity addresses operational testing, system operation and user support.

5.5.1.1 Tasks

As per SEP, see Table 5-8.

5.5.1.2 Methods and Criteria

As per SEP, see Table 5-8.

5.5.1.3 Inputs and Outputs

As per SEP, see Table 5-8.

Table 5-8: Operation V&V Activities

Activity: Operation V&V (Process: Operation)				
ID	**V & V tasks**	**Methods and Criteria**	**Input**	**Output**
1	Evaluation of New Constraints	Evaluate new constraints on the system or software requirements to verify the applicability of this SVVP. Software changes are maintenance activities (see Section 5.6).	SPR SQAP. SVVP New constraints	Updated SPR.
2	Proposed Change Assessment	Assess proposed changes To determine the effect of the changes on the system. Determine the extent to which V&V tasks would be iterated. Perform assessment as per SEP's SCG-2100.	SPR.	Updated SPR
3	Operating Procedures Evaluation	Not applicable	Not applicable	Not applicable for SIL2
4	Hazard Analysis	Not applicable	Not applicable	Not applicable for SIL2
5	Security Analysis	Not applicable	Not applicable	Not applicable for SIL2
6	Risk Analysis	Not applicable	Not applicable	Not applicable for SIL2

5.6 Maintenance

5.6.1 Maintenance V&V Activities

The objectives of the Maintenance V&V are to assess proposed changes and their impact on the software, evaluate anomalies that are discovered during operation, assess migration requirements, and re-perform V&V tasks.

5.6.1.1 Tasks

As per SEP, see Table 5-9.

5.6.1.2 Methods and Criteria

As per SEP, see Table 5-9.

5.6.1.3 Inputs and Outputs

As per SEP, see Table 5-9.

Table 5-9: Maintenance V&V Activities

Activity: Maintenance V&V (Process: Maintenance)				
ID	**V & V tasks**	**Methods and Criteria**	**Input**	**Output**
1	SVVP Revision	a) Revise the SVVP to comply with approved changes. b) When the development documentation required by this standard is not available, generate a new SVVP and consider the methods in Annex D for deriving the required development documentation	Previous SVVP. Approved SPR. Schedules. Inspection Form and SVVP Document Inspection Checklist.	Updated SVVP and its Inspection Form.
2	Proposed Change Assessment	Assess proposed changes To determine the effect of the changes on the system. Determine the extent to which V&V tasks would be iterated. Perform assessment as per SEP's SCG-2100.	SPR.	Updated SPR
3	Anomaly Evaluation	Evaluate the effect of software operation anomalies.	SPR	Updated SPR
4	Criticality Analysis	a) Determine the software integrity levels for proposed modifications. b) Validate the integrity levels provided by the maintainer. For V&V planning purposes, the highest software integrity level assigned to the software shall be the software system integrity level.	SPR. FMECA.	Updated FMECA, if needed. Updated SVVP, if needed.
5	Migration Assessment	Not Applicable. There are no migration requirements.	-	-
6	Retirement Assessment	Not Applicable. There are no retirement requirements.	-	-
7	Hazard Analysis	Not applicable	Not applicable	Not applicable for SIL2
8	Security Analysis	Not applicable	Not applicable	Not applicable for SIL2
9	Risk Analysis	Not applicable	Not applicable	Not applicable for SIL2
10	Task Iteration	Perform V&V tasks, as needed, to ensure that: a) Planned changes are implemented correctly; b) Documentation is complete and current; c) Changes do not cause unacceptable or unintended system behaviors.	SPR (approved changes).	SPR closed.

6 V&V REPORTING REQUIREMENTS

V&V activities are based on the VSRS's SEP. The activities are initially approved by the PM and the STL. V&V activities implementation are documented and reported into the Work Breakdown Structure (WBS) and the schedule of the project.

Implementation results of V&V Reporting are documented in the following:

1. The Audit Report (S13-22 and Quality Database (For Audit and IAR)) is used to document audit results;
2. The Minutes of Meeting is used to report the review and activities approval of management and members involved in the project during the Project Review Meeting and Senior Review Meeting;
3. The Inspection Form (Technical and Quality) generated from the inspection database is used to document and report results of inspection on the work products;
4. The Code Walkthrough Form is used to document and report results of source code inspections;
5. The Software Problem Report (Clear Quest database) is used to document and report software issues found after a baseline or release of the work product.

7 V&V ADMINISTRATIVE REQUIREMENTS

7.1 Anomaly Resolution and Quality IAR Database.

The Improvement Action Request (IAR) Form shall be used to document and track the Improvement Action Request on a software activity, documentation or work product during the project. The IAR indicates the non-conformance, standard requirements that shall be followed, the immediate improvement required, the root cause of the non-conformance, and the permanent improvement to be implemented to eliminate the recurrence of that type of non-conformance. The SQA shall be in charge to generate, control and perform the follow up on the IAR. SQA will also ensure that the permanent improvement has been implemented on time and as per the plan.

The Quality IAR Database shall be used to generate IAR forms and to track and monitor progress on the corrective action issues. The IAR Database is also used to perform metric and statistical data to analyze the trends of the non-conformances to improve future projects.

Reviews performed during the project will follow the same IAR Form and method.

The Software Problem Report (SPR) Form (Clear Quest database) shall be used to control, track and monitor issues found after a software work product has been baselined or released to the client. Software problem reporting and tracking is performed as per the project's SCMP.

The Inspection Database shall be used to document and track to closure issues found on the software documentation. The resulting Inspection Forms provides evidence of V&V activities execution.

7.2 Task Iteration Policy

When modifications are made to software documentation or products, Verification and Validation will be performed again. The impact of changes onto downstream work products shall be analyzed. The analysis is used as a basis to determine the level of V&V activities required.

Any nonconforming items or problem reports are received and stored by the Software Configuration Control Board (SCCB). The SCCB will access the tasks and assign the resources for addressing these issues. The hardware and software designers will carry out the tasks and redo review or qualification of all items affected. A review or qualification report is completed and archived. The SCCB will review the modification to ensure that they do not affect any other item in the project such as system hardware, technical documentation, drawing, etc. Affected documentation shall be revised.

After the software is baselined and qualified, the Software Version Description (SVD) document is generated. All modifications made to a subsequent version of this software will be recorded in a distinct Software Version Description (SVD) document. After the baseline is approved, any modification will be made through a Software Problem Report.

7.3 Deviation Policy

The SEPG is responsible for approving the modification on the SEP. SEPG shall evaluate the modification as per the impact on the final quality of the project and the traceability to the SEI CMMI level 2. The SEPG has the authority to reject a submitted modification to the software project. SEPG will keep documented evidence if an activity is tailored out of the project. Evaluation of the modification will consider the effects of risk, impact, scheduling, and cost on the project. Any modifications on the software plan will be presented to Hyundai Rotem and Regional Transportation District for approval and sent electronically to all users affected by the plan. As required, formal meeting will be performed to explain major modifications on the project plan.

The SQA representative shall monitor and periodically audit the activities requested by the software plan and report the non-conformities to the PM and the STL for improvement or corrective action.

7.4 Control Procedures

The control procedures are documented in the SCMP document #201111186.

7.5 Standards, Practices, and Conventions

This section identifies the standards, practices, conventions and metrics this project adopts, and how compliance with these items is monitored and assured.

- IEEE standards will be followed to produce the software documentation.
- SEI SW-CMMI Level 2, V1.2 will be followed to produce and develop the software activities in the software maintenance project.
- Internal Audit activities, documentation, verification, and tracking will follow the project's SQAP.
- Configuration Management activities, identification, baselines, released, status accounting, SCCB, SPR will follow the project's SCMP.
- Document Inspection will follow the Inspection Guide (SWI-05).
- Source Code Walkthrough will follow the Code Walkthrough Guide (SWI-06).
- Lessons Learned activities on Software Process Improvement will follow the Lessons Learned Guide (SWI-07).
- Software Project Review Meeting activities, sequence and contents will follow the SPRM guide (SWI-08).
- Risk evaluation, mitigation, and tracking will follow the Risk Guide (SWI-16).
- IEEE Std. 1012-2004
- IEEE 1558-2004
- EN 50128

8 V&V DOCUMENTATION REQUIREMENTS

This section describes the purpose, format and content of the V&V test documents.

Table 8-1: V&V Documentation Requirements

V&V document	Purpose	Format	Content
Software Test Plans[1]	Presents the general test approach and methodologies.	As per IEEE Std 829 Section 4 and IEEE Std. 1558. Document number shall be as per EWI-006.	As per IEEE Std 829 Section 4 and IEEE Std. 1558.
Test Designs	Specifies refinements of the test approach and to identify the features to be tested by this design and its associated tests.	As per IEEE Std 829 Section 5 and IEEE Std. 1558. Included in Test Plan.	As per IEEE Std 829 Section 5 and IEEE Std. 1558. Included in Test Plan.
Test Cases	Defines a test case identified by a test design specification. Test Cases may be referenced by several Test Designs specifications.	As per IEEE Std 829 Section 6 and IEEE Std. 1558. Included in Test Procedures.	As per IEEE Std 829 Section 6 and IEEE Std. 1558. Included in Test Procedures.
Test Procedures[2]	Specifies the steps for executing a set of test cases or, more generally, the steps used to analyze a software item in order to evaluate a set of features.Detailed set of instructions, test inputs, execution conditions, and expected results.	As per IEEE Std 829 Section 7 and IEEE Std. 1558. Document number shall be as per EWI-006.	As per IEEE Std 829 Section 7 and IEEE Std. 1558.
Test Reports	Provides a chronological record of relevant details about the execution of tests.	As per IEEE Std 829 Section 9 and IEEE Std. 1558. Test Reports are hand written results directly in the test procedure that is scanned and generated under a new document number.	As per IEEE Std 829 Section 9 and IEEE Std. 1558.
SVVR	The SVVR tabulates the results of the execution of all Verification and Validation (V&V) activities described in this SVVP.	As per VSRS's S17-14 SVVR Template document.	Summary of all life cycle V&V tasks.
Test report[2]	Documents any event that occurs during the testing process that requires investigation.	Use same form & database as SPR (Software Problem Report).	Use same form & database as SPR (Software Problem Report).

[1] Software Test Plans will be developed according to what is defined in the SQAP doc #201111208 chapter 4.9
[2] Check SQAP chapter.4.9