DENVER RTD EAGLE P3
COMMUNICATION SYSTEM

FIELD MODIFICATION INSTRUCTIONS
FMI #7: HARDWARE MODIFICATION

CONTRACT NO.	**P110701149**
CDRL NO.	**N/A**
WIS DOC. NO.	**42A-2016-0027**
REVISION:	**1.1**
DESIGNED:	**D. S. JANG**
REVIEWED:	**J. Y. LEE**
APPROVED:	**B. J. JONE**
DATE:	**9/08/2016**

WOOJIN
Industrial Systems Co., Ltd.

Record of Revisions

Rev.	Date	Description	Entered By
1.0	6/29/2016	Initial release	D. S. Jang
1.1	9/08/2016	Add the section 3.0	D. S. Jang

© Copyright Woojin Industrial Systems Co., Ltd.

Table of Contents

1. INTRODUCTION 4
2. SUMMARY 4
3. AUDIO TUNING CIRCUIT DESCRIPTION 4
4. INSTRUCTIONS 6
5. TESTING 9

© Copyright Woojin Industrial Systems Co., Ltd.

1. INTRODUCTION

This FMI provides instructions to install the Audio Filter board to CRA

2. SUMMARY

This modification intends to implement the engineering change proposed as RNE1002-U518-11. The modification applies to CRA units installed on the whole fleet.

3. AUDIO TUNING CIRCUIT DESCRIPTION

The input-output impedance of the input audio signal and the noise signal changed from HI to LO. And the normal audio signal amplification and the noise signal is decreased -10dBm by configured B.P.B (Band-Pass Filter) circuit.

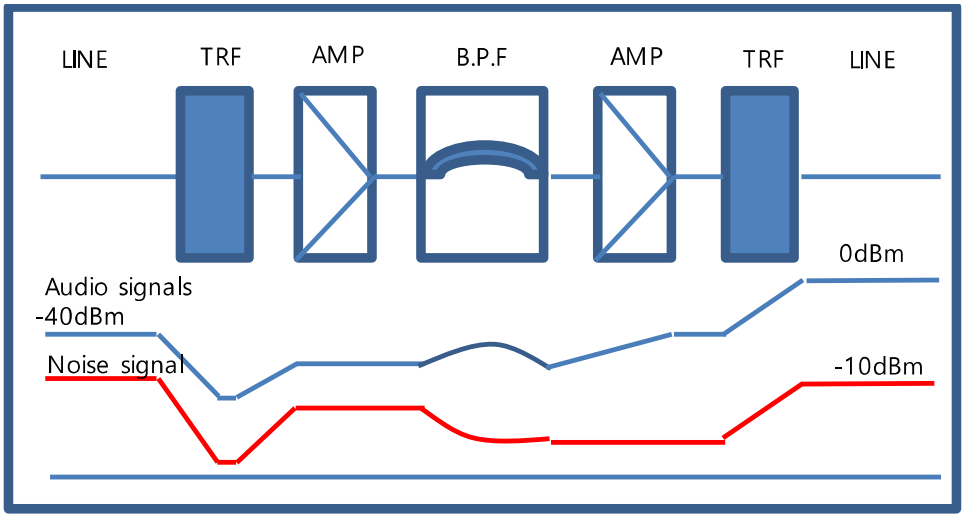

Figure 1 – AF Board block diagram

© Copyright Woojin Industrial Systems Co., Ltd.

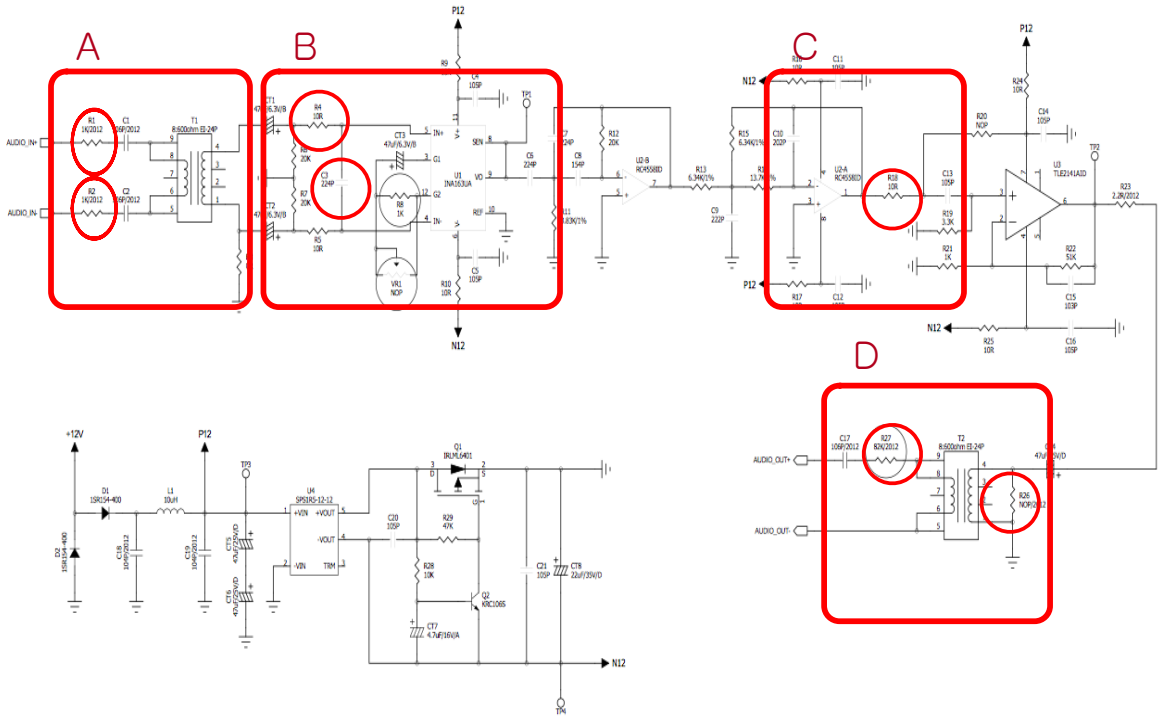

Figure 2 – AF Board schematics

Items	First Improvement (End of June)	Last Improvement (End of August)	Remarks
A(R1)	1K Ω → 0 Ω	Same as First Improvement	Resistor
A(R2)	1K Ω → 0 Ω	Same as First Improvement	Resistor
B(R4)	-	10 Ω → 47K Ω	Resistor
B(C3)	-	224P → 102P	capacitor
C(R18)	-	10 Ω → 47K Ω	Resistor
D(R26)	-	NOP → 8.2 Ω	Resistor
D(R27)	-	82K Ω → 0 Ω	Resistor

© Copyright Woojin Industrial Systems Co., Ltd.

- A : The audio input impedance change
  - When R1, R2 component changed (1kΩ ->0Ω), the line impedance changed from 1k Ω to 0Ω and remove the derelict noise signal on the transformer (TRF – T1 600:8).
- B : Noise remove
  - The noise signal is filtered by changing the input resistance (10Ω -> 47kΩ) of R4 component due that the input audio signal includes the noise.
- C : The audio frequency change (B.P.B)
  - The audio frequency from 4 kHz to 5 kHz is partially blocked by changing R18 component.
- D : Output impedance change
  - The impedance changed from HI to LO. The noise is blocked and the audio output signal is filtered by changing the R27 component.

4. INSTRUCTIONS

1) Place the COMCB to OFF position

2) Unscrew 2 mounting bolts on the SP panel

3) Remove the SP panel from CRA

4) Plug in the Audio Filter (AF) board to the slot where the SP panel was removed

5) Fasten 2 mounting bolts on the AF front panel

6) Place the COMCB to ON position

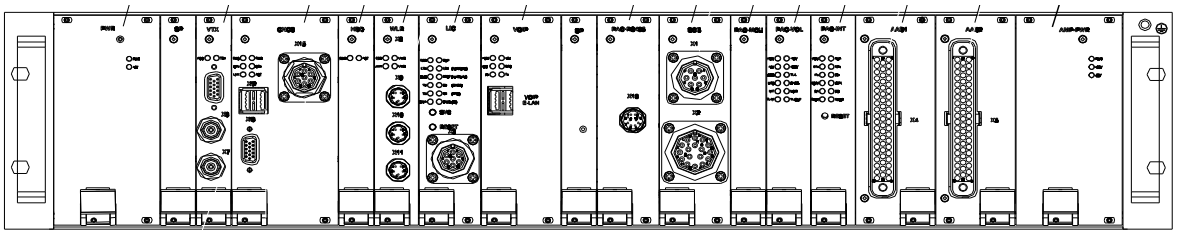

Figure 3 – AF Board Location

© Copyright Woojin Industrial Systems Co., Ltd.

Figure 4 – AF Board PCB

© Copyright Woojin Industrial Systems Co., Ltd.

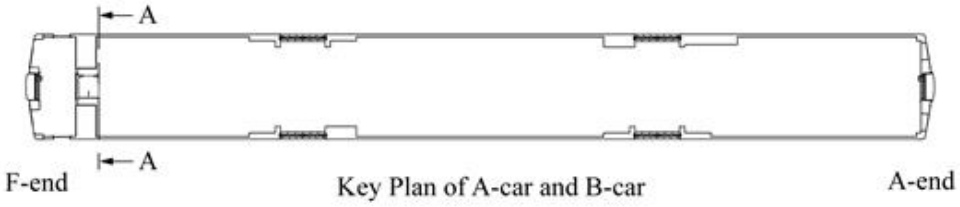

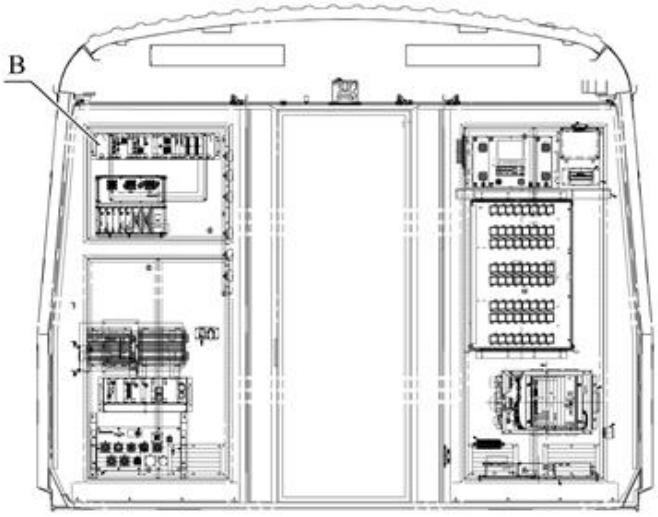

Section A-A

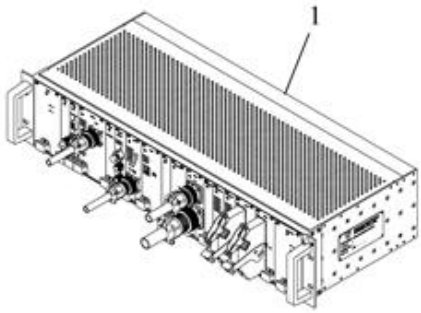

Detail B

Figure 5 – CRA Location

© Copyright Woojin Industrial Systems Co., Ltd.

5. TESTING

1) Observe the LED indicators on the AF front panel

2) Verify that all LED indicators are lit

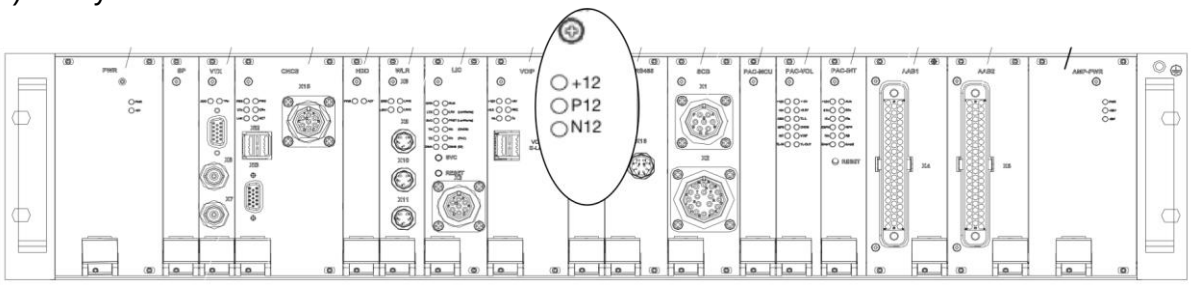

Figure 6 – AF PCB LED

3) Download the recorded audio files from CRA

4) Check the audio quality whether the recorded audio file can be recognized or not

(Recognized: Pass, Un-recognized: Failed)

© Copyright Woojin Industrial Systems Co., Ltd.