UniFinger SFM3050-TC

Datasheet

Ver. 1.0

Copyright © 2004 by Suprema, Inc.

Revision History

Rev No.	Issued date	**Description**
1.0	Dec 3, 2004	Initial Release

Important Notice

Information in this document is provided in connection with Suprema products. No license, express or implied, by estoppel or otherwise, to any intellectual property rights is granted by this document. Except as provided in Suprema's Terms and Conditions of Sale for such products, Suprema assumes no liability whatsoever, and Suprema disclaims any express or implied warranty, relating to sale and/or use of Suprema products including liability or warranties relating to fitness for a particular purpose, merchantability, or infringement of any patent, copyright or other intellectual property right. Suprema products are not intended for use in medical, life saving, life sustaining applications, or other applications in which the failure of the Suprema product could create a situation where personal injury or death may occur. Should Buyer purchase or use Suprema products for any such unintended or unauthorized application, Buyer shall indemnify and hold Suprema and its officers, employees, subsidiaries, affiliates, and distributors harmless against all claims, costs, damages, and expenses, and reasonable attorney fees arising out of, directly or indirectly, any claim of personal injury or death associated with such unintended or unauthorized use, even if such claim alleges that Suprema was negligent regarding the design or manufacture of the part.
Suprema reserves the right to make changes to specifications and product descriptions at any time without notice to improve reliability, function, or design.
Designers must not rely on the absence or characteristics of any features or instructions marked "reserved" or "undefined." Suprema reserves these for future definition and shall have no responsibility whatsoever for conflicts or incompatibilities arising from future changes to them.
Contact your local Suprema sales office or your distributor to obtain the latest specifications and before placing your product order.

Copyright © by Suprema Inc., 2004

*Third-party brands and names are the property of their respective owners.

Contents

1. Overview 4
2. UniFinger SFM3000 Series 5
Table 1 UniFinger SFM3000 Series combinations 5
3. Features 5
4. Fingerprint Authentication Specifications 6
4.1. Fingerprint Authentication Performance 6
4.2. Fingerprint Sensor Specifications 6
5. Hardware Specifications 6
5.1. Operating range 6
5.2. Absolute Maximum Ratings 6
5.3. Electrical DC characteristics(V_{DD} = 3.3Vdc, T_{OP} = 25°C) 6
5.4. Interface 7
5.5. Connector Specifications 7
5.5.1. J1 pin assignment 7
5.5.2. J2 pin assignment 8
5.6. Physical Dimensions 8
Figure 1 Main module dimensions 8
Figure 2 Sensor dimensions 9
6. Communication Protocol Summary 9
6.1. Packet Structure 9
6.2. Command Summary 10

 Copyright © 2004 by Suprema, Inc.

1. Overview

The UniFinger modules are stand-alone fingerprint systems ideal for embedded system applications where biometric security is needed. The modules are designed for manufacturers searching for an inexpensive, reliable and easy-to-integrate biometric system. The UniFinger modules provide complete fingerprint solutions by incorporating fingerprint sensor interface and embedded fingerprint recognition algorithm into a half business card sized module.

The UniFinger SFM3000 series is the latest UniFinger module equipped with world's leading fingerprint authentication algorithm (ranked No. 1 in FVC2004) and powerful DSP technology. Also, it supports wide range of fingerprint sensor interoperability giving you a freedom to select suitable sensor that most fits to your application. Furthermore, the fingerprint data for enrollment and verification are compatible among different sensors, even if they are based on different technologies. This feature of unification presents application manufacturers and system integrators with much more flexibility than ever before.

In addition to these features, the miniature sized UniFinger module has a state-of-the-art low power design making it a perfect match in a wide range of applications from battery operated mobile equipments to network based security systems. The UniFinger stands ready to meet your requirements and adapt to your applications.

 Copyright © 2004 by Suprema, Inc.

2. UniFinger SFM3000 Series

The UniFinger SFM3000 series is the latest UniFinger module equipped with world's leading fingerprint authentication algorithm, which ranked No. 1 in FVC2004. The SFM3000 series is based on powerful DSP technology, optimized for performance while minimizing power consumptions.

Table 1 summarizes available combinations of modules and sensors.

Table 1 UniFinger SFM3000 Series combinations

Model name	Supported sensors	Base module
SFM3000-FL	Authentec AF-S2	SFM3000
SFM3000-PR	BMF BLP-100	
SFM3010-FC	Atmel Fingerchip	SFM3010
SFM3020-OP	Optical sensor I	SFM3020
SFM3040-OC	Optical sensor II	SFM3040
SFM3040-OL	Optical sensor III	
SFM3050-TC	UPEK TouchChip	SFM3050

3. Features

- **World best authentication performance (ranked No. 1 in FVC2004)**
- High speed fingerprint verification
- Compact size
- Low power consumption
- Fast power on time
- Supports various communication interfaces
- Supports fingerprint data encryption
- Supports various fingerprint sensors
- Highly configurable I/O signals
- Operates with a single 3.3v dc supply

 Copyright © 2004 by Suprema, Inc.

4. Fingerprint Authentication Specifications

4.1. Fingerprint Authentication Performance

EER*	<0.1%
Enrollment time	<1 sec
Verification time	<1 sec

*EER is dependent on databases

4.2. Fingerprint Sensor Specifications

Device Name	UPEK TouchChip TCS1CD
Sensor technology	Capacitive
Sensing area	12.8mm x 18.0mm
Image size(pixels)	256x360
Image resolution	508 dpi

5. Hardware Specifications

5.1. Operating range

Parameter	**Symbol**	**Min**	**Typ**	**Max**	**Units**
Supply voltage	V_{DD}	3.0	3.3	3.6	V
Operating temperature	T_{OP}	0		70	°C

5.2. Absolute Maximum Ratings

Parameter	**Symbol**	**Min.**	**Max.**	**Units**
Power supply voltage	V_{DD}	-0.3	3.6	V
Input voltage on signal pins	V_{IN}	-0.3	3.6	V

5.3. Electrical DC characteristics(V_{DD} = 3.3Vdc, T_{OP} = 25°C)

Parameter	**Symbol**	**Min.**	**Typ.**	**Max.**	**Units**
Supply current (idle)	I_{DD1}		60		mA
Supply current (scanning)	I_{DD2}			130	mA
Supply current (identifying)	I_{DD3}		120	150	mA

 Copyright © 2004 by Suprema, Inc.

Parameter	Symbol	Min.	Typ.	Max.	Units
High level input voltage	V_{IH}	2.0		3.6	V
Low level input voltage	V_{IL}	-0.3		0.6	V

5.4. Interface

Type	Description
UART	3.3V CMOS level Baud rates up to 921.6kbps (factory default is 115.2kbps) RS232/422/485 supported via additional level converter
Digital I/O	3.3V CMOS level 8 ports separately configurable 26bit Wiegand I/O supported via additional level converter

5.5. Connector Specifications

Connector	Usage
J1	Host interface port I
J2	Host interface port II (Molex 53261-8090 compatible)
J3	Debug port for factory use only
J4	Sensor interface port, 20 pin FPC/FFC

5.5.1. J1 pin assignment

Name	Pin number	Functions
VSS	4,14	Power Ground
VDD	9	Power pin. 3.3Vdc
GPIO_0 ~ GPIO_7	5,6,7,8,1,2,3, 15	3.3V CMOS, bidirectional port
H_RXD	10	Receive Data, 5V tolerant 3.3V CMOS, input only
H_TXD	11	Transmit Data, 3.3V CMOS, output only
Reserved	12, 13	Reserved for future use

 Copyright © 2004 by Suprema, Inc.

5.5.2. J2 pin assignment

Name	Pin number	Functions
VDD	1,	Power pin. Must be connected to 3.3vdc
Reserved	2, 3	Reserved for future use
VSS	4,7	Power Ground
H_RXD	5	Receive Data, 5V tolerant 3.3V CMOS, input only
H_TXD	6	Transmit Data, 3.3V CMOS, output only
SHIELD	8	Ground Shield

5.6. Physical Dimensions

Parameter	Values
Main board	55mm x 40mm x 8mm (WxLxH)
Sensor	20.4mm x 27mm x 3.5mm (WxLxH)

Figure 1 Main module dimensions

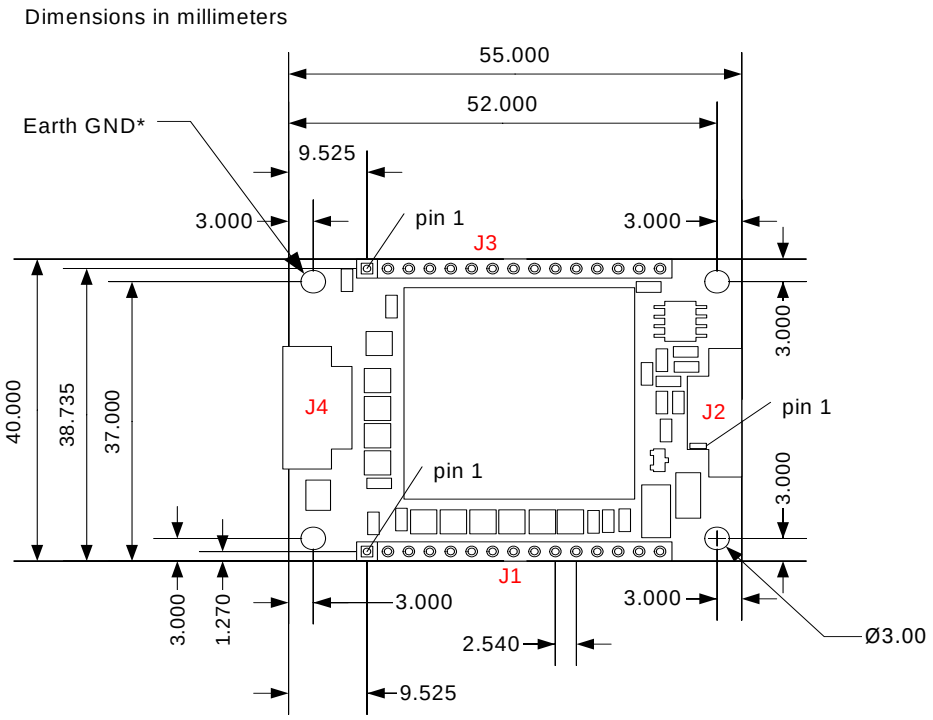

* Connect 'Earth GND' hole with system chassis or earth ground for optimum ESD characteristics.

 Copyright © 2004 by Suprema, Inc.

Figure 2 Sensor dimensions

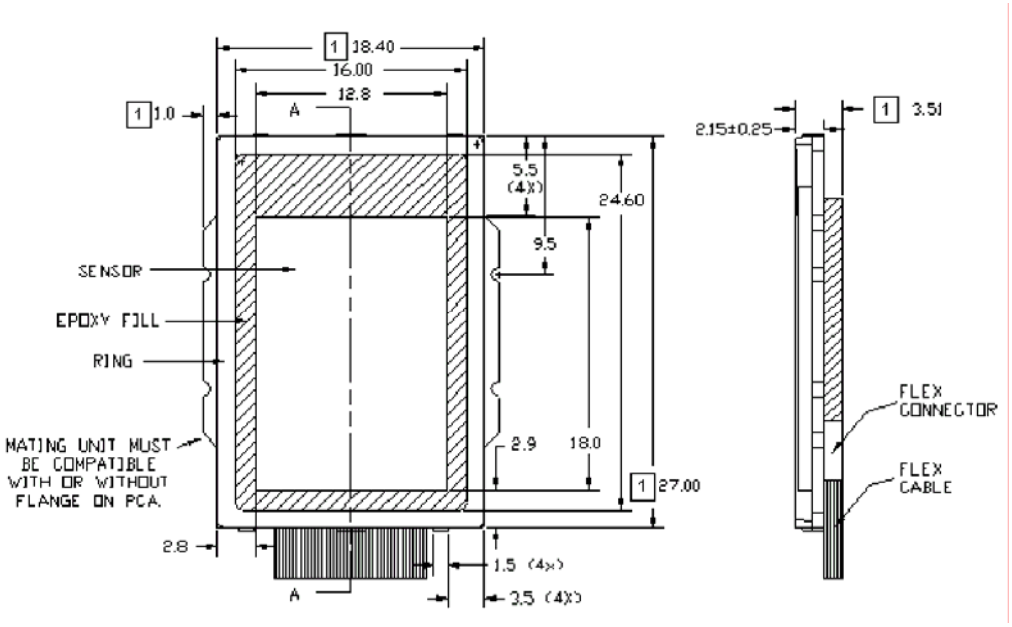

Dimensions in millimeters. Image from UPEK

6. Communication Protocol Summary

The UniFinger provides a proprietary communication protocol for easy interface with most host systems. The protocol based on fixed sized packets. Only fingerprint image, template data, and user lists are transmitted as appended to the packet. Checksum functionality is supported to ensure consistency of transmitted data.

Please refer to *UniFinger Protocol Manual* for detailed information.

6.1. Packet Structure

Start code	Command	Param	Size	Flag	Checksum	End code
1byte	1byte	4bytes	4bytes	1byte	1byte	1byte

 Copyright © 2004 by Suprema, Inc.

6.2. Command Summary

Command	Code	Description
SW	0x01	System parameter write
SF	0x02	System parameter save
SR	0x03	System parameter read
SS	0x04	System status check
ES	0x05	Enroll by scan
EI	0x06	Enroll by image
ET	0x07	Enroll by template
VS	0x08	Verify by scan
VI	0x09	Verify by image
VT	0x10	Verify by template
VH	0x22	Verify host template by scan
IS	0x11	Identify by scan
II	0x12	Identify by image
IT	0x13	Identify by template
RI	0x20	Read image
RT	0x14	Read template
SI	0x15	Scan image
ST	0x21	Scan template
DT	0x16	Delete template
DA	0x17	Delete all templates
LT	0x18	List user ID
CT	0x19	Check user ID
FP	0x23	Fix all provisional templates
DP	0x24	Delete all provisional templates
KW	0x34	Encryption key write
KS	0x35	Scan template with challenge data
GR	0x36	Read GPIO configuration
GW	0x37	Write GPIO configuration
GC	0x38	Clear GPIO configuration
GD	0x39	Set default GPIO configuration

 Copyright © 2004 by Suprema, Inc.

Contact Info

- **Headquarters**

Suprema, Inc. (http://www.supremainc.com)
16F Parkview Office Tower, Jeongja, Bundang, Gyeonggi, 463-863 Korea
Tel: +82-31-783-4502
Fax:+82-31-783-4503
Email: sales@supremainc.com, support@supremainc.com

 Copyright © 2004 by Suprema, Inc.