Quester Tangent Corporation

Denver Regional Transportation District (Denver RTD)
Contract N8US-30-F0003

Monitoring and Diagnostic System (MDS)

System Functional Description

- **Central Diagnostic Terminal**
- **Fault Display Panel**

Prepared by: **Christian Leclerc**
Lead Software Engineer

Verified by: **Steve Dyck**
Lead Hardware Engineer

Approved by: **Greg Nuttall**
Project Engineer

Issue Date: 12 October 2011
Document Number: DDN-0432-0002
Revision: R08

QUESTER TANGENT™
Making Data Intelligent™

DATE	REVISION	DESCRIPTION
14-Apr-2011	R00 (Draft)	Draft created for preliminary review.
3-June-2011	R01	Release for PDR
16-Jun-2011	R02	Update to data tranfer methods
19-July-2011	R03	Section 2.6 – Add Test Equipment description Rename LDTS to Subsystem throughout the document Combine ATC and PTC as the ATC-PTC
26-Aug-2011	R04	Section 2.3.3.1 - Add CDT User Interface screen shots Section 2.4.3 – Add FDP drawing Rename C166-Boot to ST276-Boot
02-Sept-2011	R05	Release for FDR Section 2.3, - Comm system interaction update Section 6.4.13 – ATC/PTC system interaction update
23-Sept-2011	R06	Removed Input Ethernet References Section 4, 6.3.2, 6.4.8, 6.4.11, 7.3.1 - Wayside communication update
27-Sept-2011	R07	Updated video screen temperature range. Section 6.4.3.1 Updated MDS part numbers. Section 2.7
12-Oct-2011	R08	Updated references

COPYRIGHT

Copyright © 2011 by Quester Tangent Corporation. All rights reserved. This item and the information contained herein are the property of Quester Tangent Corporation. No part of this document may be reproduced, transmitted, stored in a retrieval system, or translated into any language or computer language in any form or by any means, electronic, mechanical, magnetic, optical, chemical, manual, or otherwise, without the express written permission of Quester Tangent Corporation.

Quester Tangent Corporation
6582 Bryn Rd
Saanichton, BC, Canada V8M 1X6
Tel: 250-656-6677
Fax: 250-655-4696

www.questertangent.com

Table of Contents

1 Introduction 8
1.1 Scope 8
1.1.1 Requests for Approval 8
1.2 Acronyms and Abbreviations 8
1.3 Definitions 8
1.4 Referenced Documents, Drawings and Publications 8
2 System Overview 10
2.1 Design Concept 10
2.2 System Architecture 11
2.3 System Functional Description – Central Diagnostic Terminal 12
2.3.1 CDT Context 14
2.3.2 CDT Block Diagram 14
2.3.3 CDT Vehicle and Operator Interfaces 14
2.3.3.1 Operator Interface 14
2.3.3.2 Electrical Interface 17
2.3.3.3 Mechanical Interface 17
2.4 System Functional Description – Fault Display Panel 17
2.4.1 FDP Context 18
2.4.2 FDP Block Diagram 18
2.4.3 FDP Vehicle and Operator Interfaces 18
Operator Interface 18
Electrical Interface 19
2.4.3.1 Mechanical Interface 19
2.5 Fault Trainlines – Functional Description 20
2.5.1 Fault Trainlines – Design Overview 20
2.5.2 Fault Trainlines – Electrical Schematics 20
2.5.3 Fault Trainline Bias Voltage, Wetting Current, Coupler Leakage 20
2.5.4 Fault Trainline – Bias Resistor Sizing 21
2.5.5 Fault Trainlines – Electrical Component Descriptions 21
2.5.6 Fault Trainline – I/O Mapping 22
2.6 Test Equipment 22
2.7 Warranty Period Spare Parts List 23

3 Compliance Matrix 24
4 Interface with Other Equipment 24
5 Allocation of Technical Specification Requirements 24
6 System/Subsystem Definitions 25
6.1 CDT Hardware 25
6.1.1 CDT Power Distribution 25
6.1.2 CDT Inter-module Communications 25
6.1.3 CDT Microcontroller Core 25
6.1.4 CDT Module Description 25
6.1.4.1 CDT Control Module 26
6.1.4.2 Video LED Module 26
6.1.4.3 Input / Output Module 27
6.2 FDP Hardware 27
6.2.1 FDP Hardware Description 27
6.3 CDT Software 28
6.3.1 Software Overview 28
6.3.2 CCP Software 28
6.3.3 NIP Software 30
6.3.4 IOP Software 30
6.3.5 Inter-processor Communications 31
6.3.6 Software Configuration Item Table 31
6.3.7 Application Software Configuration Items 33
6.3.8 COTS Software Configuration Items 34
6.3.8.1 Neuron Firmware 34
6.3.9 Other SCIs 35
6.3.10 Software Safety 35
6.4 System Functions 35
6.4.1 CDT Operating Modes 35
6.4.2 Power Management 35
6.4.3 CDT Display Functions 36
6.4.3.1 General 36
6.4.3.2 Main Screen 36
6.4.3.3 Real-Time Data Screens 36
6.4.3.4 Logged Data Screens 37
6.4.3.5 Other Screens 37
6.4.4 Discrete Inputs 37
6.4.4.1 Type 1 Inputs 37
6.4.4.2 Type 2 Inputs 38

6.4.5 Fault Trainline Control Outputs 38
6.4.6 CDT Real Time Database (RTDB) Functions 38
6.4.6.1 RTDB Subsystems 38
6.4.6.2 Status Processing 39
6.4.6.3 Parameter Conversion 39
6.4.6.4 Stale Data 39
6.4.6.5 Active Faults 39
6.4.7 CDT Logging Functions 39
6.4.7.1 General 39
6.4.7.2 Log Format 39
6.4.7.3 Logging Events 40
6.4.7.4 Log Initialization 40
6.4.7.5 Vehicle Snapshot Logging 41
6.4.7.6 Primary and Alternate Logging 41
6.4.8 CDT Equation Processing 41
6.4.9 CDT Fault Trainline Functions 42
6.4.9.1 CDT Fault Trainline Control 42
6.4.9.2 GFT Wetting Current PWM Failure Detection 42
6.4.10 CDT Configuration 43
6.4.10.1 CDT Configuration Database 43
6.4.10.2 The configuration is stored in flash memory on the CCM and is available for reading by other CCP functions.CDT Configuration Operations 44
6.4.11 CDT Wayside Data Management 44
6.4.12 CDT Car Monitoring Network Functions 45
6.4.13 Car Number 45
6.4.14 Self-test and Status Indication 45
6.4.14.1 Automatic Self Test 45
6.4.14.2 Manual Self Test 45
6.4.14.3 Heartbeat Status 46

6.4.15 Module Extreme Temperature Logging 46
6.4.16 Test Equipment Interface 46
6.4.17 PTU Functions 47
6.4.18 Password Protection 48
6.4.19 Software Version Information Query 48
6.4.20 C166 Microcontroller Software Update 48
6.4.21 Car Monitoring Network Subsystem Software Update 50
6.4.22 Neuron Based Software Update 51
6.4.23 Unused 51
6.4.24 Module Serial Numbers 51
6.4.25 Board ID and Slot ID 52
6.4.26 Real Time Clock (RTC) 52
6.4.27 Last Exception 52
7 Performance Characteristics 53
7.1 Car Monitoring Network Bandwidth Usage 53
7.2 Logging Memory Usage 54
7.3 File Transfer Time 54
7.3.1 Wayside Data Transfers 55
7.3.2 Propulsion Trace File Transfers 55
7.3.3 Friction Brake Log File Transfers 56
Appendix A: Weight Control 57

List of Tables

Table 1: Definitions 8
Table 2: Referenced Documents 8
Table 3: Denver RTD TS Functional Requirements Implemented in the CDT 12
Table 4: CDT Operator Interfaces 14
Table 5: FDP Operator Interfaces 18
Table 6: Fault Trainline Components 22
Table 7: CDT Module Description 26
Table 8: Software Configuration Items 32
Table 9: Quester Tangent Application Software SCI Functions 33
Table 10 : General Fault Trainline and General Fault LED Logic 42
Table 11: Network Variable Packet Size 53
Table 12: Network Variable Counts 53
Table 13: Logging Memory Usage Reference and Estimates 54
Table 14: CDT Wayside Data Transfer File Size 55
Table 15: Propulsion Subsystem Trace File Size 55
Table 16: Friction Brake Subsystem Log File Size 56
Table 17: MDS Weight Control Summary 57

List of Figures

Figure 1: CDT Context Diagram 14
Figure 2: CDT Main Menu Screen Shot 15
Figure 3: Real-Time Data Screen Shot 16
Figure 4: Logged Data Screen Shot 16
Figure 5: FDP Context Diagram 18
Figure 6: Fault Display Panel 19
Figure 7: CDT Processor Interfaces 28
Figure 8 : GFT – Normal Operation 43
Figure 9 : GFT Operation with Wetting Current Control Circuitry Failure 43
Figure 10: C166 Software Update Sequence Diagram 49
Figure 11: MDS Car Monitoring Network subsystem Software Update 50

1 Introduction

1.1 Scope

This document presents the System Functional Description (SFD) of the Monitoring and Diagnostic System (MDS) installed in the Electric Multiple Unit (EMU) Commuter Rail Cars, identified as the "Eagle P3" cars, to be manufactured by Hyundai-Rotem for the Denver Regional Transportation District (RTD).

The following MDS subsystems are described in this document:

- Central Diagnostic Terminal (CDT)
- Fault Display Panel (FDP)

This SFD also includes design descriptions for the Portable Test Unit (PTU) software when describing joint functions of the PTU and CDT. Complete system design descriptions for the PTU software and Bench Test Equipment (BTE) hardware and software are included in the Special Tools and Test Equipment Design Description (STTEDD)

1.1.1 Requests for Approval

The MDS includes various design features that require approval by the RTD Engineer, as described in the TS. The required Specification Approval Requests (SARs), accompanied by detailed support information, are sent to Hyundai-Rotem under separate cover via official correspondence for submission to RTD.

1.2 Acronyms and Abbreviations

See the project Acronyms and Abbreviations document, DCM-0432-0011.

1.3 Definitions

For purposes of this document, the following terms and definitions apply. The Authoritative Dictionary of IEEE Standard Terms (IEEE 100) should be referenced for terms not defined in this clause.

Table 1: Definitions

TERM	DEFINITION
Commercial-Off-The-Shelf	General market items typically supplied to a wide range of users for a range of applications.
Software Configuration Item	An aggregation of software that is designated for configuration management and treated as a single entity in the configuration management process. The SCI is distributed, installed, and version tracked as one item.

1.4 Referenced Documents, Drawings and Publications

This document shall be used in conjunction with the following documents, drawings and publications. If the referenced documents, drawings, or publications are superseded by an approved revision, the revision shall apply.

Table 2: Referenced Documents

PUBLISHER	DOCUMENT NUMBER	TITLE
Hyundai-Rotem	REDE112803 (R2) revised Dec. 10, 2010	Procurement Technical Specification – Monitoring and Diagnostic System
IEEE	IEEE 100	The Authoritative Dictionary of IEEE Standards, Seventh Edition
Quester Tangent	DDN-0432-0080	Car Monitoring Network Interface Control Document

PUBLISHER	DOCUMENT NUMBER	TITLE
	DDN-0432-0081	Vehicle Electrical and Connector Interface Control Document
	DDN-0432-0085	Propulsion Car Monitoring Network ICD
	DDN-0432-0086	Friction Brake Car Monitoring Network ICD
	DDN-0432-0087	Auxiliary Power Car Monitoring Network ICD
	DDN-0432-0088	HVAC Car Monitoring Network ICD
	DDN-0432-0090	Door System Car Monitoring Network ICD
	DDN-0432-0091	Communication Car Monitoring Network ICD
	DDN-0432-0092	CDT Car Monitoring Network ICD
	DDN-0432-0093	Wayside Data Transfer ICD
	DDN-0432-0097	CCTV Car Monitoring Network ICD
	DDN-0432-0064	Mechanical Assembly and Layout
	DDN-0432-0060	Special Tools and Test Equipment Design Description
	DDN-0432-0066	Block Diagrams and Schematics
	DCM-0432-0011	Acronyms and Abbreviations

2 System Overview

2.1 Design Concept

The Monitoring and Diagnostic System (MDS) is composed of a Central Diagnostic Terminal (CDT) located in a car electrical locker, and a Fault Display Panel (FDP) unit located on a panel beside the cab console. There is one CDT and one FDP per car.

The CDT obtains status information from the vehicle Local Diagnostics Test Systems (subsystems) via the MDS car monitoring network. The CDT also obtains status information from the vehicle itself by direct connection to the vehicle control wiring. The CDT logs the vehicle status information and makes this information available to the vehicle maintenance personnel either via a display on the front of the CDT or via download to the PTU laptop PC. The CDT and PTU also support file transfers to and from vehicle subsystems via the MDS car monitoring network for such functions as software update and log download.

The CDT and FDP are connected to fault trainlines that extend the length of each car and are connected to all of the cars in a train via the electrical couplers. The CDT reports fault conditions to the vehicle operator by asserting a FAULT condition on a trainline. The FDP detects the FAULT and turns on the appropriate fault LED on its front panel.

CDT network communication monitoring and management within cars is provided by an IEEE 1473 Type L compliant car network. Note that MDS documentation refers to this network as the “MDS car monitoring network” where necessary to distinguish it from other networks on the train. In general, it is called simply the “car network”.

2.2 System Architecture

DENVER MDS Network Architecture including Intelligent Subsystems with LDTS

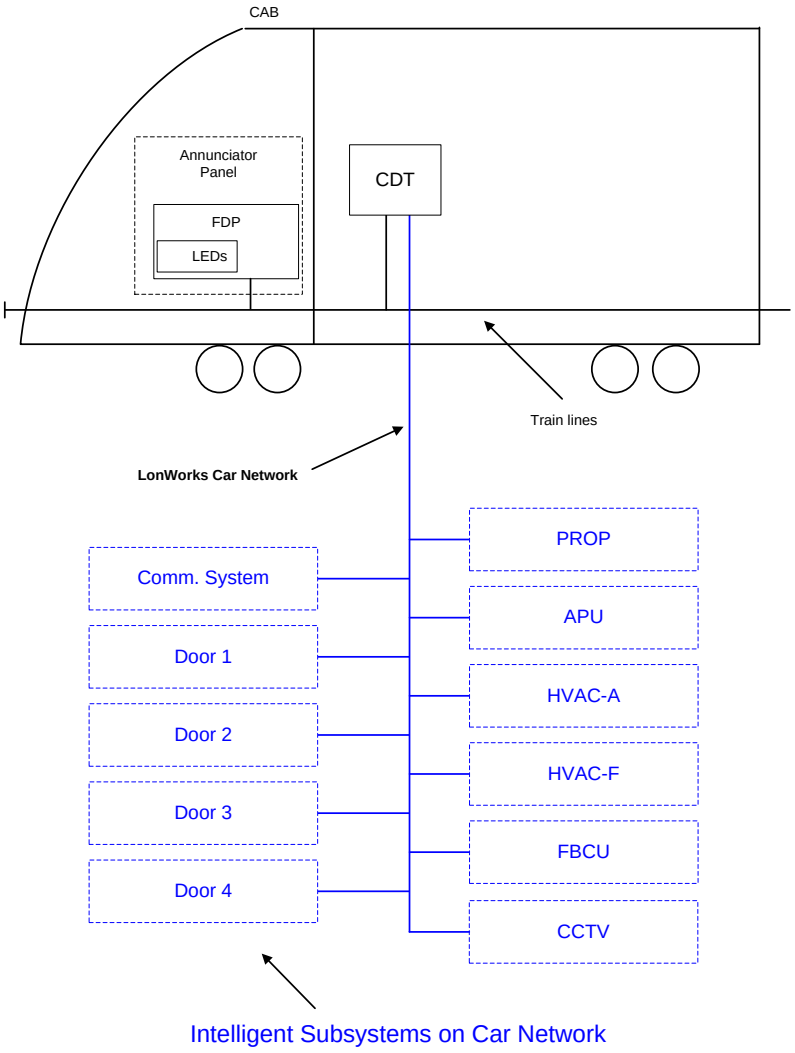

Definitions

MDS	Monitoring and Diagnostic System (CDT and FDP)
CDT	Central Diagnostic Terminal
FDP	Fault Display Panel

Legend

Car Network – LonWorks	
LonWorks Subsystems – Supplied by Others	
Train Lines	
Car Equipment – Supplied by Quester Tangent	

2.3 System Functional Description – Central Diagnostic Terminal

The Central Diagnostic Terminal (CDT) implements the Denver RTD Technical Specification functional requirements as described in the following table. The technical specification section refers to the SEPTA Technical Spec Conformed June 2006 as referred to by the Procurement Technical Specifications REDE112803 (R2) revised Dec. 10, 2010.

Table 3: Denver RTD TS Functional Requirements Implemented in the CDT

REQUIREMENT	FUNCTIONALITY	TECHNICAL SPEC SECTION
Diagnostic Display	User interface for access to CDT functions.	15.3
On-Board Testing	Presents diagnostic information to the detail level of hand-tool replaceable components.	15.1
	Initiates and monitors diagnostic testing without the use of a portable tester.	15.2
	Provides continuous self testing using built-in diagnostic routines. Identified faults are stored within the CDT diagnostic logging memory (non-volatile storage).	15.2
Maintenance Monitoring, Diagnostic, Control and Configuration	Updates networked subsystems on a periodic basis. Time updates are received across the car network from the GPS receiver through the Communications system.	1.4, 15.1
	Receives, processes and records subsystems' faults received across the car network and associates each record with UTC date and time stamp in non-volatile storage.	15.3
	Provides selectable access to stored and real-time diagnostic information via the Diagnostic Display, or via the PTU for retrieval and playback in chart recorder format.	15.3
	Sends train-level information via individually controlled Fault Trainlines outputs. Train-level information is then transmitted to the operator by activating LEDs in the operating cab.	15.3
	Receives software version information from all subsystems via the car network and displays on Diagnostic Display or PTU.	15.3
	Uploads software updates to all compliant subsystems attached to the car network from the PTU attached to the CDT.	15.3
Fault Monitoring Remote Output	Sends Fault Trainline information to the Fault Display Panel in the cab annunciator panel.	15.3
	Provides train-level information to the operating cab for each major fault connected to fault train lines.	15.3

REQUIREMENT	FUNCTIONALITY	TECHNICAL SPEC SECTION
	Provides an output for the General Fault indication LED to the operating cab for other system fault conditions. Monitors General Fault Reset trainline used to extinguish General Fault LED.	15.3
Test Equipment Interface and Car-level Connector	Provides access to CDT for downloading diagnostic information and diagnostic data.	15.3

2.3.1 CDT Context

The following diagram shows the CDT context within the vehicle:

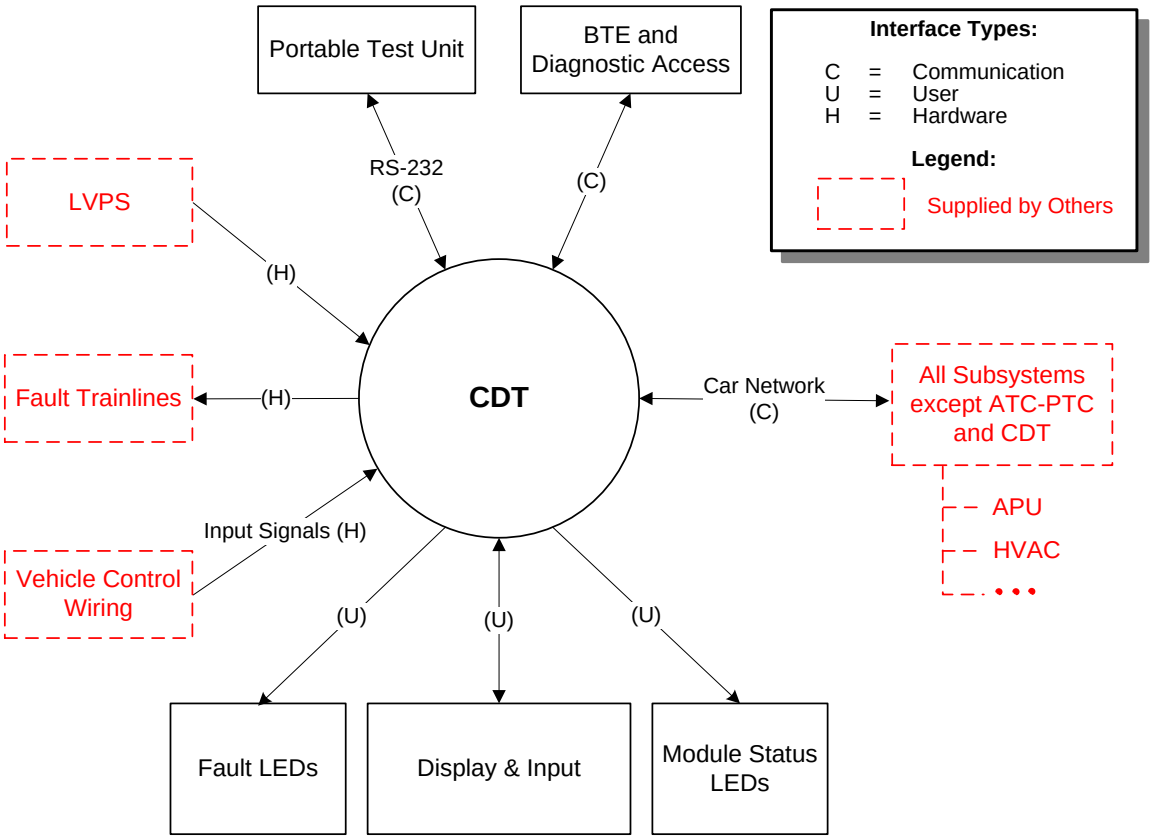

Figure 1: CDT Context Diagram

2.3.2 CDT Block Diagram

The CDT block diagram is shown in drawing DBD-MS10-1000 *Central Diagnostic Terminal – Functional Block Diagram.*

2.3.3 CDT Vehicle and Operator Interfaces

2.3.3.1 Operator Interface

The operator interfaces to the CDT are summarized in the following table. The operator is typically a maintenance technician.

Table 4: CDT Operator Interfaces

INTERFACE	FUNCTIONALITY
Car Network Status Indicators and Service Pushbutton	Front panel LEDs that provide the following functions: • Tx/Rx LEDs flash to indicate activity on the car network • Service LED illuminates when a LonWorks service message is transmitted Service Pushbutton forces a service pin message transmission

INTERFACE	FUNCTIONALITY
Module Status Indicators	Indicate the presence of power in each of the CDT modules and their health status. The health status is determined by continuous self testing using built-in diagnostic routines. Also includes an LED that indicates a display shut down due to temperature out-of-bounds.
Operator Display and Input	Displays selected vehicle and vehicle sub-system maintenance data. The displayed information can be either real time data that is updated as it is acquired or historic data retained in the data logging memory. Receives operator input via a touchscreen located in front of the display.
CDT Fault Indicators	Provides a local indication of the fault trainline status as set by the CDT. If the CDT has detected a fault and is asserting one of the fault trainlines it will illuminate the corresponding LED on the front panel.
Test Equipment Interface (PTU)	Provides access to CDT for downloading diagnostic information and diagnostic log data. Also various network functions are initiated from the PTU laptop, e.g. software update.

The following figures are screen shots from the CDT display:

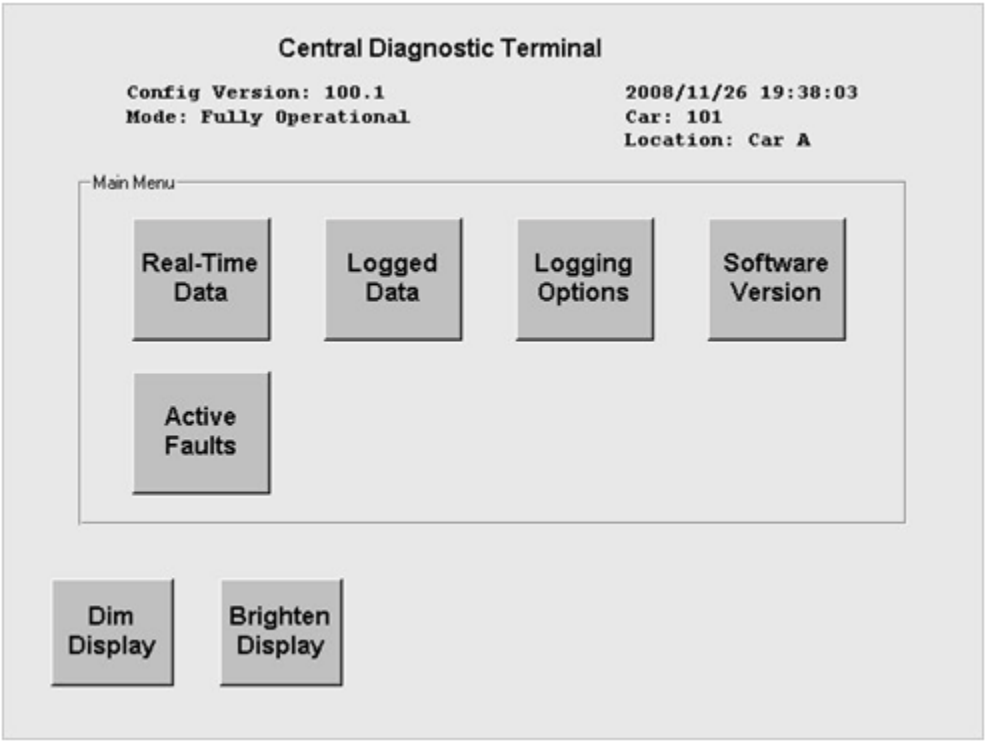

Figure 2: CDT Main Menu Screen Shot

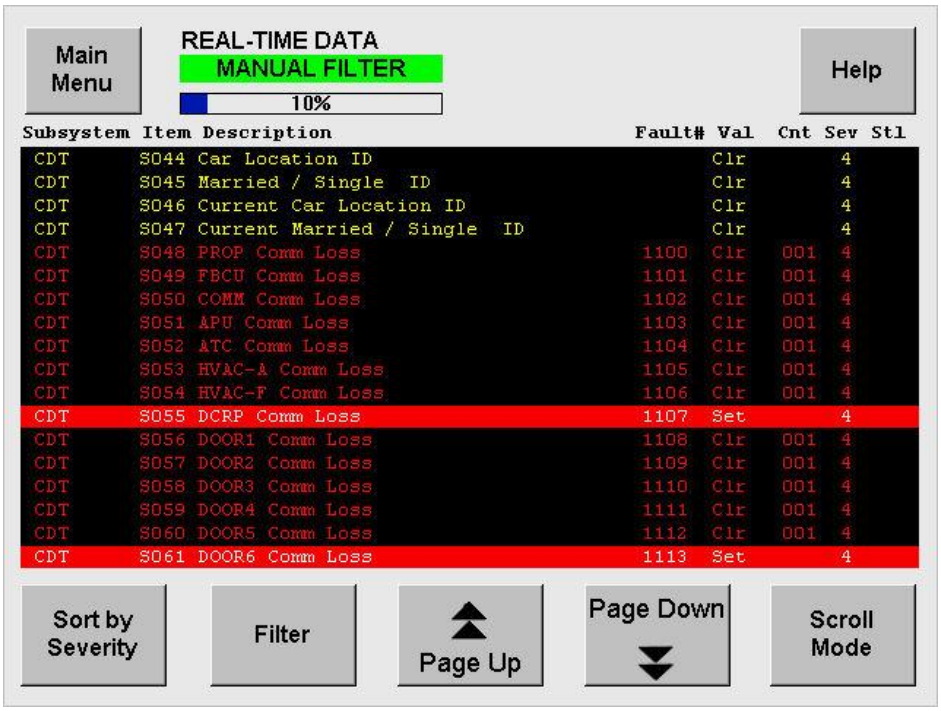

Figure 3: Real-Time Data Screen Shot

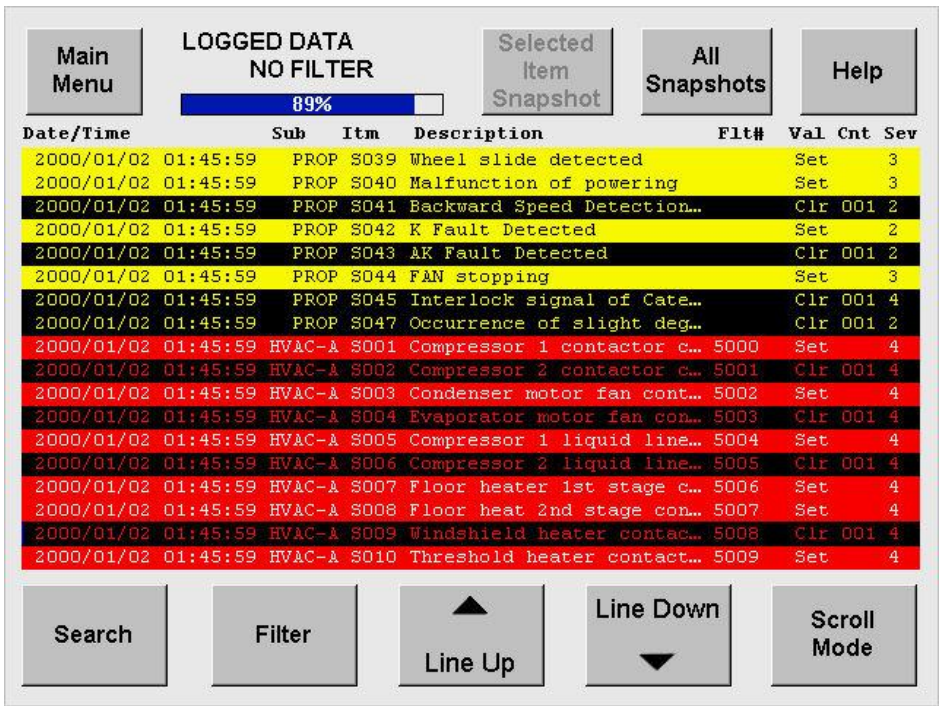

Figure 4: Logged Data Screen Shot

2.3.3.2 Electrical Interface

The connections available at the CDT electrical interfaces are summarized in the following table.

CONNECTION	DESCRIPTION
Low Voltage Power Supply (LVPS)	The system is designed to operate at a nominal voltage of 37.5 VDC across an LVPS voltage range (+24 to +48 VDC).
Car Network	The car network transfers data between microprocessor-controlled subsystems using IEEE 1473-1999 Standard for Communications Protocol Aboard Trains, Type L (Echelon LonWorks™ compliant).
Discrete Inputs	Inputs that are connected to the vehicle control wiring (local and trainlines) for the purpose of monitoring various aspects of the car and train operation
Fault Trainline Outputs	Outputs used to indicate fault status and to relay that status to the FDP units mounted in the cabs by controlling the state of the fault trainlines.
General Fault Reset Trainline Input	A discrete input connected to the General Fault Reset Trainline. When the CDT detects this trainline asserted it clears its General Fault Trainline output if it is asserted.
Portable Test Unit Interface	The PTU port provides an isolated serial RS-232 port to the CDT for use by the PTU laptop.
Bench Test Equipment (not connected to the vehicle wiring)	Two inputs, one tells the CDT it is connected to the BTE, the other forces an LED test of the CDT.

A detailed description of the CDT electrical interface to the vehicle, including operating characteristics, is provided in document DDN-0432-0081 *Vehicle Electrical and Connector Interface Control Document*.

2.3.3.3 Mechanical Interface

The CDT enclosure is an IEEE 1101.10 compliant 6U (10.5 inches high) 19 inch rack mount enclosure.

The CDT vehicle cable connectors are available on the front of the modules installed in it. Clearance is required in front of the CDT to accommodate the vehicle interface cable connectors and the routing of the vehicle interface cables.

The CDT requires 1U (1.75 inches) of clearance above and below for convective heat dissipation. Additional clearance is required in front of the CDT for operator access to the display screen and PTU port during maintenance activities.

Details of the CDT mechanical vehicle interface and the clearances required are provided on drawing DMC-MS10-0000.

2.4 System Functional Description – Fault Display Panel

The Fault Display Panel implements the Denver RTD Technical Specification functional requirements as described in the following table.

REQUIREMENT	FUNCTIONALITY
Diagnostic Display	Receives fault trainline information from the CDTs mounted in the consist.
	Displays fault trainline status in the operating cab using LEDs.
	Provides a General Fault LED for other system fault conditions.
	Provides a RESET capability for the General Fault LED.
	Indicator and annunciator lights … shaded against direct sunlight and readily visible under all ambient light conditions, and provided with intensity adjustment capability.

2.4.1 FDP Context

The FDP context is shown in the following diagram:

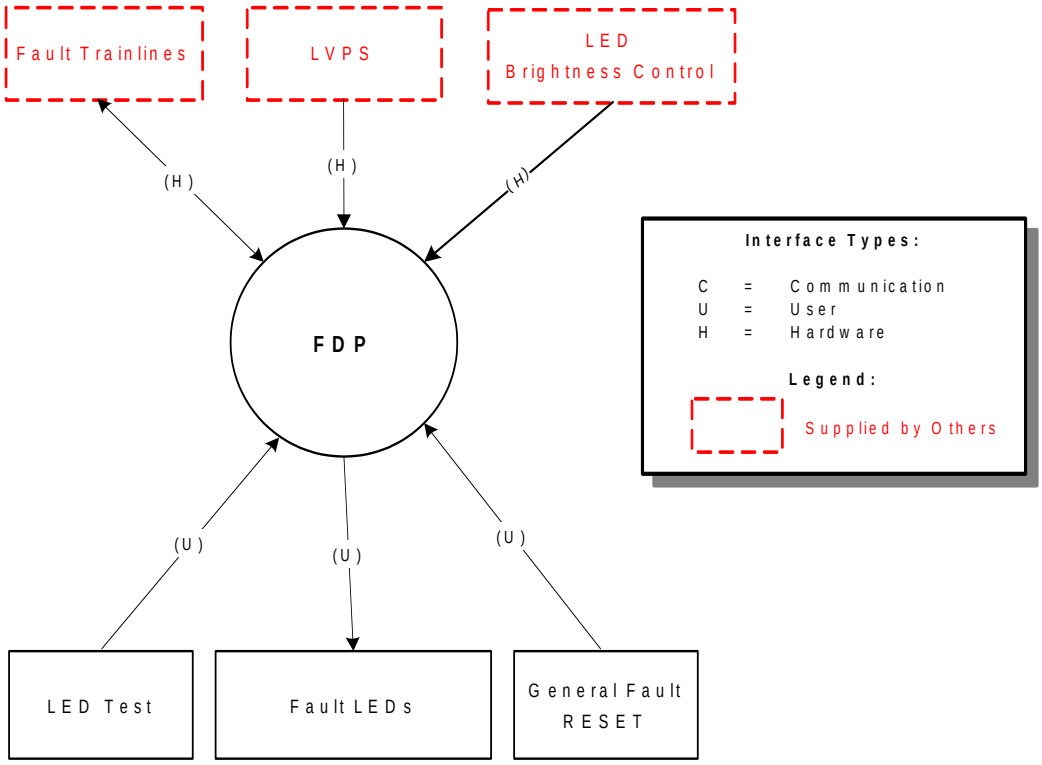

Figure 5: FDP Context Diagram

2.4.2 FDP Block Diagram

The FDP block diagram is shown in drawing DBD-DS06-1000 *Fault Display Panel – Functional Block Diagram*.

2.4.3 FDP Vehicle and Operator Interfaces

Operator Interface

The operator interfaces to the FDP are summarized in the following table. The operator is typically the driver or a maintenance technician.

Table 5: FDP Operator Interfaces

INTERFACE	FUNCTIONALITY
Fault LEDs	LEDs on the front of the FDP are illuminated to indicate a CDT in the vehicle or train has detected a fault condition in a vehicle sub-system and is asserting the fault trainline associated with the illuminated LED.
LED Test	A pushbutton on the front of the FDP that causes all of the LEDs to illuminate when it is pressed.
General Fault Reset	A pushbutton on the front of the FDP asserts the general fault reset trainline

INTERFACE	FUNCTIONALITY
	when pressed. This trainline is monitored by the CDT(s) on the vehicle or train. When this assertion is detected the CDT(s) that asserted the general fault trainline will release it. An LED on the front of the FDP indicates the state of the general fault reset trainline.

Figure 6: Fault Display Panel

Electrical Interface

The connections available at the FDP electrical interface are summarized in the following table.

CONNECTION	DESCRIPTION
Low Voltage Power Supply (LVPS)	The system is designed to operate at a nominal voltage of 37.5 VDC across an LVPS voltage range (+24 to +48 VDC).
Fault Trainline Inputs	Inputs connected to the fault trainlines. These inputs are referenced to the fault trainline common.
General Fault Reset Trainline	Output used to indicate the operator has pressed the general fault reset push button. This output is referenced to fault trainline common. It draws approximately 0.35 Amps through the trainline at a 50% duty cycle when activated.
Active Cab Input	Input used to connect the fault trainline wetting current resistors to LVPS– in an active cab. Connected to a dry contact on the cab active relay that connects the input to the fault trainline common when the cab is active.
LED Brightness	An input from the operator's console that controls the brightness of the Fault LEDs

A detailed description of the FDP electrical interface to the vehicle, including operating characteristics, is provided in document DDN-0432-0081 *Vehicle Electrical and Connector Interface Control Document*..

2.4.3.1 Mechanical Interface

The FDP mounts in the side panel of the cab and is visible to the operator. The front of the enclosure is a bezel plate that permits removal of the FDP from the vehicle through the front of the panel.

The vehicle cable connection to the FDP is located on the back of its enclosure. Clearance is required behind the FDP to accommodate the vehicle interface cable connector and sufficient slack in the vehicle interface cable to allow the FDP to be installed and removed through the front of the panel.

Details of the FDP mechanical vehicle interface and the clearances required are provided on drawing DMC-DS06-0000 *FDP Installed Dimensions*.

2.5 Fault Trainlines – Functional Description

Note: This section describes the architecture of the fault trainlines. This architecture addresses the functional requirements from the TS and PTS in a robust and fault-tolerant manner. The design and implementation of the fault trainlines is Hyundai-Rotem's responsibility. Quester Tangent has worked with Hyundai-Rotem throughout the development of this design.

2.5.1 Fault Trainlines – Design Overview

The fault trainlines run the full length of the married pair. Within the married pair they are connected to each of the FDPs and CDTs, and to the electrical couplers at each end of the married pair.

The non-asserted or NO FAULT state of the fault trainlines is defined as the condition in which the voltage between a fault trainline and the fault trainline common is HIGH. A HIGH is defined as the presence of a voltage greater than 16 VDC.

The asserted or FAULT state of the fault trainlines is defined as the condition in which the voltage between a fault trainline and the fault trainline common is LOW. A LOW is defined as a voltage less than 8 VDC.

The fault trainlines, except for the general fault trainline, are configured in a wired OR fashion. A CDT asserts a FAULT by shorting the appropriate fault trainline to common thus forcing it to a LOW state. Each FDP in the train detects this low voltage condition and turns on the appropriate fault LED. The default condition for the fault trainline outputs on the CDT is open circuit thus the wired OR configuration ensures a failed or absent CDT does not disrupt the operation of the fault trainlines in a multi-car train with multiple CDTs.

The general fault trainline is connected in a wired NOT AND configuration. This configuration ensures a faulty CDT will result in a non-resettable general fault warning. This alerts the operator that a CDT has failed and that vehicle sub-system faults might not be reported at the FDP. The general fault trainline output on each CDT is closed under software control only following successful completion of power-on self-tests. It is opened by the CDT to announce a general fault or to announce a failure within itself.

The general fault reset trainline is configured in a wired OR configuration and behaves in a manner identical to the fault trainlines. It is asserted by an FDP, i.e. pulled LOW by shorting it to the fault trainline common, when the general fault reset pushbutton is pressed on an FDP.

2.5.2 Fault Trainlines – Electrical Schematics

The FDP and CDT connections to the fault trainlines and the connection of the bias resistors, cab active relay contacts and electrical coupler contacts is illustrated in drawing DSC-0432-1500 *Fault Trainline Schematics*.

2.5.3 Fault Trainline Bias Voltage, Wetting Current, Coupler Leakage

Fault trainline bias resistors connected to LVPS in the trailing cab place the fault trainlines in a NO FAULT or HIGH state. Current sink resistors in the FDP in the active cab establish a wetting current through the fault trainlines that flows the full length of the consist from the trailing cab to the active cab.

Connection of the bias resistors to LVPS+ in the trailing cab is made through contacts on the electrical coupler and the active cab relay. Connection of the current sink resistors to the fault trainline common (LVPS–) is made through cab active contacts in the active cab. This configuration forces fault trainline wetting current to flow the full length of each fault trainline thus wetting all of its intermediate contacts. When combined with the specification that the NO FAULT condition on the trainline is a HIGH this

configuration ensures the FDP in the active cab will indicate a fault if one of the fault trainlines is open circuit or is short circuited to the common return.

The current sink resistors in the FDP are sized to draw a peak wetting current of 60 milliamps through the fault trainlines at 37.5 VDC. The wetting current draw is pulsed off and on at a nominal frequency of 4Hz with a 25% duty cycle. The 60 milliamp current is adequate to wet the contacts of the electrical couplers and other connections in the fault trainlines. The 25% duty cycle reduces the heat dissipation in the current sink resistors in the FDP thus improving its long term reliability.

Leakage current between the fault trainlines and the fault trainline common in the electric couplers is also a concern. The fault trainline bias resistors must be capable of supporting this leakage current without impairing the operation of the fault trainlines.

Note:	Wetting current is only drawn through the fault trainlines when the active cab relay in the leading cab has been activated.

2.5.4 Fault Trainline – Bias Resistor Sizing

Requirements:

- FDP wetting current draw in active cab → 60 milliamps
- LVPS operating voltage range → 24 to 48 VDC
- Minimum voltage required at an FDP to indicate a NO FAULT state → 16 VDC

Bias Resistor Impedance Calculations:

- Maximum voltage drop across a bias resistor in a NO FAULT state → 24 – 16 = 8 VDC. (Minimum LVPS operating voltage = 24 VDC; Minimum fault trainline voltage = 16 VDC)
- Maximum impedance of a bias resistor → 8 VDC / 60 mA = 133 ohm.
- Closest, commercially available, power resistor less than 133 ohm → 120 ohm

Bias Resistor Power Dissipation Calculations:

- Nominal current through bias resistor in a FAULT state → 37.5 VDC / 120 ohm = 0.313 Amps
- Power dissipation in a bias resistor in a FAULT state → 37.5 VDC x 0.313 Amps = 12 Watts
- Resistor power rating → 2 x 12 Watts = 24 Watts or greater.

The fault trainline bias resistors should be 120 ohm, 25 Watt devices.

Calculation of electrical coupler leakage withstand:

- Maximum voltage drop across a bias resistor in a NO FAULT state at nominal operating voltage of 37.5 VDC → 37.5 – 16 = 21.5 VDC.
- Maximum current leakage before a FAULT condition is created → 21.5 VDC / 120 ohm = 180 mA.

Using 120 ohm, 25 Watt bias resistors the fault trainlines will operate correctly over the full LVPS voltage range of 24 – 48 VDC and will be able to tolerate up to 180 mA of leakage current in the electrical couplers before functionality is impaired. If the leakage current exceeds this value the fault LEDs in the FDPs will be illuminated thus alerting the operator of the presence of a problem. This also means that if other current loads on the trainlines draw more than 180mA, it will trigger a false failure indicator at the FDP.

2.5.5 Fault Trainlines – Electrical Component Descriptions

A description of each of the components associated with the fault trainlines and their function is presented in the following table. Refer to DSC-0432-1500 *Fault Trainline Schematics* for details of the interconnection of the components.

Table 6: Fault Trainline Components

COMPONENT	SUPPLIER	FUNCTION
Fault Display Panel (FDP)	Quester Tangent	Monitors and displays the state of the fault trainlines. Activates the general fault acknowledge trainline when the general fault reset pushbutton on its front panel is pressed. Draws the wetting current through the fault trainlines in the active cab in conjunction with the active cab and electrical coupler contacts.
Central Diagnostic Terminal (CDT)	Quester Tangent	Monitors the status of the vehicle through the car network, and by direct connection to the vehicle control wiring. Processes this information to determine if a fault condition is present. If a fault condition is present it announces the FAULT condition by applying a short circuit between the appropriate fault trainline and the fault trainline common. If the fault condition is a general fault the general fault trainline is open circuited to announce the fault. Monitors the general fault reset trainline and reestablishes continuity of the general fault trainline if it is the unit that open circuited it. If the CDT fails to boot up correctly or detects an internal fault condition it open circuits the general fault trainline thus indicating a monitoring system fault.
Active Cab contacts (K1)	Hyundai-Rotem	A set of contacts that, in conjunction with the electrical coupler contacts, connect the FDP fault trainline bias resistors to LVPS in the trailing cab and the wetting current resistors in the FDP to the fault trainline common in the active cab.
Electrical coupler contacts (K2)	Hyundai-Rotem	A set of contacts that, in conjunction with the active cab contacts, connect the FDP fault trainline bias resistors to LVPS in the trailing cab.
Fault trainline bias resistors and diodes	Note 1	Establishes the NO FAULT condition on the fault trainlines by connecting the trainlines to the trainline bias resistors in the trailing cab through active cab relay and electrical coupler contacts. The diodes prevent current leakage between the fault trainlines disrupting their operation.
LVPS Connections	Hyundai-Rotem	LVPS connections are provided to the FDP through the active cab and electrical coupler contacts or by direct connection to LVPS in each car.

Note 1: These resistors and diodes are supplied to Hyundai-Rotem by Quester Tangent. Hyundai-Rotem is responsible for the suitability of these components in the vehicle trainline design, installation and connection to the fault trainlines in the vehicle and for all future life-cycle costs, including spares, maintenance and reliability impact.

2.5.6 Fault Trainline – I/O Mapping

Details are provided in DDN-0432-0081 *Vehicle Electrical and Connector ICD* and DSC-0432-1500 *Fault Trainline Schematics*.

2.6 Test Equipment

Special Tools and Test Equipment (STTE) are used to verify the operation of Equipment Under Test (EUT). The STTE is used in scheduled maintenance tasks and to support troubleshooting and repair of the EUT.

The STTE consists of the following:

- Portable Test Unit (PTU).
  The PTU is used in conjunction with the MDS when installed on the vehicle. The PTU is used by maintenance personnel for scheduled maintenance tasks and by repair technicians for onboard

diagnostic and repair tasks. The PTU may also be used as a diagnostic tool when the EUT has been removed from the vehicle.

- Bench Test Equipment (BTE).
  The BTE is installed in an electronics repair facility for use by test and repair technicians for bench tests and repairs. The BTE performs automated evaluation of the functional status and calibration of the EUT. The BTE is capable of identifying failures down to the LLRU level with minimal operator intervention.

Test equipment design details, including PTU software and BTE hardware and software, are provided in document DDN-0432-0060 *Special Tools and Test Equipment Design Description (STTEDD).*

2.7 Warranty Period Spare Parts List

MAIN	ITEM	SUPPLIER NAME	ITEM DESCRIPTION	UNIT	QTY	DRAWING NO	PART NO
Cab console	1	Quester Tangent	Fault Display Panel (FDP)	Per Cab	1	DAS-DS06-0000	QFG-DS06-0001
FDP	1.1	Quester Tangent	FDP Chassis	Per Cab	1		IME-DS06-6000
FDP	1.2	Quester Tangent	FDP Bezel	Per Cab	1		IME-DS06-5000
FDP	1.3	Quester Tangent	Fault LED Display (FLD)	Per Cab	1		ISA-DS06-1000
FDP	1.4	Quester Tangent	Fault Trainline Interface (FTI)	Per Cab	1		ISA-DS06-2001
Equipment Locker	2	Quester Tangent	Central Diagnostic Terminal (CDT)	Per Car	1	DAS-MS10-0000	QFG-MS10-0001
CDT	2.1	Quester Tangent	CDT Enclosure	Per Car	1	DAS-MS10-5000	ISA-MS10-5001
CDT	2.2	Quester Tangent	Input / Output Module	Per Car	2	DAS-DM08-0000	ISA-DM08-0001
CDT	2.3	Quester Tangent	Video / LED Module	Per Car	1	DAS-DS05-0000	ISA-DS05-0001
CDT	2.4	Quester Tangent	CDT Control Module	Per Car	1	DAS-MS10-1000	ISA-MS10-1000

3 Compliance Matrix

See attached documents:

DOCUMENT	PART NUMBER	NOTES
Compliance Matrix	DRM-0432-0005	

4 Interface with Other Equipment

See attached documents:

DOCUMENT	NUMBER	NOTES
Car Monitoring Network ICD	DDN-0432-0080	Describes car network electrical and protocol interfaces
Vehicle Electrical and Connector ICD	DDN-0432-0081	Describes car vehicle control wiring interfaces, connectors, and connector schedules.
Propulsion Car Monitoring Network ICD	DDN-0432-0085	
Friction Brakes Car Monitoring Network ICD	DDN-0432-0086	
Auxiliary Power Car Monitoring Network ICD	DDN-0432-0087	
HVAC Car Monitoring Network ICD	DDN-0432-0088	
Door System Car Monitoring Network ICD	DDN-0432-0090	
Communication Car Monitoring Network ICD	DDN-0432-0091	
CDT Car Monitoring Network ICD	DDN-0432-0092	Describes car monitoring network from the CDT's perspective. This document is the mirror of all other ICDs.
Wayside Data Transfer ICD	DDN-0432-0093	
CCTV Car Monitoring Network ICD	DDN-0432-0097	

5 Allocation of Technical Specification Requirements

See section 2.7.

6 System/Subsystem Definitions

6.1 CDT Hardware

CDT functionality is achieved through a modular design.

The CDT is comprised of a number of hardware modules installed in a chassis and connected through a backplane. This design allows the system to achieve a high level of flexibility while meeting the required reliability, maintainability and life-cycle cost goals.

Drawing DBD-MS10-1000 *Modular Block Diagram* shows the modular structure of the CDT and the interconnection of its modules

The key features of the modular structure are described in the following sections.

6.1.1 CDT Power Distribution

Galvanically isolated, regulated power for the CDT modules is distributed along the backplane in addition to a filtered and protected connection to LVPS. The power supply connections to the backplane in the CDT are provided from the display module.

6.1.2 CDT Inter-module Communications

Inter-module communication in the CDT is implemented using a CAN bus network routed through the backplane.

6.1.3 CDT Microcontroller Core

The CDT hardware architecture includes a common C166/C167 microcontroller core used in the hardware modules. The 16-bit microcontroller is designed specifically for the automotive industry, with multiple suppliers and variants available. The CDT modules use the ST10F276 variant with the following features and on-chip peripherals:

- 16 Mbytes linear address space
- 40 MHz, or higher, clock speed
- Temperature range –40 to +125 °C
- 68 kB on-chip RAM
- 832 kB on-chip Flash ROM
- 256 kB off-chip RAM
- Dual CAN bus interfaces
- 5 external chip selects
- 8 channel Peripheral Event Controller (similar to DMA)
- 111 multi-function parallel I/O lines
- 32 Capture/Compare Units (provide hardware support for parallel port I/O timing)
- 5 timers
- 16 channel 10-bit A/D converter. (Note that these channels are only used for internal monitoring.)
- 4 channel PWM output
- Watchdog timer

In addition, each microcontroller has a minimum of 128 kB of off-chip RAM accessed through the address/data bus and 8 kB of Non-Volatile RAM (NVR) accessed through the SPI bus.

6.1.4 CDT Module Description

The modules used in the CDT are outlined in the table below and described in detail in following subsections.

Table 7: CDT Module Description

MODULE TYPE	Q'TY	MODULE DESCRIPTION
CDT Control Module (CCM)	1	The CDT Control Module (CCM) includes the power supplies for the CDT, the CDT control processor, the data logging memory and MDS Car Monitoring Network interface
Video LED Module (VLM)	1	The Video LED Module (VLM) includes the display, touchscreen, Fault LED panel and PTU port. The EMI / EMC isolation circuitry for the LVPS input, Car Network and PTU port are also located on this module.
Input/Output Module (IOM)	2	The Input/Output Module (IOM) provides vehicle input and output connections to the CDT using the vehicle wiring harness.

The combination of CCM and VLM forms a single composite entity sometimes referred to as the "Display Module". This term is used in the context of functions that are implemented through combinations of hardware features of the two sub-modules and software running on the CCM.

6.1.4.1 CDT Control Module

The CDT Control Module (CCM) includes the power supplies for the CDT, the CDT control processor, data logging memory and MDS Car Monitoring Network interface.

The power supply provides isolated, regulated power to the display module and to the other modules in the rack via the backplane. The supply operates over the vehicle LVPS input range of +24 to +48 VDC, using a 37.5 VDC nominal source. The input stages of the power supply provide Electromagnetic Interference / Electromagnetic Compatibility (EMI/EMC) filtering and protection against over-voltage and reverse-voltage.

Two processors are located on the module: the CDT Control Processor (CCP) and the Neuron Interface Processor (NIP).

The CCP is based on the CDT microcontroller core described in section 6.1.3.

The NIP is an Echelon LonWorks compatible device that provides the interface to the MDS Car Monitoring Network.

The CDT logging memory is located on the CCM and is managed by the CDT control processor.

The following peripheral and device interfaces are controlled by, or accessed through, the CCP:

- MDS Car Monitoring Network. The NIP provides the gateway between the CCP and the other subsystems connected to the MDS Car Monitoring Network.
- CDT data logging memory. The data logging memory is an array of Flash memory devices interfaced to the CCP.
- The display and touchscreen interface. The CCP monitors the touchscreen for operator input and displays the requested information on the display. The physical display and touchscreen are located on the VLM.
- Controller Area Network Bus (CAN Bus). Provides inter-module communications between the CCM and the Input/Output (I/O) modules
- CDT Status Monitoring. The CDT modules implement self test and diagnostic functionality. The module status reports associated with this functionality are relayed to the CDT Control Processor for processing and logging.

6.1.4.2 Video LED Module

The Video LED Module (VLM) includes the display, touchscreen, Fault LED panel, car network interface, LVPS input and PTU port isolation circuitry. The EMI / EMC isolation circuitry for the LVPS input, car network and PTU port are located on this module.

Four groups of LEDs on the front of the module indicate the health and power supply status of the module, the display status and power, the car network status and the PTU status.

The VLM provides the CDT PTU port, with the following features:

- Galvanically isolated, 115Kbaud, RS-232 port connected to a serial port on the CDT Control Processor.
- MDS Car Monitoring Network. Direct connection to the signal provided to the module through its vehicle interface connector.

The module's BTE interface consists of the following features.

- BTE connection signal. Used to determine whether the CDT is connected to the BTE. The signal is read by the CCP on the CCM.

The VLM also provides the location input used to determine in which car of a married pair the CDT is installed.

6.1.4.3 Input / Output Module

The Input/Output Module (IOM) provides a vehicle interface to the CDT via the vehicle wiring harness.

The IOM includes an I/O Processor (IOP), which manages the input acquisition and fault trainline output signals. The IOP is based on the CDT microcontroller core described in section 6.1.3.

The IOM supports the following interfaces:

- Type 1 inputs. Type 1 inputs are configured as isolated groups with 8 inputs sharing a common return. The inputs are configured to interpret any voltage less than 8 volts as a logic low and any voltage greater than 16 volts as a logic high. A contact wetting current of ~15 mA is drawn through each input on a periodic basis. The periodic nature of the current draw reduces power dissipation within the CDT. The sampling period and rate are under software control.
- Type 2 inputs. Type 2 inputs are individually isolated, inputs that draw ~15 mA each on a continuous basis.
- Fault trainline outputs. The fault trainline outputs are HEXFET-based solid state switches configured as a set of Form A, Normally Open contacts. The output state and current flow through the output is monitored and the maximum current is limited to ~1.25 Amp.
- CAN Bus. The IOP communicates with the other modules in the CDT via the backplane CAN Bus network.

The vehicle interface connections are current-limited and are protected against transients, over-voltage, under-voltage and reverse-voltage. All inputs and outputs are galvanically isolated from the IOP and from each other, either individually or as groups.

Self-diagnostics are periodically performed at the module level.

6.2 FDP Hardware

6.2.1 FDP Hardware Description

The FDP is mounted in a protected enclosure with a front bezel plate. A flexible polyester overlay is installed in the bezel plate. The front panel graphics are printed on the overlay. The fault indicating LEDs are visible through translucent windows in the overlay. The General Fault Reset push button and LED test push button are implemented using membrane switches embedded in the overlay.

The FDP electronic circuits are divided between two printed circuit boards. One printed circuit board, referred to as the Fault LED Module, is mounted directly behind the overlay. The LEDs are mounted on this module. This same module and overlay are used to provide the fault LED display on the CDT Display Module.

The Fault LED Module is connected to a second printed circuit board that contains the fault trainline interface circuitry and the fault trainline interface connector. The modules connect to each other through a transition connector.

FDP functions are implemented entirely in hardware; it does not contain a processor.

6.3 CDT Software

The MDS software consists of a set of software applications that run on the microprocessors located in the CDT modules. There is no software in the FDP.

6.3.1 Software Overview

The software in the CDT is distributed across four processors:

- The CDT Control Processor (CCP) located on the display module.
- The Neuron Interface Processor (NIP) located on the display module.
- An I/O Processor (IOP) located on each IOM.

The interfaces between the four processors and the other major internal and external entities are shown in Figure 7.

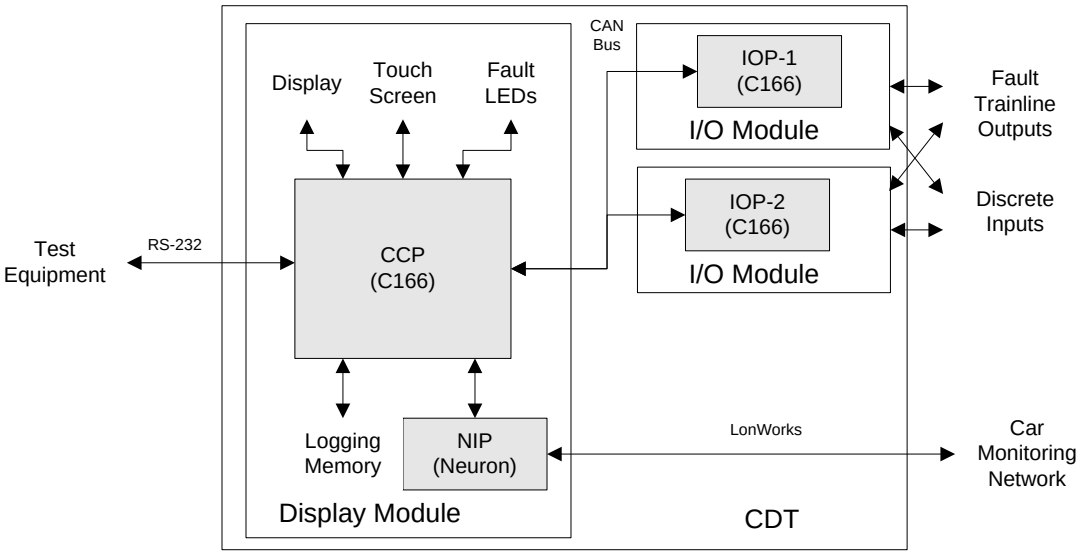

Figure 7: CDT Processor Interfaces

6.3.2 CCP Software

The CCP is the main controller for the CDT. It is based on the C166 microcontroller core described in section 6.1.3 and uses the RTX-166 operating system. It provides all of the software functions for the display module except for those assigned to the NIP described below. The CCP has the following interfaces:

- NIP
  Messages are exchanged via an 8-bit parallel bus.
- IOP
  Data is exchanged with each IOP via the CDT backplane CAN bus. The CCP software uses the ST276built-in CAN peripheral.

- Logging Memory
  Flash memory for logging is presented on the ST276address/data bus. The CCP reads, writes and erases flash data according to the details of the flash device used.
- Display
  The video image on the display is controlled through a video controller that provides pixel-based access. Software control is also provided to adjust display brightness.
- Touch screen
  Operator touch screen presses are monitored through the ST276built-in SPI interface. The touch screen interface provides the software with X-Y coordinates and an interrupt to signal each screen press.
- Fault LEDs
  Fault LEDs are controlled through built-in parallel I/O pins on the ST276microcontroller.
- Test Equipment
  The interface with the PTU is provided by an RS-232 serial port. A binary message protocol is used on this port. The BTE also uses this port for equipment diagnostics.
- Non-Volatile RAM
  Non-Volatile RAM (NVR) is connected to the ST276 SPI bus. The CCP software communicates with the NVR without interference with the touch screen interface, which is also connected to the SPI bus.

Not shown in the above figure is a low-level RS-232 interface that is used for engineering development and factory provisioning. This low-level interface is not accessible from the outside of the CDT.

The main functions of the CCP are:

- Provide a touch screen video display interface for the maintenance operator. Video data is displayed as a series of text-based menus and data displays. User entry is performed using a set of “soft” keys presented on the display.
- Shut down the display and backlight when inactive and when the temperature is out-of-bounds.
- Monitor real-time data received from the IOP discrete inputs and the MDS car monitoring network.
- Generate an internal set of real-time data based on self-test status and other operational parameters.
- Provide configurable “equation” processing that calculates boolean equation results based on logical combinations of other real-time data values. Equation status values act as another set of real-time data.
- Log real-time data from all sources to logging memory. Automatically overwrite older data when memory becomes full.
- Provide display functions to view real-time and logged data.
- Control the output states of the fault trainlines via the IOP. Fault trainline output states can be based on any real time status value, including equation results.
- Set the fault LED states to match the state of the fault trainline outputs.
- Receive configuration settings from the PTU. Configuration information includes definition labels for all real-time data, equation definitions, fault trainline outputs and LED assignments, and wayside data definitions.
- Receive timestamp, GPS coordinate information and Car number from the communication system via the MDS car monitoring network and NIP. Update internal real-time clock used for logging based on timestamp.

- Receive a software image from the PTU for the CCP and reprogram the CCP program flash with the received image.
- Receive a software image from the PTU for the IOP and transfer the software image to the IOP via CAN.
- Receive a software image from the PTU for MDS car monitoring network subsystem and transfer the software image to the subsystem via the NIP and MDS car monitoring network.

Note: The NIP image is not re-programmable via the CCP. Neuron limitations require that reprogramming of the NIP is done via the LonWorks network.

- Retrieve version and build date information for all software images, including CCP, IOP and all subsystems. Present that information on the display screen and send it to the PTU.
- Download recorded data from other subsystems and transfer to the PTU. Supports propulsion, braking and spin/slide systems as per the Technical Specification. Downloads from other subsystems are optionally supported.
- Transfer fault logs to the COMM system via the NIP and MDS car monitoring network for transfer to wayside.
- Monitor the power supply outputs for erroneous behaviour and shutdown the power supply if a fault is detected.
- Perform Built-In Self-Test (BIST) diagnostics including Power-On Self-Tests (POST) and continuous self-test operations.
- Control a front-panel “Healthy” LED that indicates when the CCP is operating properly or when self tests have detected a fault or error.
- Provide mutual exclusion mechanisms that suspend access to the flash by the other functions while one function is writing or erasing the flash.
- Monitor the BTE connection signal that indicates whether the CDT is connected to the BTE. When connected to the BTE, operate in BTE-mode to enable special diagnostic and troubleshooting functions not provided for on-train operation. When the BTE connected signal is enabled, the CDT configuration is overridden by a default configuration allowing the BTE to work the same regardless of the CDT configuration.

Note: The CCP is not involved in the password protection features associated with software update. Password protection is accomplished through user login to the PTU computer that grants those operations only to select users.

6.3.3 NIP Software

The MDS Car Monitoring Network interface is implemented with an Echelon LonWorks microcontroller (Neuron Interface Processor, NIP) interfaced to the CDT Control Processor (CCP).

The CCP manages low-level communications with the NIP, and processes MDS Car Monitoring Network messages. The CCP also provides control and interface functions to the NIP including: local communication with the NIP software, monitoring and control of the reset and service pin signals and Neuron status monitoring.

6.3.4 IOP Software

The IOM includes an I/O Processor (IOP), which manages the input acquisition and output control signals. The IOP is based on the C166 microcontroller core described in section 6.1.3 and uses the RTX-166 operating system.

The IOP has the following interfaces:

- CCP:
  Data is exchanged with the CCP via the CDT backplane CAN bus. The IOP software uses the C166 built-in CAN peripheral. Note: There is no data exchange between the two IOMs.

- Discrete inputs:
  Inputs are configured as banks of 8 type 1 inputs and a set of separate type 2 inputs. Input state signals and fault status signals are provided by the hardware to the IOP software. The inputs are monitored through a combination of built-in C166 parallel inputs and serial shift-register circuitry. Software also controls a signal that turns on and off the wetting current load for all type 1 inputs. This ensures a portion of the samples occur when wetting current is activated. Pulsing the wetting current also reduce heat generation in the IOM.
- Fault trainline outputs:
  Outputs are individually controllable by software through built-in C166 parallel outputs. The software also monitors internal feedback circuitry that indicates output state and current draw. Feedback signals are monitored through a combination of built-in C166 parallel inputs, serial shift-register circuitry and other interface circuitry.

The main functions of the IOP are:

- Monitor external discrete input signals and internal feedback signals and send real-time data to the CCP via the CAN bus.
- Generate an internal set of real-time data based on self-test status and other operational parameters and send real-time data to the CCP via the CAN bus.
- Receive output control data from the CCP to set the states of the fault trainline outputs.
- Receive a software image from the CCP and reprogram the IOP program flash with the received image.
- Report version and build date information for its software to the CCP.
- Perform Built-In Self-Test (BIST) diagnostics including Power-On Self-Tests (POST) and continuous self-test operations.
- Control a front-panel “Healthy” LED that indicates when the IOP is operating properly or when self tests have detected a fault or error.

6.3.5 Inter-processor Communications

The CDT internally uses a “light-weight” messaging protocol to communicate between QTC software on each of the modules. This connectionless protocol, called the MDS Network (MDN), provides message routing over the CAN bus link layer. A link layer interface over the serial port is used to communicate with PTU and BTE software. An additional link layer interface to CAN bus is used in a BTE test environment.

The interface between CCP and NIP SCIs is via an 8-bit parallel bus using the standard Echelon MIP protocol.

6.3.6 Software Configuration Item Table

All SCIs are classified as either commercial off the shelf (COTS), or custom developed (Application Software). Application software falls into one or more of the following categories:

(a) Newly Developed:
New software developed for this project

(b) Ported:
Software ported from previous project and modified as required.

All ported software is reviewed and tested in the same manner as newly developed software. Application SCIs can be a combination of Newly Developed and Ported.

Table 8: Software Configuration Items

SCI NAME	CATEGORY	REQUIREMENTS AND DETAILED DESIGN REFERENCE	MODULE	HOST PROCESSOR TYPE	HOST STORAGE COMPONENT TYPE	DOWNLOAD METHOD
NIP	Application Software (Ported)	NIP SRS (DDN-NP01-0010) NIP SDD (DDN-NP01-0011)	Display Module	Neuron	EEPROM on Neuron chip	Loaded via LonWorks network
Neuron firmware	COTS	Section 6.3.3	Display Module	Neuron	ROM	PROM programmer Loadable only in a factory environment
CCP	Application Software (Ported)	CCP SRS (DDN-0432-0120) CCP SDD (DDN-0432-0121)	Display Module	C166	Flash EPROM	PTU port file transfer.
IOP	Application Software (Ported)	IOP SRS (DDN-0432-0126) IOP SDD (DDN-0432-0127)	IOM	C166	Flash EPROM	PTU port file transfer.
ST276-Boot	Application Software (Ported)	ST276-Boot SRS (DDN-BT02-0010) ST276-Boot SDD(DDN-BT02-0011)	Display Module, IOM	C166	Flash EPROM	Load through microcontroller serial port using a COTS utility. Loadable only in a workshop environment. Supports update of CCP and IOP via PTU port.
PTU	Application Software (Ported)	PTU SRS (DDN-0432-0130) PTU SDD (DDN-0432-0131)	Portable Test Unit (laptop computer)	Windows	Disk File	Loaded onto PTU file system using installation CD.

6.3.7 Application Software Configuration Items

Table 9 outlines the high-level functions of each of the Application Software SCIs for which Quester Tangent is responsible. Further details may be found in the respective SRS and SDD documents as listed in Table 8.

Table 9: Quester Tangent Application Software SCI Functions

SCI Name	Development/ Maintenance Environment	Functional Description
NIP	Windows Neuron C Nodebuilder 3.0	Application running on the Neuron Interface Processor (NIP) on the Display Module. The NIP SCI is built on top of the Echelon Microprocessor Interface Program (MIP) software library. The SCI allows for explicit addressing of network packets. The SCI relies on the CCP for processing of network variable selectors.
CCP	Windows ANSI C Keil µVision	Embedded software that runs on the CDT Control Processor on the Display Module. The purpose of the CCP SCI is as follows: • Manages real-time and logged data. • Coordinate communications with the IOP(s) via the CAN bus. This includes getting the discrete input states and setting the fault trainline states. • Coordinate communications with the LonWorks network via the Neuron Interface Processor (NIP). • Manage the touch screen display functions. • Control the Fault LED Display (FLD) incorporated into the CDT. • Monitor and control various power supply functions. • Handle local I/O, such as board ID, slot ID, and on-board temperature status. • Perform hardware tests for self-test and BTE operation.
IOP	Windows ANSI C Keil µVision	Embedded software that runs on the I/O Processor on the I/O Module. The purpose of the IOP SCI is as follows: • Sample discrete inputs and report readings to the CCP software on the Display Module. Readings updated once per 100 ms. • Control fault trainline outputs based on commands received from the CCP software. • Handle local I/O, such as on-board temperature. • Perform hardware tests for self-test and BTE operation. Report faults to the CCP. • Set control outputs to default state on power up. • Set control outputs to default state unless refreshed regularly by CCP software. This timeout interval is configurable. • Monitor voltage and current feedbacks from control outputs, used for fault diagnosis. Set control outputs to default state on over-current detection. • Monitor control output temperature. Set control outputs to default state on over-temperature.

SCI Name	Development/ Maintenance Environment	Functional Description
ST276-Boot	Windows ANSI C Keil µVision	Bootstrap loader for ST276microcontrollers. The purpose of the ST276-Boot SCI is as follows: • Provide the start-up code for all ST276microcontrollers. • Perform low-level hardware initialization. • Perform Power-On Self-Tests (POST) to verify that hardware is sufficiently healthy to run the application SCI. • Enable and test the watchdog timer. • Check application image CRC before running. • Check that the application software is compatible with the hardware before running the application. • Perform operations associated with microcontroller application image updates. • Provide the static interrupt jump table located at address zero.
PTU	Windows ANSI C/C++ Visual C++ 6.0	Portable Test Unit software for MDS. The purpose of the PTU SCI is as follows: • Download and save logged data from the CDT • Display real-time data from the CDT • Configure the CDT • Update software on the CDT and on other MDS car monitoring network subsystems • Retrieve log files from other MDS car monitoring network subsystems • Provide any functions required for on-train testing that are not already present in the CDT itself.

6.3.8 COTS Software Configuration Items

This section describes the requirements of COTS SCIs, and provides references to COTS SCI providers' documentation that states the requirements are provided.

6.3.8.1 Neuron Firmware

The Neuron Firmware SCI provides low-level access to the LonWorks network, drives Neuron processor I/O pins, and provides basic operating system features such as timers and a scheduler. The firmware image is the most recently released version from Echelon for the Neuron 3120E4 processor (currently version 13)

The firmware image is pre-loaded by the Neuron chip supplier. Before installing the programmed device onto the Display Module during manufacturing, its communication parameter settings must be modified to be compatible with those required for the CDS, namely transceiver type (TP/FT-10) operating at 78 Kbps. This step is performed using a specialized PROM programmer.

The Neuron Firmware image may be re-created as a by-product of building the NIP SCI image. It is built from firmware library code that is a component of Echelon's NodeBuilder development tool (Echelon part number 10020), together with device hardware configuration information. This information is defined by selecting the particular model of Neuron processor, clock speed (10 MHz) and transceiver type (TP/FT-10).

The Neuron Firmware can be updated only in a workshop environment by removing the Neuron chip from the board, re-programming it with a PROM programmer and reinstalling. In practice, it is difficult to remove this type of Neuron chip without damaging it, so a replacement chip is generally required.

Note:	Unlike the Neuron Firmware SCI (system image), the NIP SCI (application image) can be updated via the LonWorks Network without chip removal.

6.3.9 Other SCIs

None

6.3.10 Software Safety

The CDS is assessed as non safety-related as documented in section 8 of the Safety Analysis Report (DRP-0432-0005). A Software Safety Integrity Level (SIL) of 0 has been assigned based on assessment of risk using the techniques and definitions outlined in EN 50128. As a consequence, functional requirements from the TS and PTS that apply to safety-related software are not applicable to the software running on the CDT, PTU or BTE.

6.4 System Functions

This section describes the functions of the MDS including the CDT, FDP and PTU.

6.4.1 CDT Operating Modes

The CDT has a number of operating modes that depend on its health status and operations performed. The main modes of operation are:

Invalid:	The CCP application software has not been loaded into memory or has an invalid CRC. The ST276-Boot SCI will not run the application.
Initializing:	The CDT enters this mode on power up or reset and performs initialization functions including Power-On Self Test (POST) operations. If a POST failure prohibits software execution, a software exception is generated.
Normal:	The CDT performs all of its normal operation for data collection, logging, display, etc. The Healthy LED is ON.
Unhealthy:	One or more internal self-diagnostics have detected a fault but the severity does not require the software to halt. The CDT performs most of its normal operation for data collection, logging, display, etc. Some functions may be degraded depending on the fault. The Healthy LED is OFF.
Unconfigured:	The configuration database has not been loaded or is invalid. A subset of internal status data is logged to help with debugging. No data from car monitoring subsystems is recorded or logged. The Healthy LED is OFF.
Halted:	Self-diagnostics have detected a severe fault or software error. All functions are suspended. Software runs in a tight loop refreshing the watchdog timer to prevent a reset. Healthy LED is OFF.

In addition, the CDT temporarily enters a degraded mode of operation when configuration or software updates are being received from the PTU. During these periods, no data from car monitoring subsystems is recorded or logged.

The CDT displays the current operating mode on the video display main screen. The CDT also prints extended information regarding the current operating mode to the Debug Serial port on the Display Module.

6.4.2 Power Management

The LVPS power supply for the CDT is part of the Display Module. The LVPS Power supply regulates the external +24 to +48 VDC LVPS to the local voltages necessary to operate the CDT.

The CDT hardware provides low-voltage shutdown circuitry that turns off the local power supplies if the LVPS voltage drops significantly below 24 VDC. In addition, the CCP software on the display module monitors the current and voltage outputs from the power supply as well as the temperature of the power supply. The software turns off the local power supplies in the event of an excessive output current, output voltage out of range or high operating temperature.

6.4.3 CDT Display Functions

6.4.3.1 General

The CDT provides a user interface for maintainers and engineers to access real-time and logged data through a touch screen video display. The display has a 640 × 480 pixel resolution with a minimum 8 bits-per-pixel color depth. The display is illuminated by a backlight with variable brightness. Information is displayed mostly as text with a maximum 80 characters wide by 40 high. Foreground and background colors are set to emphasize status and improve contrast. Color is never used as the only indicator of information.

Information on the display is arranged as a hierarchical set of screens. The main screen is displayed on power up or reset after an initialization splash screen and all other screens are reached from it. “Soft” pushbuttons displayed on the screen are used for navigation between screens, to scroll data and to modify input values. When data entry is required, “soft” pushbuttons are provided to select the item to enter from a list or keypad buttons to set the value.

When the BTE connected signal is activated, the initialization splash screen includes a “cancel” soft pushbutton. This allows the user to stop the log scanning process and access the main screen faster. Note that doing so may slow down log access significantly until the CDT is restarted.

While the user presses a soft pushbutton, it changes visual appearance and the associated function is performed. For some pushbuttons, such as those used for scrolling, the button function automatically repeats when the user holds the button for an extended period.

A calibration feature is provided to realign the touch screen coordinates with the display coordinates if they become offset due to drift over time or temperature.

A “screen saver” feature turns off the display when there has been no touch screen activity for 15 minutes. The display returns to the previous displayed screen when touched unless it has been in screen saver mode for more than 15 minutes. After 15 minutes in screen saver mode touching the screen causes the main menu to be displayed.

The CDT software monitors the temperature of the display and shuts down both the display and backlight if the temperature is outside the screen’s operating range. The screen’s operating temperature range is -10°C (14°F) to +70°C (158°F). The temperature status is indicated by a front panel LED that is illuminated green when the temperature is in range and amber when it is not. Note: the CDT is still operational below -10°C (14°F).

The CDT software monitors the health of the display and display backlight and shuts down the display and backlight if either is unhealthy, e.g. the backlight is burned out. The display status is indicated by a front panel LED that is illuminated green when the display and backlight are healthy.

6.4.3.2 Main Screen

The main screen has the following features:

- Navigation buttons to other screens
- Backlight brightness control
- Car Number and RTC time displayed
- Configuration Database version number
- CDT Operating Mode

6.4.3.3 Real-Time Data Screens

The real-time data screens have the following features:

- Display status, parameter and equation data from RTDB
- Include item name, subsystem, identifier, description, fault#, value, severity, stale state, count
- Scrollable display automatically updates as data values change
- Data can be filtered by subsystem, fault # and severity

- Help feature available to get more detailed info on each data item
- Special “Custom” data screen available to display a configurable subset of data items
- Special “Active Fault” data screen to show only active status and equation data that have been assigned a fault number.
- Display one item per row.
- Only display items with their Configuration Dabase “Display” attribute set to ON.
- Color used to highlight fault status and staleness.

6.4.3.4 Logged Data Screens

The logged data screens have the following features:

- Displays status, parameter and equation data from CDT Log
- Data displayed in chronological order
- Includes item name, identifier, fault#(for status and equation), subsystem name, value, severity, logged time and count (for status and equation)
- Scrollable display automatically updates as logged data added
- Search function can find data beginning at specified date
- Data can be filtered by subsystem, fault # and severity
- Help feature available to get more detailed info on each data item
- Display of vehicle snapshot data logged at the time of faults can be turned on or off
- Primary or alternate logging can be selected through CDT

6.4.3.5 Other Screens

Other CDT screens provide the following features:

- Software version information screen. Soft pushbuttons used to initiate query and display information as described in section 6.4.19 in a scrollable list.
- Calibration screen (initiated from the PTU) allows the operator to re-align the touch-screen coordinates with the video display coordinates.

6.4.4 Discrete Inputs

The CDT reads the state of discrete inputs using Type 1 and Type 2 binary inputs.

Discrete inputs support sampling at a rate of 200 samples per second, i.e. 5 ms intervals.

All inputs are low pass filtered and galvanically isolated from the control logic. Additional configurable debounce filtering is provided in software.

The circuitry is configured such that an input that is not connected or is open-circuit is reported as a 0.

Refer to the Vehicle Electrical and Connector ICD (DDN-0432-0081) for more details.

6.4.4.1 Type 1 Inputs

Type 1 inputs are configured as isolated groups of 8 inputs sharing a common return. The IOP software on the IOM uses serial shift registers to read the states of the inputs. Inverted feedback on the shift registers allows the software to determine if there is any fault with the input sampling circuitry or shift registers.

Contact wetting current is drawn through each input on a periodic basis. The rate and duty cycle of the wetting current draw is controlled by software. Wetting current is drawn for a period of 100 ms every second for a duty cycle of 10% and is synchronized with the input sampling.

The IOP monitors the temperature of the wetting current load resistors and turn off the wetting current sampling if their temperature exceeds their maximum specified operating temperature.

IOP software on the IOM reports input states and feedback status to the CCP software on the Display Module at least 10 times per second.

Refer to the Vehicle Electrical and Connector ICD (DDN-0432-0081) for more details.

6.4.4.2 Type 2 Inputs

Type 2 inputs are discrete inputs that are galvanically isolated both from the control logic and each other.

These inputs each draw wetting current on a continuous basis thus wetting current sampling is not required.

IOP software on the IOM reports input states to the CCP software on the Display Module at least 10 times per second.

Refer to the Vehicle Electrical and Connector ICD (DDN-0432-0081) for more details.

6.4.5 Fault Trainline Control Outputs

The CCP software sets the state of the control outputs by sending commands to the IOP software on the IOM. The IOP commands the output hardware to the commanded state. The IOP reverts the control outputs to their default state if the CCP application does not refresh its command periodically, within an interval configured by the CCP.

The IOP monitors signals from hardware that provide feedback of the voltage across the output and the current flowing through it. The IOP also monitors the temperature of the output circuitry. These statuses are reported to the CCP software at least 10 times per second. Software calibration of the current feedback hardware is performed at the factory and calibration coefficients are stored in NVR on the IOM. Calibrated current feedback measurements are accurate to within ±50 mA.

The IOP reverts each individual control output to its default state if the current feedback value indicates the output circuitry is in current limiting. The IOP reverts all control outputs to their default state (OFF) if the temperature of the output circuitry is excessively high.

IOP software on the IOM reports control output states, feedback status and errors to the CCP software on the Display Module at least 10 times per second.

Refer to the Vehicle Electrical and Connector ICD (DDN-0432-0081) for more details.

6.4.6 CDT Real Time Database (RTDB) Functions

The CDT maintains a Real-Time Database (RTDB) that records the most recent values for each data item collected from the MDS car monitoring network subsystems, the CDT discrete inputs, and internal monitoring. The RTDB is managed by the CCP SCI running on the Display Module C166 microcontroller.

The RTDB contains three types of data.

Status: The boolean data from the bit vectors collected from each of the MDS car monitoring subsystems. Internal status values from the CDT and discrete input data collected via the IOMs are also reported as status data.

Parameter: The numeric data collected from each of the MDS car monitoring subsystems. Internal numeric values from the CDT are also reported as parameters.

Equation: The boolean results of the equation processing. See section 6.4.8 for equation details.

The RTDB is maintained in external RAM that is directly addressable from the C166. The RTDB records the most recent values for each of the data items along with meta-data necessary to support the processing of the data.

Status and Equation data are displayed as “Set” or “Clr” to indicate if they are active or not. The raw value of each Parameter is represented internally as a 2-byte number. For display, parameters are converted to floating point numbers; the conversion attributes are configurable for each parameter.

6.4.6.1 RTDB Subsystems

The RTDB records status, parameter and equation data for the network subsystems as defined by the individual subsystems’ Car Monitoring Network ICDs (DDN-0432-0085 to DDN-0432-0088, DDN-0432-0091 DDN-0432-0093and DDN-0432-0097).

6.4.6.2 Status Processing

All status data, including data generated from MDS car monitoring network,, discrete inputs, and internal monitoring are subject to processing. Two processing steps are applied:

Inversion:

Each status data item can be configured as “inverted”. In this case the value received is inverted prior to all other operations.

Persistence:

Persistence processing prevents rapidly changing status values from being logged every time they change. Each status data item can have a configured “persistence period”. When the persistence period is set to non-zero, a status value is recorded as “set” when it first transitions from 0 to 1 but becomes “clear” only after the persistence period has expired. The number of times a status transitions from 1 to 0 during the persistence period is counted and that count is recorded in the CDT log and displayed on the CDT screen.

6.4.6.3 Parameter Conversion

Raw parameter values are stored in the RTDB and CDT Log but are converted to floating point values for display on the CDT. Parameter values are also converted to floating values for use in equations.

Note:	The parameter conversion is not performed for calibration but simply to convert the parameters to values that represent real-world units such as mph or volts.

Scale and offset conversion coefficients are configurable for each individual parameter data item.

6.4.6.4 Stale Data

Data is identified as stale when it has not been updated more recently than the “stale data period”. The stale data period is a configurable attribute that applies to all data items. Status and Parameter data becomes stale when the item has not been updated by the source network subsystem within the stale data period. Equation data becomes stale whenever any of the status or parameter data used in the equation become stale.

Data items are indicated as stale on the CDT real-time data screens by changing their color and adding an “Stl” indicator to the data. The most common reason for stale data would be a loss of MDS car monitoring network communications. In this case, all data from one or more subsystems would become stale.

6.4.6.5 Active Faults

Status and equation data are identified as active faults when they are set and they have been assigned a fault number in the configuration.

A display screen is provided on the CDT that displays only the active faults from the RTDB.

6.4.7 CDT Logging Functions

6.4.7.1 General

The CDT Log is used to record a configurable subset of the data managed by the RTDB. The CDT Log is managed by the CCP SCI running on the Display Module C166 microcontroller.

The CDT records the status, parameter and equation data from the RTDB as described in section 6.4.4. For statuses the processed boolean value is logged, for parameters the raw numeric value is logged and for equations the boolean equation result is logged.

6.4.7.2 Log Format

The CDT Log is stored in flash memory on the CDT. A portion of this flash is also used to store the configuration information and is unavailable for logging. The size of the logging flash memory is 1.6 Mbyte.

The log is maintained as a "cyclic buffer" so that when the log memory becomes full the new data overwrites the older data at the beginning of the log. Pointers are maintained to keep track of the first and last entries in the log. No loss of logged data occurs as a result of the sharing of the Flash ROM with the other functions except that logging may be suspended while updated Configuration Database or software is being received from the PTU and stored in Flash ROM.

Each entry in the log contains the following items:

1. Subsystem
   The subsystem from which the data was received or the CDT itself.

Type
: The data type: status, parameter or equation.

Trigger
: This item is only used for status and equation entries, flag indicating if the item triggered the logging of a vehicle snapshot or not.

Vehicle Snapshot
: Flag indicating if the data was logged as part of a vehicle snapshot or not.

Index
: The index of the data item within its type and subsystem.

Value
: For status and equation entries this is a 0 or 1 to indicate state. For parameters this is the raw 2-byte value.

Time
: The time that the entry was logged.

Count
: This item is only used for status entries. It records the count of 0 to 1 transitions during the persistence period. See section 6.4.6.2 for details.

The size of each log record is 8 bytes.

6.4.7.3 Logging Events

Each data item can be configured to be "logged" or "not logged".

When a data item is configured to be logged, the events that can trigger logging are as follows:

- Status
  Status values are logged whenever the value for the status (after inversion and persistence processing) changes from 0 to 1 or 1 to 0. The Count is logged with each status value. When the 0 to 1 transition is logged, the Count is always set to 0. When the 1 to 0 transition is logged, however, the Count may be 1 or greater if the Persistence is non-zero. In that case, the Count will indicate the number of times the raw status value toggled from 0 to 1 during the persistence period.
- Parameter
  Parameter values are logged if the time since last logged exceeds a configurable "log interval" or if the absolute value since last logged exceeds a configurable "log change". The log interval and log change attributes are separately configurable for each parameter.
- Equations
  Like status values, equations are logged whenever the equation result changes from 0 to 1 or 1 to 0. The equation count operates similarly to the status values count.

6.4.7.4 Log Initialization

At initialization, the software performs the following steps:

- Scan through the log and determine the start and end record indices.

- Check time, subsystem index and data type specified for each record and identify if these values are invalid for any records. Set an RTDB status bit if any invalid records are found.

6.4.7.5 Vehicle Snapshot Logging

In addition to the logging events described in the previous section, vehicle snapshot data values can be recorded when a fault (indicated by a status or equation) changes from 0 to 1. The set of status, parameter and equation items that are logged as vehicle snapshot information is configurable. The status and equation items that can trigger vehicle status logging are also configurable. The "minimum trigger period" is also configurable. Vehicle snapshot information is not logged more often than this period.

Data items that are logged as vehicle snapshot information are tagged in the log to identify them as such. When the logged data is displayed on the CDT, filter options are provided to allow the vehicle snapshot data to be displayed or hidden.

6.4.7.6 Primary and Alternate Logging

The configuration database includes two sets of attributes to control logging: "Primary" and "Alternate". The primary attributes are used by default on power up. The user can switch to the alternate attributes through the CDT display. The purpose of the alternate attributes is to be able to temporarily log data in a more intensive mode during on-train tests.

6.4.8 CDT Equation Processing

Equations are used to calculate boolean results from combinations of status and parameter values. Equations can also include constants for comparison with parameters. The equation results can then be displayed, logged, sent to wayside and used to set the fault trainlines. Equation functions are managed by the CCP SCI running on the Display Module C166 microcontroller. Equation results are updated once per second.

Comparison operators NEQ (does not equal), EQ (equals), < (less than), > (greater than), <= (less than or equal to), >= (greater than or equal to) apply to parameters only. Parameters or constants may only appear in pairs with another parameter or constant, separated by valid comparison operators.

Boolean operators (AND, OR) apply to statuses or the result of a parameter and/or constant comparison.

The operator NOT may be applied to statuses only.

Equations are evaluated according to the following precedence rules:

1. NOT statuses

Parameter and/or constant comparisons

AND operations

OR operations

For example:

- P1 AND P2 is invalid – parameters use comparison operators.
- P1 < 23.45 < P3 is invalid – while the operands are valid, parameters and/or constants can only be processed in pairs, i.e. rewrite as P1 < 23.45 AND 23.45 < P3
- S1 NEQ S2 is invalid – statuses are either active or inactive; they must be combined with Boolean operators
- P1 < 1.23 OR P3 > P4 AND S2 is valid – evaluated as (P1 < 1.23) OR ((P3 > P4) AND S2)
- S1 OR S2 AND S3 AND S4 is valid – evaluated as S1 OR ((S2 AND S3) AND S4)

Up to 80 separate equations can be defined in the CDT and each equation can have up to 10 operator/operand pairs.

The PTU performs checks on all equations before they are applied. If an invalid equation is configured, the PTU displays an error message, including the location of the invalid argument.

For display purposes, each equation can be associated with a specific subsystem, although equations can be created which use combinations of statuses and parameters from different subsystems as operands.

Persistence processing can be applied to equation data in the same manner as for status data described in section 6.4.6.2. Each equation has a configurable persistence period. If the period is non-zero then persistence processing is applied for that equation.

6.4.9 CDT Fault Trainline Functions

6.4.9.1 CDT Fault Trainline Control

Each fault trainline, including the general fault trainline, is controlled by a configurable subset of RTDB status and equation data items.

A fault trainline is activated when ANY of its associated data items are set and only deactivated when ALL of the associated data items are clear. When the CDT activates a fault trainline, it also turns on an associated LED on its local Fault LED Display (FLD).

The CDT deactivates its General Fault Trainline (GFT) control output whenever the General Fault Reset (GFR) trainline is asserted (when the Reset button is pressed on an external FDP). The CDT deactivates its General Fault Trainline (GFT) control output and also turns off the General Fault LED on the local FLD whenever the FLD Reset button is pressed. Whenever the CDT deactivates the GFT or turns off the General Fault LED in response to a reset event, it turns on the "GFR Cancellation" timer. When the GFR Cancellation timer expires and ANY associated status or equation item still indicates a fault condition, the GFT control output and General Fault LED are restored to their active state. The GFR Cancellation Period is a configurable attribute.

See Table 10 for a summary of the General Fault Trainline and General Fault LED logic.

Table 10 : General Fault Trainline and General Fault LED Logic

INPUT STATE	RESET EVENT	GENERAL FAULT TRAINLINE (GFT) CONTROL OUTPUT	GENERAL FAULT LED
ALL associated items Clear	N/A	Inactive	OFF
ANY associated items Set	None	Active	ON
ANY associated items Set	Reset pressed on cab FDP (GFR Trainline asserted)	Inactive	ON
ANY associated items Set	Reset button pressed on CDT's Fault LED Display	Inactive	OFF
ANY associated items Set	GFR Cancellation timer expires	Active	ON

Note: Section 2.5.1 describes how the CDT closes or opens its outputs to control the activation of each trainline.

6.4.9.2 GFT Wetting Current PWM Failure Detection

As described in section 2.5.3, the FDP in the lead cab draws a wetting current through each fault trainline. . To reduce the heat dissipation in the FDP the wetting current draw is turned off and on at a nominal 4 Hz rate with a duty cycle of 25%. If the circuitry that controls the switching action fails the heat dissipation in the FDP will increase, thus impacting its long term reliability.

The software on the CDT detects a failure of the wetting current control circuitry or the external active cab and coupler contacts that steer the current through the fault trainlines by monitoring the current draw on the GFT. The GFT is used because it is wired in a logic "NOT AND" circuit so that the current flows through the output. The other fault trainlines are wired in a logic "OR" where the wetting current bypasses the output.

Figure 8 shows the normal behaviour of the GFT. Application of the wetting current results in a drop in the GFT voltage, but not below the on/off detection threshold in the FDP or CDT. The GFT is asserted whenever any CDT opens its control output and the current drops to zero.

Figure 9 shows the behaviour when the wetting current circuit fails ON. The wetting current is applied continuously when the GFT is not asserted. Note that this does not affect the logic level of the GFT nor the state of the trainline as monitored by the FDP or CDT. The CDT software detects the fault by monitoring the GFT current. A fault is declared whenever the GFT current is continuously above 30 mA for more than 2 seconds. The CDT software reports the GFT PWM failure through a CDT status data item. Through configuration database options, this data item can be displayed, logged and used to activate the GFT and General Fault LED.

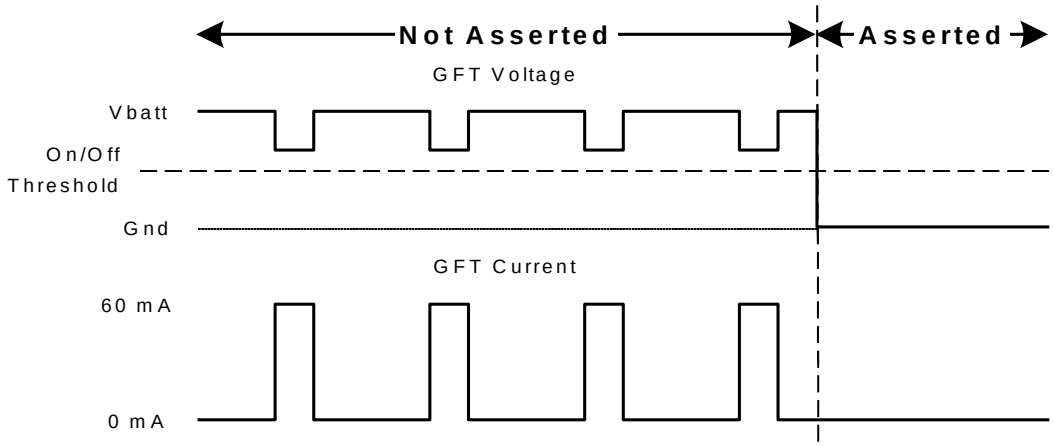

Figure 8 : GFT – Normal Operation

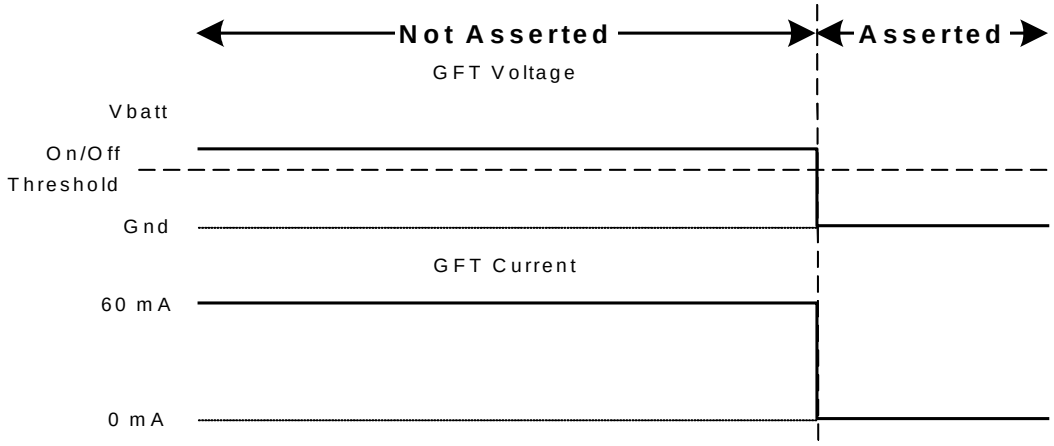

Figure 9 : GFT Operation with Wetting Current Control Circuitry Failure

6.4.10 CDT Configuration

6.4.10.1 CDT Configuration Database

The CDT configuration database is stored as a Comma-Separated Value (CSV) file on the PTU. The file layout is designed so that it can easily be viewed in a spreadsheet program such as Microsoft Excel™. The configuration is generated from a macro within a Microsoft Excel™ workbook containing the Diagnostic Data Dictionary (DDD). The information in the CDT configuration database is divided into a set of separate groups:

- File Identification
  Items used to identify the configuration file. Includes Version Number, Creation Date and Author.
- Statuses
  A list of all status data items. Each status is identified by subsystem and index and includes all associated attributes.
- Parameters
  A list of all parameter data items. Each parameter is identified by subsystem and index and includes all associated attributes.
- Equations
  A list of all defined equations. Each equation is identified by subsystem and index and includes all associated attributes.
- Min Trigger Period
  The minimum trigger period for vehicle snapshot logging.
- GFR Cancellation period
  The time period after which a General Fault Reset is cancelled and the states of the General Fault Trainline and General Fault LED are returned to normal.
- Stale Data Factor
  The time period, in multiples of update periods, after which status, parameter and equation data is declared stale.

6.4.10.2 The configuration is stored in flash memory on the CCM and is available for reading by other CCP functions.CDT Configuration Operations

The PTU and CDT support the following CDT Configuration database operations:

- Load the configuration database from a file on disk into the PTU software.
- Save the configuration from the PTU software to a file on disk.
- Send the configuration database to the CDT via the PTU serial port.
- Get the configuration database from the CDT via the PTU serial port.
- When configuration attributes are read from disk or downloaded from the CDT , the PTU software performs a number of “sanity” checks to verify that the data is formatted properly and none of the rules for individual values are violated. Configuration transfers between the PTU and CDT are verified with a CRC16 check. When the configuration database is sent to the CDT, the CDT records it in Flash ROM

The PTU software also uses a subset of the configuration database for its own operations, such as displaying the names of the data items.

6.4.11 CDT Wayside Data Management

There are two types of wayside data transfer:

1. Recent Faults
Transfer of all faults that occurred since the last wayside transfer (of either type). Designed to support wayside transfers at the Suburban Station.

2. Historical
Transfer of logged data from a requested start time. Supports wayside transfers in the yards.

Configuration database settings determine which data items are sent as recent faults and which are sent as historical data.

Both the Recent Faults and Historical wayside data transfers are performed by file transfer from the CDT to the COMM system. Details of the file transfer protocol for wayside data transfers are in the Communications Car Monitoring Network ICD (DDN-0432-0091). Details of the content and format of the data are in the Wayside Data Transfer ICD (DDN-0432-0093)..

6.4.12 CDT Car Monitoring Network Functions

Refer to the MDS Car Monitoring Network ICD (DDN-0432-0080) for general details of network operation and the CDT Car Monitoring Network ICD (DDN-0432-0092) for specific details of the CDT network interface.

6.4.13 Car Number

CDT receives the car number from the Communication system via the MDS car monitoring network. The Communication system sends the car number as one of its numeric parameters. The CCP software on the CDT performs the following car number functions:

- Displays the car number on the CDT display main screen.
- Stores the car number received from the Communication system in Non-Volatile RAM (NVR).
- On power up, uses the NVR car number until an update is received from the subsystem.
- Transmits the car number to other subsystem via the MDS car monitoring network as specified by the CDT configuration.

6.4.14 Self-test and Status Indication

6.4.14.1 Automatic Self Test

MDS hardware and software is designed to support self-diagnosis. The software performs self-tests during initialization, on a periodic basis, and in response to events.

Initialization self-tests include:

- RAM (write pattern then read back)
- Watchdog timer (verifies watchdog timer is working)
- CRC checks on software images
- Board ID (verifies application correctly matches board type and revision)
- CRC checks on log and configuration data stored in NVR and Flash ROM

Periodic and event driven self-tests include:

- Heartbeat (see section 6.4.14.3)
- Watchdog (watchdog reset occurs in response to execution errors)
- NVR and Flash ROM read-after-write
- Communications channel monitoring
- Hardware peripheral monitoring
- Power supply monitoring
- Temperature monitoring
- RTC monitoring including power loss

In addition, hardware on each module monitors power supply status and turns off power to the unit if a power supply fault is detected. This function operates independent of software. See section 6.4.2 for details.

These test functions operate automatically without operator intervention. Failures detected by software are reported in the RTDB and CDT log and can be indicated as a fault on the General Fault Trainline. LEDs on the front plate of each module indicate module health and power status.

6.4.14.2 Manual Self Test

The CDT software includes a number of self test functions that are executed on demand in order to support test and troubleshooting using the PTU or BTE. PTU functions are invoked through the PTU serial port. BTE functions are invoked through the debug serial ports on the IOM and Display module accessed internally on those cards.

- LED Test

- Display event log
- Clear event log
- Display input and output states
- Display health
- Display temperature log
- Clear temperature log
- Reset board
- Calculate % CPU Usage

6.4.14.3 Heartbeat Status

System self test includes an automatic “heartbeat” mechanism used to verify subsystem and module communications over the MDS internal network. The IOPs periodically send a heartbeat message to the CCP over the CAN bus. The CCP SCI monitors the arrival of IOP heartbeat messages as they are received. Timers are maintained that signal a timeout if a heartbeat message is lost. In addition the CCP continually monitors its parallel interface with the Neuron processor and detects and reports any link failures.

Heartbeat and Neuron link failures are reported in the MDS log and indicated as a MDS fault.

6.4.15 Module Extreme Temperature Logging

The CCP software on the Display Module and IOP software on the I/O Modules provide a feature to record the extreme board temperatures in Non-Volatile RAM (NVR). The software periodically monitors the module temperature using an on-board temperature sensor and records the following items:

- Maximum recorded temperature and time at which maximum was last encountered.
- Minimum recorded temperature and time at which maximum was last encountered.
- Number of occasions and seconds recorded at temperatures above +70°C and the time at which this limit was last exceeded.
- Number of occasions and seconds recorded at temperatures below –30°C and the time at which this limit was last exceeded.

The software provides the functions to reset and read the log and communicate it to the operator and BTE during manufacturing testing and troubleshooting.

6.4.16 Test Equipment Interface

The test equipment interface facilitates transfer of real-time data, logged data, configuration information, software images and other files between the CDT and the test equipment.

The CDT supports an RS-232 Portable Test Unit (PTU) port interfaced to the CDT Control Processor (CCP). The port is available on the front of the Display Module. This port facilitates on-train testing using the PTU laptop running PTU software and for workshop testing when connected to the BTE.

The Display Module and I/O Modules provide debug serial ports for their CCP and IOP processors. The debug serial ports are accessible internal to the unit. These serial ports provide access to low-level test commands used for manufacturing and test, and are also used for loading software in a workshop environment. All input, output and internal conditions can be interrogated through this port. An internal event log can also be accessed through this port.

A discrete input signal is provided through the Display Module that indicates to the CDT software when the CDT is connected to the BTE. This signal is routed to all CDT modules via the backplane. The software uses this signal to control the startup sequence and as an interlock to prevent any BTE-only operations from being performed when the CDT is operating on-train.

LED test functions for the CDT is available through software commands as well as the LED test button on the Display Module.

No separate test equipment interfaces are present on the FDP. FDP testing is performed through the vehicle interface connections.

6.4.17 PTU Functions

This section describes the MDS functions provided by the PTU. Note that all PTU software functions that do not require CDT connection to the train are also supported by the BTE software.

The PTU software runs on the PTU computer. It is a standard Windows application with a GUI designed for a screen of at least 1024x768 resolution. The PTU software communicates with the CDT at 115KBaud via a computer COM port. The COM port number is configurable. When needed the PTU software gets the time from the PC real-time clock. The PTU software includes self-diagnostics that cause the program to generate an exception and terminate on error.

The PTU software communicates with the CCP software on the CDT using the MDN protocol described in section 6.3.5.

1. Configuration Operations
   The PTU software supports the configuration operations described in section 6.4.10.2. Principally, these functions are to read and write the configuration to file and to upload and download the configuration to the PTU. It also performs sanity checks on the configuration.
2. Configuration "Signature"
   The PTU provides windows and controls to sign the configuration database. Signing the configuration consists of verifying the author and version number and then saving the configuration to file with an updated creation date and a CRC16 code. The signed configuration file can only be loaded into the PTU again if its CRC16 is valid. The configuration can only the transferred from the PTU to the CDT if it has been previously signed.
3. Real-time data display.
   At least once per second the CCP software sends the current value of all status, parameter and equation data from the RTDB to the PTU. The PTU provides windows to display this data in a similar manner to how it is displayed on the CDT. Data is sent without any configuration information. The PTU software uses its copy of the configuration to convert the data to the display format.
4. Download CDT log file
   Using the PTU software, the operator selects the start and end times to download. The operator can indicate that the start time is to be the start of the log and/or the end time is the end of the log without having to indicate a specific time. The PTU sends a command to the CDT with the request and then the CDT transfers all records from the CDT Log between the start and end to the PTU. The PTU saves the log data to file in csv format. The PTU software uses its copy of the configuration to add other details to the file such as item name and severity. The PTU software also converts the raw parameter values based on its copy of the configuration.
5. Clear CDT log file
   Using the PTU software, the operator selects the Clear CDT Log File operation. The PTU software displays a confirmation prompt and then, if confirmed, sends the command to the CDT. The CCP software erases all data from the CDT log. This operation is irreversible.
6. Download propulsion, braking and spin/slide recorded data
   Using the PTU software, the operator selects the subsystem to contact. The operator specifies the log file to download to the PTU. The PTU sends the command to the CCP software which, in turn, relays the command to the subsystem via the MDS car monitoring network. The subsystem returns the file to the CCP which is then forwarded to the PTU and saved to disk file. The details of the file transfer are in the Propulsion Car Monitoring Network ICD (DDN-0432-0085) and Friction Brakes Car Monitoring Network ICD (DDN-0432-0086). Neither the PTU nor the CCP software interprets the file received from the subsystem or alters it in any way.

7. Update CDT software
   The software on the CDT is updated using the PTU as described in section 6.4.20.
8. Update software on other subsystems
   The software on MDS car monitoring network subsystems is updated using the PTU as described in section 6.4.21.
9. Query software version information
10. Password Protection
    The PTU software provides password protection for all software functions using the method described in section 6.4.18.

6.4.18 Password Protection

Password protection is provided for MDS operations through the PTU software based on the Windows groups to which the currently logged-on user belongs. The PTU software determines if the user is a member of any of the following groups: “CDT-User”, “CDT-Engineer”, and "CDT-Updater”.

- If the user is not a member of any of the three CDT groups, the PTU software enables only the basic features: read the configuration from disk, display real-time data and query software version information.
- If the user is a member of the “CDT-User” group then the PTU software enables the basic features plus: download CDT log file and download propulsion braking and spin/slide recorded data.
- If the user is a member of the “CDT-Engineer” group then the PTU software enables the CDT-User features plus: write configuration to disk, send/receive configuration to CDT, sign configuration, clear CDT log file and initiate touch screen calibration.
- If the user is a member of the “CDT-Updater” group then the PTU software enables the CDT-Engineer features plus: update software on CDT and on other car subsystems.

6.4.19 Software Version Information Query

Through the PTU or CDT display, the user can initiate a query to determine the software version information for each Software Configuration Item (SCI) on the CDT and on the other subsystems. The information includes the SCI index, type, name and version. Part number and build date/time may also be displayed if provided.

6.4.20 C166 Microcontroller Software Update

This section describes the software update scheme used by the C166 microcontrollers in the CDT. Two SCIs reside on each of these microcontrollers: the ST276-Boot SCI, and the processor-specific “application” SCI. The Display Module application software is the CCP SCI and the IOM application software is the IOP SCI.

Flash memory is reserved for two copies of the application image: the “active” application and the “alternate” application. The active application image is the one that is executed by the microcontroller. The alternate application image is a temporary copy that is used only during software updates. The alternate application image is compressed at approximately a 2:1 ratio. Both active and alternate images have associated CRC-16 checks that can be used to verify that the image is uncorrupted.

When the software is initially loaded at the factory, it is loaded through the microcontroller’s diagnostic serial port. The diagnostic serial port is separate from the PTU port and is only internally accessible. A COTS utility (ST10Flasher, part of the BTE software configuration) running on a Windows PC (such as the BTE PC) is used to load the new image. In the initial configuration, the ST276-Boot and active application are loaded into flash memory. The alternate application image is left blank.

Once the initial software is loaded, the application image is updated using the following scheme illustrated in Figure 10:

- The PTU or BTE software reads the application software from disk file. The image in the file is compressed.

- The PTU or BTE software transfers the compressed image to the target C166 microcontroller via the PTU serial port. Note that the PTU serial port is managed by the CCP SCI, so if the image is destined for the IOP, the CCP forwards it via the CAN Bus backplane.
- The active application on the target C166 saves the compressed application image in the alternate application portion of flash memory.
- The application SCI verifies using the CRC-16 that the alternate application image has been received intact, and reports this back to the PTU or BTE software.
- The PTU or BTE software sends a message to the application SCI telling it to reset its processor.
- The ST276-Boot SCI runs after reset and determines that the alternate application is valid and different from the active application. At this point the ST276-Boot SCI erases the active application and overwrites it with the alternate image. The ST276-Boot SCI uncompresses the image before copying it to the active location.
- The ST276-Boot SCI verifies that the new active application is intact using the CRC-16 and then launches the application.
- On initialization, the active application updates the alternate application to indicate that it is no longer needed. This prevents the ST276-Boot from reprogramming the application on the next power cycle.

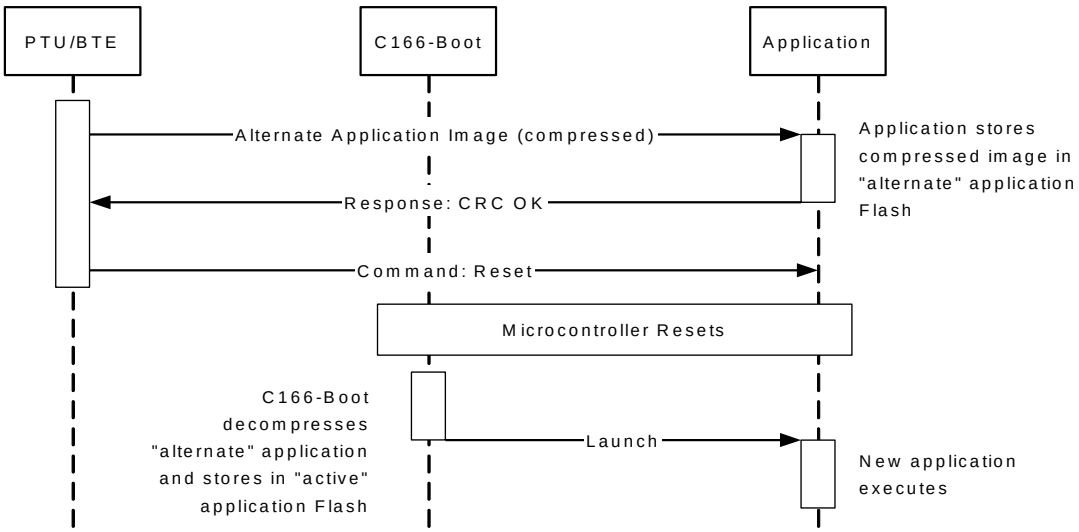

Figure 10: C166 Software Update Sequence Diagram

If the process is interrupted at any time during transfer of the alternate image, the previous application image is still available for use; the microcontroller may require rebooting to restart the software. If the process is interrupted at any time after the previous application image is erased, the new image remains intact and the ST276-Boot SCI will find it and install it when the microcontroller is next reset.

Updating the ST276-Boot SCI after a CDT is put into service is not normally required. If the ST276-Boot needs to be updated it can be reprogrammed in a workshop environment through the microcontroller's diagnostic serial port using the ST10Flasher utility. The ST276-Boot SCI cannot be updated through the PTU port.

Each time the microcontroller is reset, the ST276-Boot SCI runs first and checks the CRC-16 of the active application image. It will not run the application if the CRC check does not pass. If both the active

application image and the alternate application images are invalid then the ST276-Boot enters a diagnostic mode that supports memory inspection and other tests used in a workshop environment.

6.4.21 Car Monitoring Network Subsystem Software Update

Software on other MDS car monitoring network subsystems can be updated on the car through the CDT using the scheme shown in Figure 11.

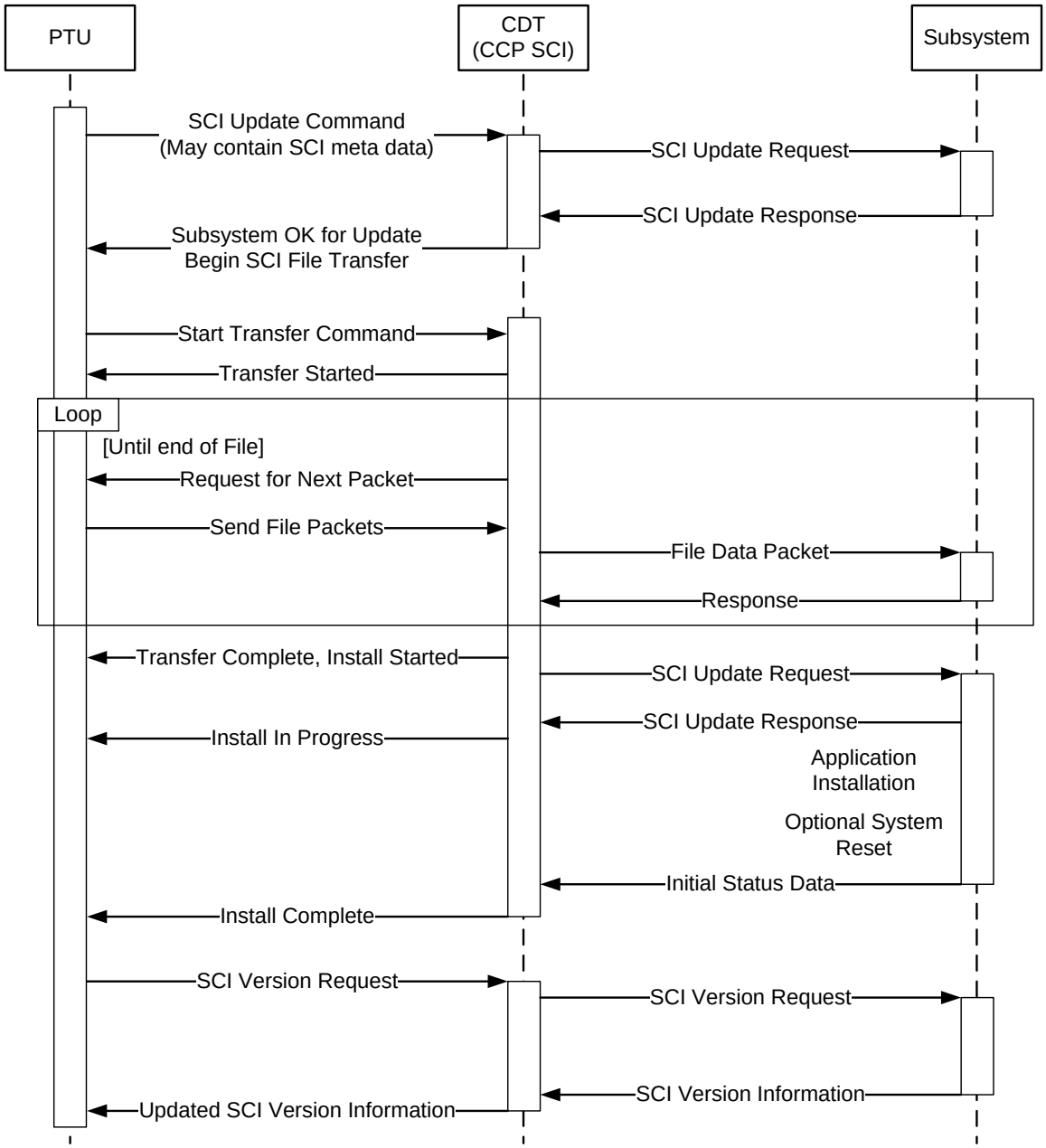

Figure 11: MDS Car Monitoring Network subsystem Software Update

- The PTU software reads the application software from disk file along with an optional file that contains the application meta-data such as version number, file length and image index.

- The PTU software sends a request to the CCP SCI via the CDT PTU port to start the transfer. The CCP SCI forwards this request to the target subsystem via the MDS car monitoring network.
- The target subsystem responds. This response may indicate that the transfer request is accepted or refused. The CCP SCI forwards this response to the PTU.
- If the update is accepted then the PTU sends the file to the CCP SCI. The CCP SCI stores and forwards the file to the target subsystem as a sequence of packets using file transfer protocol. The packet size between the PTU and CCP may be larger than between the CCP and target subsystem, depending on target subsystem buffer configuration. In this case the CCP will automatically break the larger packets up for forwarding.
- During the file transfer, the Network Manager updates the Transfer State network variable once every 10 seconds to indicate a transfer is in progress.
- When the transfer is complete, the CCP SCI sends a notification message to the PTU and then sends a request to the target subsystem to install the new image.
- After the transfer is complete, the Network Manager updates the Transfer State network variable to indicate that no transfer is in progress.
- The target subsystem sends a response. This response may indicate that the installation request is accepted or refused. The CCP SCI forwards this response to the PTU.
- If the installation request was accepted then the target subsystem installs the application and, optionally, resets.
- When the new application is running, the target subsystem sends initial status data to the CCP SCI. The CCP SCI then notifies the PTU that the installation is complete.
- Once the installation is complete, the PTU sends a request to the CCP SCI for the SCI version information from the target subsystem. The CCP forwards this to the target subsystem and then forwards the response back to the PTU. The PTU displays the SCI version information for the user.

The details of the network file transfer from CDT to another car subsystem are described in the MDS Car Monitoring Network ICD (DDN-0432-0080).

6.4.22 Neuron Based Software Update

All Car Monitoring Network subsystems employ an Echelon Neuron processor for network communications. Update of the Neuron SCI on-board the train is outside of Quester Tangent's scope of supply.

See DDN-0432-0060 Special Tools and Test Equipment Design Description for details of CDT Neuron software update using the Bench Test Equipment.

Note that the procedure for uploading a software image to the Neuron microcontroller deletes the previous image. Any interruption to the upload procedure will leave the microcontroller temporarily in a non-operational state, and will therefore inhibit a subset of that subsystem's operation. Full operation can be recovered by restarting and completing the software image upload procedure. The full procedure may require that the updated subsystem be power-cycled after the image is installed.

6.4.23 Unused

This section is unused but remains to preserve section numbering.

6.4.24 Module Serial Numbers

The CCP software on the Display Module and IOP software on the I/O Modules provide a feature to record the board serial number in Non-Volatile RAM (NVR). The software provides a mechanism to enter the serial number during manufacturing and write the value to NVR. The board software also provides the functions to read the board serial number and communicate it to the operator and BTE during manufacturing testing and troubleshooting.

6.4.25 Board ID and Slot ID

The Display Module and I/O Modules each have an encoded Board ID that indicates the module type, revision and version level. The modules also read the Slot ID, which indicates the slot number into which the module is inserted.

The ST276-Boot, CCP and IOP software all read the Board ID on startup and use it to verify software compatibility with the hardware.

6.4.26 Real Time Clock (RTC)

The CDT maintains a Real-Time Clock used for time stamping of logged events. The clock is set automatically from the time broadcast over the MDS car monitoring network. When LVPS power to the CDT is turned off, the power for the RTC is maintained for up to 20 days by a “super cap”. The RTC is read and written by the CCP software on the Display Module. The CCP software self-diagnostics report RTC errors.

6.4.27 Last Exception

The CCP software on the Display Module and IOP software on the I/O modules provide a feature to record the details of the last exception thrown in NVR. The software also provides necessary functions to read the details of the last exception using the debug serial port.

7 Performance Characteristics

7.1 Car Monitoring Network Bandwidth Usage

The estimates below are based on average number of bytes per network variable. The following tables show the number of bytes per network variable packet type and the number of network variable transmissions in a 2-second window.

The following assumptions are made for the analysis:

- Number of nodes = 12, including CDT. See DDN-0432-0080 for list of nodes.
- Baseline throughput is based on status and parameter traffic only.
- Parameters with transmission rate greater than 2 seconds have negligible impact on traffic analysis and are not included.

Table 11: Network Variable Packet Size

PACKET TYPE	SERVICE	CASTING	OVERHEAD BYTES	MESSAGE BYTES	TOTAL BYTES
Status bit vector	acknowledged	unicast	12	8	20
Parameter (numeric)	unacknowledged	unicast	12	3	15
Acknowledgement	—	unicast	9	0	9

Table 12: Network Variable Counts

VARIABLE USAGE BREAKDOWN	VARIABLE COUNTS
All subsystems send the CDT 1 or 2 status packets: Propulsion and Auxiliary Power send 2 packets each, All other subsystems send 1 packet per node. CDT sends 1 status packet to other subsystems (unacknowledged)	14 status packets plus 13 acknowledgement packets
Parameters sent to the CDT: 39 parameters – other subsystems to CDT 4 parameters - CDT to other subsystems	43 parameter packets

Total packets per CDT cycle (2 seconds) per car:

- Status packets = 14 @ 20 bytes = 280 bytes
- Parameter packets = 43 @ 15 bytes = 645 bytes
- Acknowledgement packets = 13 @ 9 bytes = 117 bytes

- Total bytes on network per cycle per car = 1042 bytes
- Packets on network per cycle per car = 70 packets
- Average bytes per packet = 14.9 bytes

Echelon's "Perf" utility reports that, on an FTT-10 network, operating at 78,125 bps, the maximum sustainable throughput is 175 packets per second at an average packet size of 15 bytes. This represents $(175 \times 15 \times 8) / 78125 = 26.9\%$ of the bit rate of the physical medium.

In two seconds the theoretical bandwidth of the network is 350 sustained packets.

For a car, the network usage factor is (70 / 350) or about 20% of the maximum sustainable throughput

7.2 Logging Memory Usage

This section provides estimates of the memory usage in the CDT Log. These estimates are based on logged data rates observed in revenue service on Quester Tangent's Health Monitoring Unit (HMU) operating on Vancouver SkyTrain Mk 2 vehicles. The data was collected from 10 cars over 250 cumulative days of operation. The following points are considered in the estimates:

- The Vancouver HMU operates similarly to the CDT. Both systems log status, parameter and equation data. Statuses and equation values are updated once every 2 seconds. Data items are logged when the value changes.
- In the Vancouver HMU, parameters are logged only when maintenance or engineering investigations are in progress. The HMU data used in this analysis was collected with parameter logging turned off.

The following assumptions about the operation of the Denver RTD Eagle P3 car are made to facilitate the estimates:

- The total number of status items enabled for logging will be comparable to the Vancouver HMU configuration.
- The CDT will log "vehicle snapshot data" whenever an active fault is logged. This analysis assumes that there are 10 vehicle snapshot items logged and 25 percent of the status and equations are configured to trigger vehicle snapshot logging.

The following table summarizes the HMU logging and estimates for CDT usage.

Table 13: Logging Memory Usage Reference and Estimates

	HMU SYSTEM	CDT ESTIMATE	NOTES
Subsystems Monitored	9	12	
Total Status Items	463	1000	Items identified in DDD.
Total Status Logged (triggered)	299	400	Configuration settings.
Average Events Logged	310 / day	400 / day	This estimate assumes the logging rate on the CDT is 30 percent greater than on the HMU.
Estimated Total Entries	-	1400 / day	Events logged plus vehicle snapshot information. This estimate assumes that vehicle snapshot logging is triggered by 25 percent of logged events.
Bytes per Entry	-	8	
Bytes per Day	-	11200	
Bytes per 92 Days	-	1030400 ~1MB	
Logging Memory Size	-	> 1.5 MB	4 MB flash memory device, with sectors reserved for configuration data and alternate application software image.

Based on these estimates, the logging memory is sufficient to record 3 months of data during normal operation.

7.3 File Transfer Time

File transfer time estimates over the MDS car monitoring network were evaluated using existing Quester Tangent equipment developed for another transit system with identical LonWorks network characteristics. The test network was loaded with background traffic to simulate 50 percent network utilization and a series of raw file transfers were performed. This test used message sizes and network buffer configuration as per the design of the MDS car monitoring network.

A file transfer rate of 4.5 kB/second was measured. This measured transfer rate is used in the following file transfer time calculations.

7.3.1 Wayside Data Transfers

CDT data is transferred to wayside processing software via the Communications subsystem in two forms, "Recent Faults" and "Historical", as described in section 6.4.11. The file consists of a short fixed-size header followed by a sequence of data item entries, corresponding to records in the CDT Log. The data file format is described in detail in the Wayside Data Transfer ICD (DDN-0432-0093).

The following table presents estimates of file transfer times between the CDT and the Communications subsystem for each file type. The table includes the worst case for Historical data transfer where the entire CDT Log is transferred. File transfer functions and performance between the Communications subsystem and the wayside infrastructure is outside the scope of this document.

The following assumptions are used for wayside transfer file size:

- • Typical number of entries for a Historical file is equal to estimate for CDT logging in section 7.2.
- • Typical number or entries for a Recent Faults file is 50 percent of the Historical file.
- • In normal operations, period between Historical transfers is no more than 3 days.
- • In normal operations, period between Recent Faults transfers is no more than 1 day.

Table 14: CDT Wayside Data Transfer File Size

	RECENT FAULTS	HISTORICAL	HISTORICAL (ENTIRE LOG)
Entries per day	700	1400	
Days between transfers	1 maximum	3 maximum	
Bytes per entry	8	8	8
kB total data	5.6	33.6	1600
Transfer Time	< 2 seconds	< 8 seconds	< 6 minutes

The CDT requires a few seconds (estimate 5 s, to be confirmed) to prepare the file before transfer after a request is received from the Communications subsystem. This applies to each wayside data transfer request.

Based on preliminary station and yard dwell time estimates by the Communications subsystem supplier, complete file transfer from the CDT to the Communications subsystem will occur within the time allowed with a generous margin.

7.3.2 Propulsion Trace File Transfers

The Propulsion subsystem supplier has described two types of files, "failure history data" and "normal trace data". The following table describes file size calculations and estimated file transfer time.

Table 15: Propulsion Subsystem Trace File Size

	FAILURE HISTORY DATA	NORMAL TRACE DATA
Files	1	9
Samples per File	1	1000 (1 per ms for 1 sec)
Data Items per Sample	256	9
Bytes per Data Item	32	54
kB per File	8.192	486
Transfer Time per File	< 2 seconds	< 2 minutes

Download of Propulsion subsystem files to the PTU via the CDT will not present significant delays for maintenance technicians.

7.3.3 Friction Brake Log File Transfers

The Friction Brakes subsystem supplier has described two types of files, "history log" and "event log data". The following table describes file size calculations and estimated file transfer time.

Table 16: Friction Brake Subsystem Log File Size

	HISTORY LOG	EVENT LOG DATA
Files	1	40 – 60
Records per File	1200 maximum	500 (1 per 20 ms for 10 sec)
Bytes per Record	16 – 20	30 – 60
kB per File	19.2 – 24.0	15 – 30
Transfer Time per File	4 to 5 seconds	3 to 7 seconds

Download of Friction Brakes subsystem files to the PTU via the CDT will not present significant delays for maintenance technicians.

Appendix A: Weight Control

Table 17: MDS Weight Control Summary

SUBSYSTEM	WEIGHT (LBS)	NOTES
CDT	25	
FDP	10	
TOTAL	**35**	

Note: Weights indicated in this table are based on similar equipment and indicate maximum (not to exceed) values. They do not include mating connectors or interconnection cables.