Quester Tangent Corporation

Denver Regional Transportation District (Denver RTD)
Contract N8US-30-F0003

Monitoring and Diagnostic System (MDS)

Communications
Car Monitoring Network
Interface Control Document (ICD)

Prepared by: **Steve Dyck**
Hardware Team Lead

Verified by: **Christian Lecerc**
Software Team Lead

Approved by: **Greg Nuttall**
Project Engineer

Issue Date: 23 September 2011
Document Number: DDN-0432-0091
Revision: R01

Making Data Intelligent™

DATE	REVISION	DESCRIPTION
02-Sept-2011	R00	Initial version
23-Sept-2011	R01	Added Wayside information. Added time synchronization.

COPYRIGHT

Copyright © 2011 by Quester Tangent Corporation. All rights reserved. This item and the information contained herein are the property of Quester Tangent Corporation. No part of this document may be reproduced, transmitted, stored in a retrieval system, or translated into any language or computer language in any form or by any means, electronic, mechanical, magnetic, optical, chemical, manual, or otherwise, without the express written permission of Quester Tangent Corporation.

Quester Tangent Corporation
6582 Bryn Road
Saanichton, BC, Canada V8M 1X6
Tel: 250-656-6677
Fax: 250-655-4696
www.questertangent.com

Table of Contents

1 Introduction 5
2 Network Physical Layer Interface Design 5
3 Network Management 5
3.1 Node Documentation 6
3.1.1 Node Self-Documentation String 6
3.1.2 Node Program ID 6
4 Network Node 6
4.1 Node Object – Object #0 7
4.1.1 nvi00ObjRequest 7
4.1.2 nvo00ObjStatus 8
4.1.3 nvi00CDTCommand 8
4.1.4 nvo00TimeStamp 8
4.1.5 nvi00FileReq 8
4.1.6 nvo00FileStat 8
4.1.7 nci00NetConfig 9
4.2 Monitoring Object – Object #1 9
4.2.1 nvi01Subscribe 9
4.2.2 nvo01StatusBits 9
4.2.3 nvo01StatusBits2 9
4.2.4 nvi01TransfState 9
4.2.5 nvo01Parameter 10
4.2.6 nvi01CDTStBits 10
4.2.7 nvi01CDTParam 10
4.3 SCI Version Object – Object #3 10
4.3.1 nvi03SCIVersReq 10
4.3.2 nvo03SCIVersion 11
4.4 Wayside Data Transfer Object – Object #4 11
4.4.1 nvi04WaysidResp 11
4.4.2 nvo04WaysideReq 11
5 Network Interface 12
5.1 General 12
5.2 Subsystem Specific Network Interface Declarations 12
5.2.1 UNVT_CDT_command 12
5.2.2 UNVT_wayside_request 12
5.2.3 UNVT_wayside_response 13
5.3 File Transfers 13
5.3.1 Wayside File Transfer Details 13

6 Self-Installation Data 16
6.1 Domain Configuration 16
6.2 Location Configuration 16
6.3 Address Configuration 16
6.4 Network Variable Configuration 17

List of Tables

Table 1: Communications Subsystem – Network Physical Layer Interface Design 5
Table 2: CDT Commands 8
Table 3: Status Data Received from CDT 10
Table 4: Parameter Data Received from CDT by the Comm System 10
Table 5: SCI Information 11
Table 6: Wayside File Transfer Request Types 12
Table 7: Wayside File Transfer Response Types 13
Table 8: File Transfers 13
Table 9: Address Table 16
Table 10: Network Variable Configuration 17

List of Figures

Figure 1: Communications Node 7
Figure 2: Wayside File Transfer - Single Block 14
Figure 3: Wayside File Transfer - Multiple Blocks 15

1 Introduction

This document defines the Communications subsystem specific interface to the MDS car monitoring network described in the MDS Car Monitoring Network ICD (DDN-0432-0080).

This document is intended as the main tool for development and integration of the Communications subsystem onto the train for the supplier as well as for Hyundai-Rotem and Quester Tangent.

Information contained in this document is essential to the supplier in order to complete the software that will implement the MDS Car Monitoring Network interface. For this reason, any updates of the information contained in this document will be made available to the supplier with the shortest possible delay.

2 Network Physical Layer Interface Design

Table 1 documents the Communications subsystem's network physical layer interface design.

Table 1: Communications Subsystem – Network Physical Layer Interface Design

Feature	Subsystem Info	Notes
Network processor	Woojin to fill in	
Transceiver type	Woojin to fill in	
LEDs (Tx, Rx, Service)	Woojin to fill in	
Service pushbutton	Woojin to fill in	
Common mode isolation choke	Woojin to fill in	
Magnetic shield	Woojin to fill in	
Surge absorbing flash tubes	Woojin to fill in	
Submit subsystem network interface design for review by QT?	Woojin to fill in	

3 Network Management

The subsystem shall be capable of self-installation, i.e. set the system's own network configuration without intervention by a network management tool. Full details of the required settings are provided in the current versions of the MDS Car Monitoring Network ICD document (DDN-0432-0080) and in this document.

All nodes shall support possible future usage of a network management tool, as described in the MDS Car Monitoring Network ICD document.

3.1 Node Documentation

3.1.1 Node Self-Documentation String

The Neuron C source code declaration shall be:

```
#pragma set_node_sd_string "COMM, Woojin PPPP, DDDD"
```

PPPP:	Supplier part number
DDDD:	Neuron SCI revision date in format YYYY-MM-DD

3.1.2 Node Program ID

The Neuron C source code declaration shall be:

```
#pragma set_id_string "COMM"
```

4 Network Node

Figure 1 shows the Communications Node functional blocks, network variables and configuration properties. The following subsections provide network variable and configuration property details.

Note: Object numbering is consistent across all subsystems on the train. Object #2 (SCI Update) is not used for the Communications node.

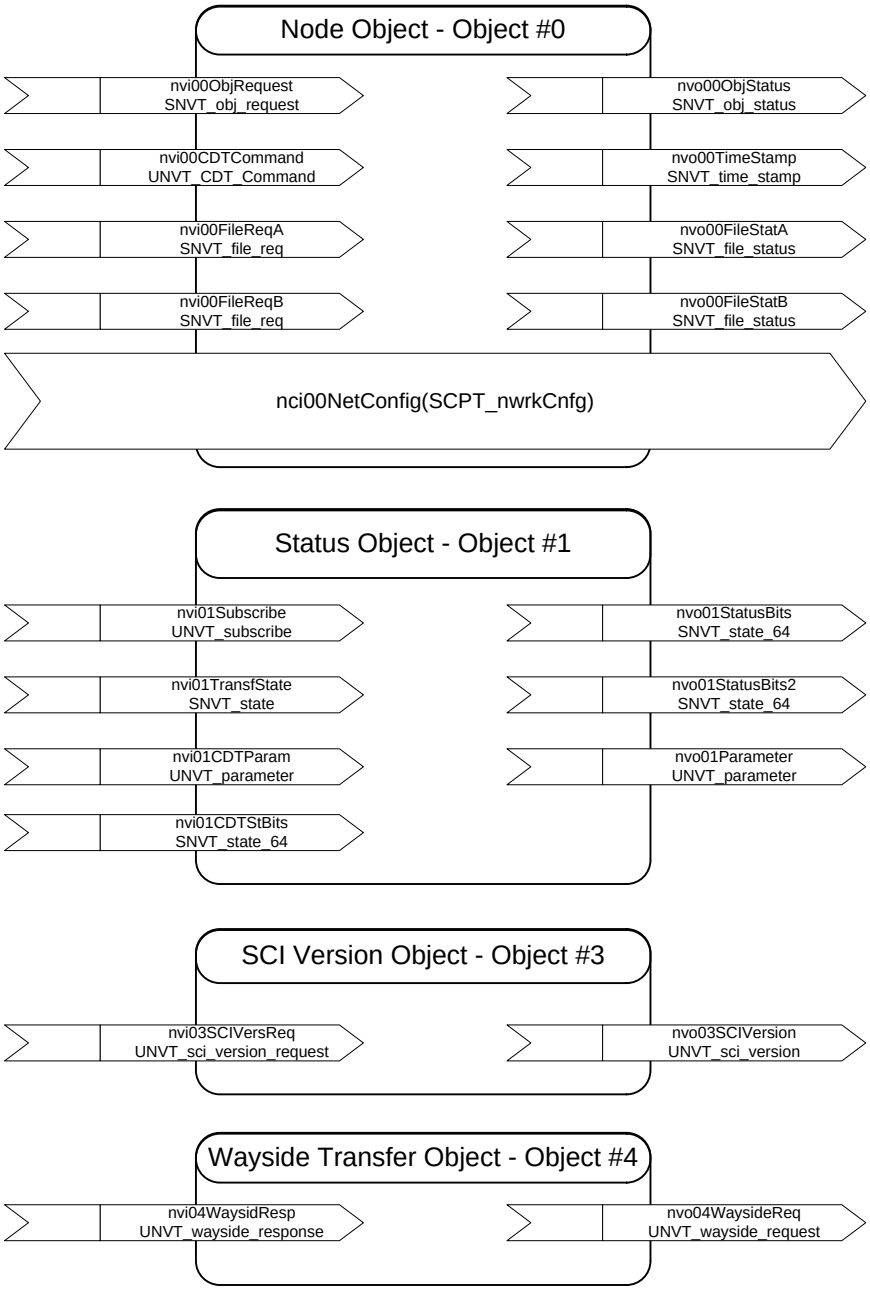

Figure 1: Communications Node

4.1 Node Object – Object #0

4.1.1 nvi00ObjRequest

Declaration: network input sd_string("@0|1") SNVT_obj_request nvi00ObjRequest

Description: Mandatory variable defined in LonMark Functional Profile: Node Object, LonMark SNVT Master List. This input variable provides the mechanism to request a particular mode for the node as a whole.

4.1.1.1 Data Value

Refer to the SNVT Master List and DDN-0432-0080 for request types supported.

4.1.2 nvo00ObjStatus

Declaration: network output sd_string("@0|2") SNVT_obj_status nvo00ObjStatus

Description: Mandatory variable defined in LonMark Functional Profile: Node Object, LonMark SNVT Master List. This output variable reports the general status of the node.

Destination: CDT

4.1.2.1 Data Value

Refer to the SNVT Master List and DDN-0432-0080 for status items supported.

4.1.3 nvi00CDTCommand

Declaration: network input sd_string("@0|3") UNVT_CDT_command nvi00CDTCommand

Description: Command from the CDT. See section 5.2.1 for the description of this data structure.

4.1.3.1 Data Value

Table 2: CDT Commands

ID	CDTCommand	Argument	System Info	Notes
1	Broadcast Time	Unused		In response, the Communications subsystem shall update and transmit its nvo00TimeStamp network variable one time. Periodic transmission of the network variable is unaffected. CDT command will be sent at network startup and as required.

All other nvi00CDTCommand values shall be ignored.

4.1.4 nvo00TimeStamp

Declaration: network output sd_string("@0|4") SNVT_time_stamp nvo00TimeStamp

Description: The Communications subsystem shall provide the current UTC time to all other subsystems i.e. to all nodes in the car. The communication system shall send this network variable when receiving a command through the nvi00CDTCommand network variable and once per hour.

Destination: Domain Broadcast

4.1.4.1 Data Value

Current time in UTC format.

4.1.5 nvi00FileReq

Declaration: network input sd_string("@0|5") SNVT_file_req nvi00FileReq

Description: Receives requests from the CDT, used to control file transfer for wayside transfer.

4.1.5.1 Data Value

See DDN-0432-0080 section 7.2.

4.1.6 nvo00FileStat

Declaration: network output sd_string("@0|6") SNVT_file_status nvo00FileStat

Description: Sends file transfer status to the CDT during wayside transfer.

Destination: CDT

4.1.6.1 Data Value

See DDN-0432-0080 section 7.2.

4.1.7 nci00NetConfig

Declaration: config network input sd_string("&0,,0\x90,25;") SCPTnwrkCnfg nci00NetConfig

Description: All nodes must support self-installation and provide a configuration property to allow a network tool to override the node's self-installation procedure. If the value of this variable is set to CFG_EXTERNAL when the node is reset or powers up, then the node shall not execute any of its self-installation functions. See DDN-0432-0080 section 6.3.5 for details.

4.1.7.1 Preset Value

This variable shall be initialized to CFG_LOCAL when subsystem software is reloaded and when units are delivered from the factory.

4.2 Monitoring Object – Object #1

4.2.1 nvi01Subscribe

Declaration: network input sd_string("@1|1") UNVT_subscribe nvi01Subscribe

Description: Used by the CDT to set the required transmission rate for monitoring data sent to the CDT.

4.2.1.1 Data Value

See DDN-0432-0080 section 6.5.3.

4.2.2 nvo01StatusBits

Declaration: network output sd_string("@1|2") SNVT_state_64 nvo01StatusBits

Description: Current subsystem status.

Destination: CDT

4.2.2.1 Data Value

The Diagnostics Data Dictionary defines the status bit assignments and associated attributes for bits 0-55. Bits 56-63 represent a counter.

4.2.3 nvo01StatusBits2

Declaration: network output sd_string("@1|3") SNVT_state_64 nvo01StatusBits2

Description: Current subsystem status.

Destination: CDT

4.2.3.1 Data Value

The Diagnostics Data Dictionary defines the status bit assignments and associated attributes for bits 56-111. Bits 112-119 represent a counter.

4.2.4 nvi01TransfState

Declaration: network input sd_string("@1|4") SNVT_state nvi01TransfState

Description: Used by CDT to suspend network traffic during file transfer operations.

4.2.4.1 Data Value

See DDN-0432-0080 section 6.5.6.

4.2.5 nvo01Parameter

Declaration: network output sd_string("@1|5") UNVT_parameter nvo01Parameter

Description: Current numeric parameter value.

Destination: CDT

4.2.5.1 Data Value

The Diagnostics Data Dictionary defines the numeric parameter ID assignments and associated attributes .

4.2.6 nvi01CDTStBits

Declaration: network input sd_string(“@1|6”) SNVT_state_64 nvi01CDTStBits

Description: Current status information reported by other subsystems, CDT digital inputs or the CDT. The network variable is sent by the CDT every two (2) seconds.

4.2.6.1 Data Value

The following table defines the boolean status index assignments.

Table 3: Status Data Received from CDT

Index	Description	Notes
0	Active Cab	CDT discrete input
1	Traction command	Powering operation mode from Propulsion status information
3	All Doors closed	CDT Discrete input

The V Diagnostics Data Dictionary defines the CDT status assignments available to other car subsystems (if required).

4.2.7 nvi01CDTParam

Declaration: network input sd_string(“@1|8”) UNVT_parameter nvi01CDTParam

Description: Current numeric parameter value sent by the CDT.

4.2.7.1 Data Value

The following table defines the numeric parameter ID assignments.

Table 4: Parameter Data Received from CDT by the Comm System

ID	Description	Units or scale/offset	Transmission Rate	Notes
	None			

The Diagnostics Data Dictionary defines all the CDT parameters assignments available to other car subsystems.

4.3 SCI Version Object – Object #3

4.3.1 nvi03SCIVersReq

Declaration: network input sd_string("@3|1") UNVT_sci_version_request nvi03SCIVersReq

Description: Used by CDT to request SCI version information. SCI identified by index number.

4.3.1.1 Data Value

Refer to the table in section 4.3.2.1 for the complete list of subsystem SCIs.

4.3.2 nvo03SCIVersion

Declaration: network output sd_string("@3|2") UNVT_sci_version nvo03SCIVersion

Description: Populated by subsystem with requested SCI version information.

Destination: CDT

4.3.2.1 Data Value

The following table documents SCI information. DDN-0432-0080 section 6.7.2 describes SCI types.

Table 5: SCI Information

SCI INDEX	SCI NAME (NOTE 1)	SCI TYPE (NOTE 1)	SCI NAME (8 CHAR) (NOTE 1)
1	Woojin to fill in		
2	…		
3	…		
4	…		
5	…		
6	…		
7	…		
…	…		

Note 1: See DDN-0432-0080 (Section 6.7.2 nvoSCIVersion) for details.

4.4 Wayside Data Transfer Object – Object #4

4.4.1 nvi04WaysidResp

Declaration: network input sd_string("@4|1") UNVT_wayside_response nvi04WaysidResp

Description: Response from a CDT in support of Wayside data transfer. See section 5.2.3 for the description of the data structure.

4.4.1.1 Data Value

See section 5.2.3.

4.4.2 nvo04WaysideReq

Declaration: network output sd_string("@4|2") UNVT_wayside_request nvo04WaysideReq

Description: Signals the CDT to manage the Wayside file transfer. See section 5.2.2 for the description of the data structure.

Destination: CDT

4.4.2.1 Data Value

See section 5.2.2.

5 Network Interface

5.1 General

The Communications subsystem complies with the general monitoring scheme defined in DDN-0432-0080 section 6.

5.2 Subsystem Specific Network Interface Declarations

Declarations in this section use Neuron C conventions, i.e. ‘short’ is an 8-bit value, ‘long’ is 16-bits and ‘quad’ is 32-bits.

5.2.1 UNVT_CDT_command

UNVT_CDT_command structure declaration:

```
typedef struct {
      unsigned short    command_id;
      unsigned long     command_arg;
} UNVT_CDT_command;
```

Field descriptions:

- command_id: Identifies the command that is being sent; its valid range is 1 to 255. A value of 0 shall not be used.
- command_arg: Optional argument to the command. It shall be set to 0 if the argument is unused.

5.2.2 UNVT_wayside_request

UNVT_wayside_request structure declaration:

```
typedef struct {
      unsigned short    request;
      unsigned quad     time_stamp;
} UNVT_wayside_request;
```

Field descriptions:

- request: Identifies the Wayside processing transfer request. Table 6 shows the valid request values. The receiver shall ignore any invalid value.
- time_stamp: Time reference for the last received log entry. Time is stored as seconds since midnight Jan 1, 2000.

Table 6: Wayside File Transfer Request Types

REQUEST NUMBER	REQUEST NAME	TIMESTAMP	DESCRIPTION
1	Start Recent Faults	Ignored	Used to initiate transfer of filtered CDT log entries. CDT maintains timestamp from last successful transfer and will ignore any time_stamp data.
2	Ack Recent Faults	Required	Used to acknowledge the Recent Faults transfer. The timestamp confirms the last successfully received entry.
3	Start Historical	Required	Used to initiate transfer of complete CDT log. Comms populates the time_stamp data from Wayside request. If time_stamp set to 0, CDT will begin file transfer from last successful confirmed Historical transfer. The Start Historical is also used to confirm the last block of Historical transfer and to initiate the next block.
4	Ack Historical	Required	Used to acknowledge the last block of Historical transfer. Time_stamp is set to the last successfully received entry.

5.2.3 UNVT_wayside_response

UNVT_wayside_response structure declaration:

```
typedef struct {
      unsigned short    response;
} UNVT_wayside_response;
```

Field descriptions:

- response: Identifies the CDT response to Wayside processing transfer requests. Table 7 shows the valid response values. The receiver shall ignore any invalid value.

Table 7: Wayside File Transfer Response Types

RESPONSE NUMBER	RESPONSE NAME	DESCRIPTION
1	Yes	New entries recorded in CDT log since last transfer (Recent Faults type) or since time stamp requested (Historical type). The CDT will initiate a file transfer of the type requested.
2	No	No new entries available. The CDT will not initiate a file transfer.

5.3 File Transfers

Table 8: File Transfers

Index	File Type	Sender	Receiver	Initiator	Notes
301	Wayside File	CDT	Comms	CDT	Used for both Recent Faults and Historical

5.3.1 Wayside File Transfer Details

Two different wayside file transfers are defined for the CDT: Recent Faults and Historical. The Communications subsystem shall determine which transfer type is appropriate based on location. The Communications subsystem shall be responsible for ensuring successful delivery of the transferred data.

The Communications subsystem shall be responsible for signalling each CDT for file transfers in a married pair configuration. These transfers shall occur sequentially so as to avoid network congestion.

The wayside file transfer protocol is as described in Echelon LonWorks Engineering Bulletin: File Transfer. The following modifications are required:

- File Packet Size = 128 data bytes (standard protocol uses 32 bytes)
- Receiver Timeout = 5000 msec
- Sender Timeout = 5000 msec

The following figures illustrate the sequence of messages between the Communications subsystem and the CDT for wayside file transfers. Figure 2 shows the messages for transferring a single block of CDT log. This will be typical for the transfer of Recent Faults. Figure 3 shows the messages for transferring multiple blocks of CDT log. This will be typical for the transfer of Historical logs.

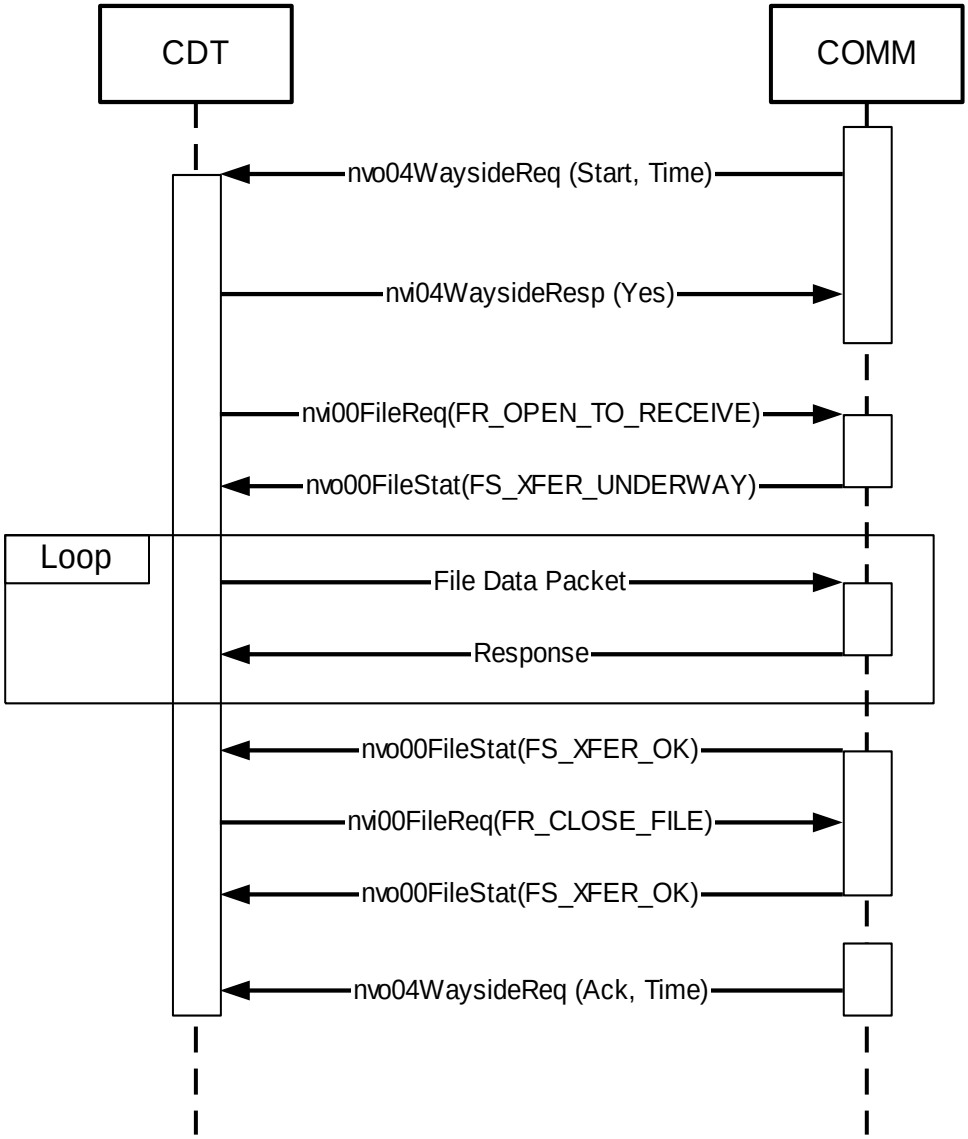

Figure 2: Wayside File Transfer - Single Block

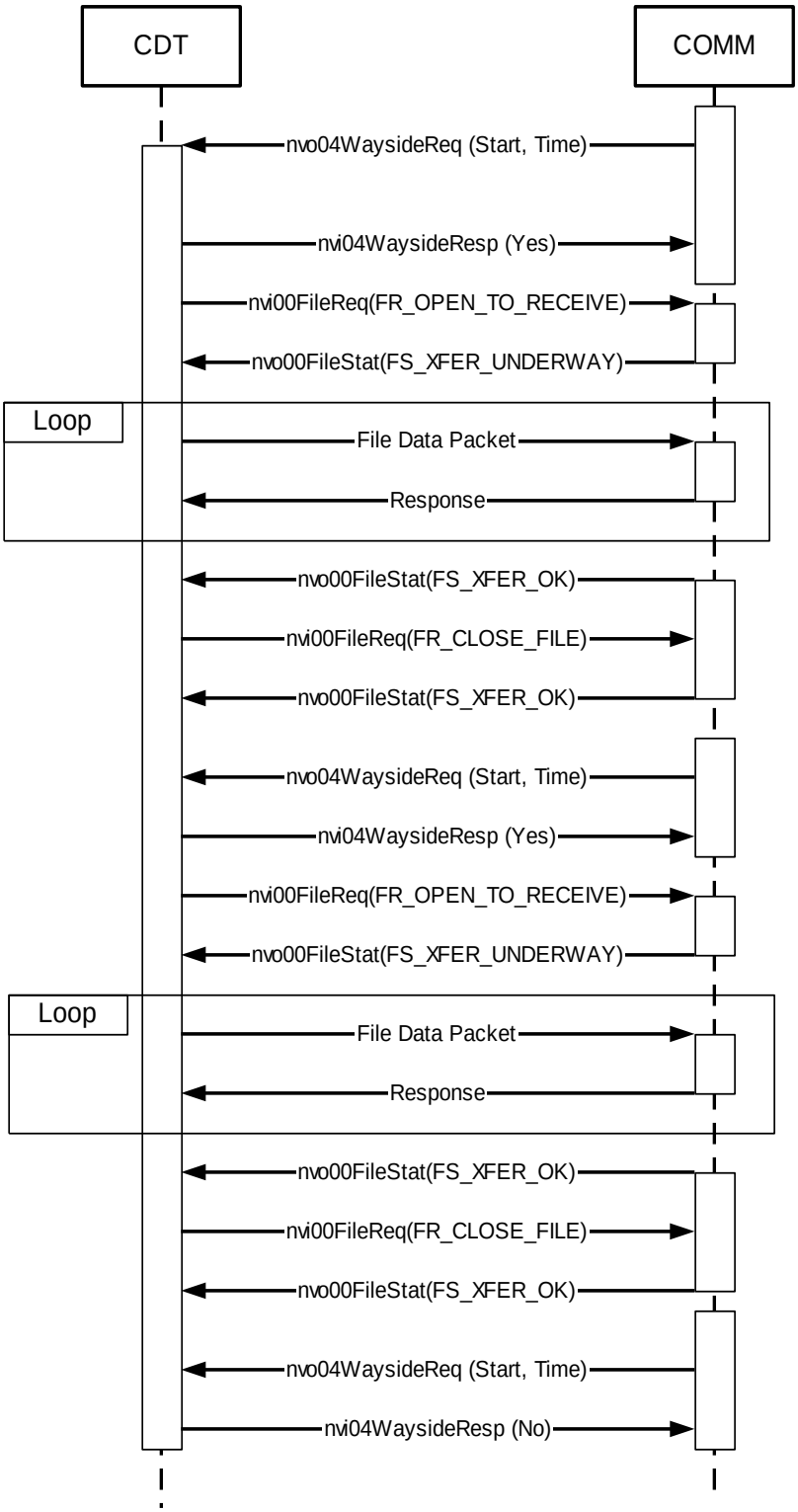

Figure 3: Wayside File Transfer - Multiple Blocks

6 Self-Installation Data

The following tables define the data needed to configure the node's network image to support self-installation.

6.1 Domain Configuration

Refer to DDN-0432-0080 section 5.1 for domain configuration details.

6.2 Location Configuration

The Neuron C source code configuration data declaration shall include:

```
config_data.location[0] = 'C';
config_data.location[1] = 'O';
config_data.location[2] = 'M';
config_data.location[3] = 'M';
config_data.location[4] = ' ';
```

For Car A:

```
config_data.location[5] = 'A';
```

For Car B:

```
config_data.location[5] = 'B';
```

6.3 Address Configuration

Table 9: Address Table

ENTRY	TYPE	DOMAIN	NODE	REPEAT TIMER	RETRY	RECEIVE TIMER	TRANSMIT TIMER	SUBNET
0	1	0	1	0	3	0	4	1
1	1	0	1	0	3	0	4	2
2	3	0	0	3	3	0	0	0
3	0	0	0	0	0	0	0	0
4	0	0	0	0	0	0	0	0
5	0	0	0	0	0	0	0	0
6	0	0	0	0	0	0	0	0
7	0	0	0	0	0	0	0	0
8	0	0	0	0	0	0	0	0
9	0	0	0	0	0	0	0	0
10	0	0	0	0	0	0	0	0
11	0	0	0	0	0	0	0	0
12	0	0	0	0	0	0	0	0
13	0	0	0	0	0	0	0	0
14	0	0	0	0	0	0	0	0

6.4 Network Variable Configuration

Table 10: Network Variable Configuration

ENTRY	VARIABLE	DIRECTION	PRIO	SERVICE	CAR A		CAR B	
					SELECTOR	ADDRESS INDEX	SELECTOR	ADDRESS INDEX
0	nci00NetConfig	0 (IN)	0	ACKD	0x0816	0x0F	0x0896	0x0F
1	nvi00ObjRequest	0 (IN)	0	ACKD	0x0801	0x0F	0x0881	0x0F
2	nvo00ObjStatus	1 (OUT)	0	ACKD	0x0802	0x00	0x0882	0x00
3	nvi00FileReq	0 (IN)	0	ACKD	0x0804	0x00	0x0884	0x0F
4	nvo00FileStat	1 (OUT)	0	ACKD	0x0805	0x0F	0x0885	0x00
5	nvi00CDTCommand	0 (IN)	0	ACKD	0x0811	0x00	0x0891	0x0F
6	nvi01Subscribe	0 (IN)	0	ACKD	0x0806	0x00	0x0886	0x0F
7	nvi01TransfState	0 (IN)	0	UNACKD	0x0109	0x00	0x0109	0x0F
8	nvo01StatusBits	1 (OUT)	0	ACKD	0x080A	0x0F	0x088A	0x00
9	nvo01StatusBits2	1(OUT)	0	ACKD	0x080B	0x0F	0x088B	0x00
10	nvo01Parameter	1 (OUT)	0	UNACKD	0x080C	0x0F	0x088C	0x00
11	nvi01CDTStBits	0 (IN)	0	UNACKD	0x0108	0x00	0x0188	0x0F
12	nvi01CDTParam	0 (IN)	0	UNACKD	0x0107	0x0F	0x0187	0x0F
13	nvi03SCIVersReq	0 (IN)	0	ACKD	0x080F	0x0F	0x088F	0x0F
14	nvo03SCIVersion	1 (OUT)	0	ACKD	0x0810	0x00	0x0890	0x00
15	nvi03SCIVersReq	0 (IN)	0	ACKD	0x080F	0x0F	0x088F	0x0F
16	nvo04WaysideReq	1 (OUT)	0	ACKD	0x0114	0x00	0x0194	0x01
17	nvi04WaysideResp	0 (IN)	0	ACKD	0x0115	0x0F	0x0195	0x0F

Note 1: Turnaround and Authentication are set to zero (0) for all variables listed.