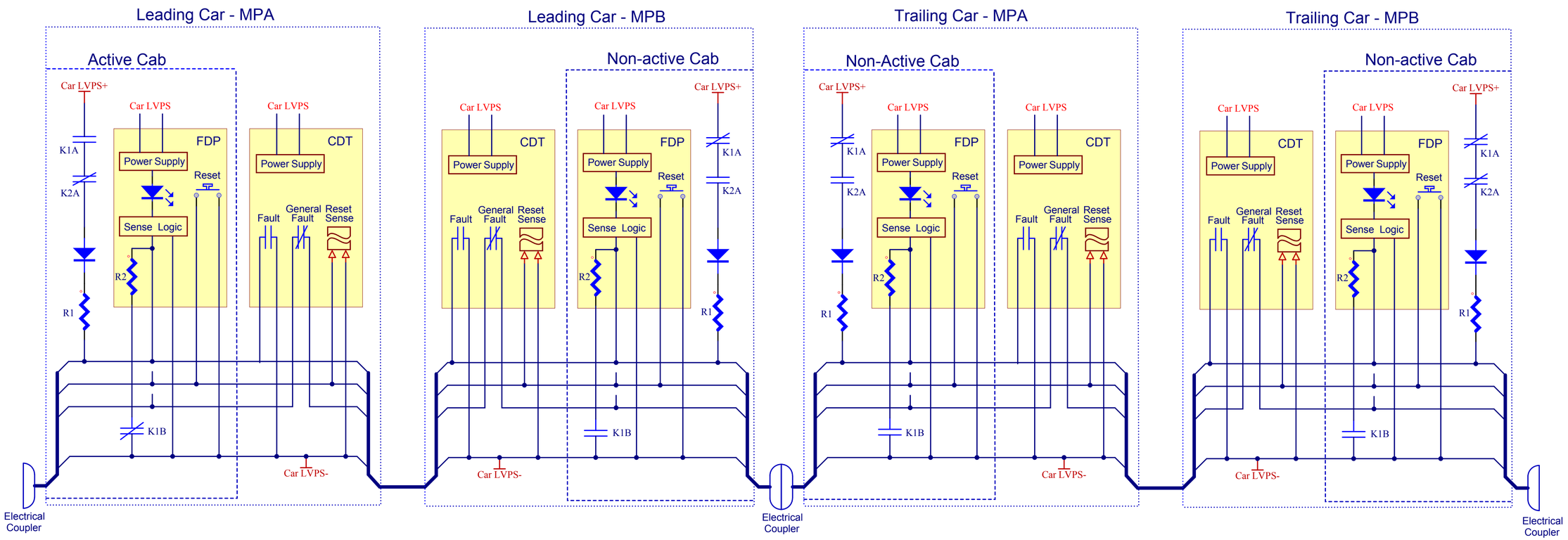

Design Notes:

K1 - Active Cab Contacts - K1A contacts closed when cab not active, K1B contacts closed when the cab is active
K2 - Electrical Coupler Contacts - K2A contacts closed when the electrical coupler is uncoupled
Contacts shown in actual state as per cab coupled / uncoupled state and active / non-active status for illustrative purposes
All CDT contacts are shown in their NO FAULT state

R1 - Fault trainline bias resistor
R2 - Fault trainline wetting current resistor

Wetting current flows from LVPS+ in the trailing cab through R1 and the trainlines to R2 in the active cab returning to LVPS- through the fault trainline common

Quester Tangent Corporation
6582 Bryn Road
Saanichton, B.C., Canada V8M 1X6
Tel: (250) 656-6677 Fax: (250) 655-4696
http://www.questertangent.com

Product Name
Fault Trainline Schematics

Part Number

Drawing
Schematic

Sheet
Fault Trainline Multi-Car Configuration

DRAWN BY	CHECKED BY	APPROVED BY	DATE
SWD	CL	GN	23-Sept-2011

SHEET SIZE	DRAWING NO.	REV	SHEET
B	DSC-0432-1500	R00	1 OF 3

REVISION HISTORY

REV	REF (CN#)	DESCRIPTION	DATE	DWN BY	APV'D
R00	0432-001	FDR Release	23-Sept-2011	SWD	GN

Copyright © Quester Tangent Corporation. Confidential document. All rights reserved. This document and its contents are the property of Quester Tangent Corporation and shall be used only as authorized in writing.

DSQ-QSQT-0418-R05

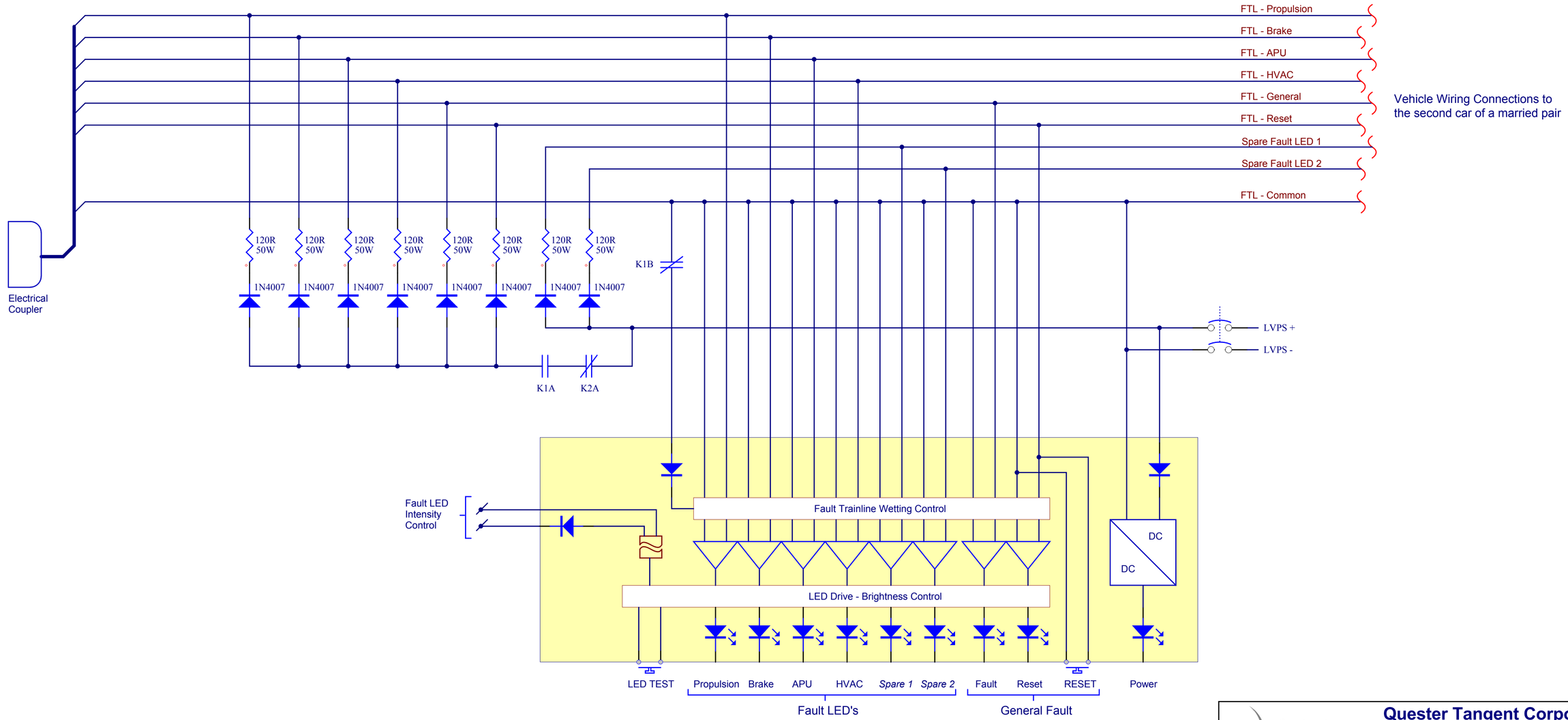

Design Notes:

K1 - Active Cab Contacts - K1A contacts closed when cab not active, K1B contacts closed when the cab is active

K2 - Electrical Coupler Contacts - K2A contacts closed when the electrical coupler is uncoupled

K1 contacts shown in active cab state, K2 contacts shown in uncoupled state

REV	REF (CN#)	DESCRIPTION	DATE	DWN BY	APV'D
R00	0432-001	FDR Release	23-Sept-2011	SWD	GN

REVISION HISTORY

Quester Tangent Corporation
6582 Bryn Road
Saanichton, B.C., Canada V8M 1X6
Tel: (250) 656-6677 Fax: (250) 655-4696
http://www.questertangent.com

Product Name
Fault Trainline Schematics

Part Number

Drawing
Schematic

Sheet
Fault Trainline Bias Circuit / FDP Connections

DRAWN BY	CHECKED BY	APPROVED BY	DATE
SWD	CL	GN	23-Sept-2011

SHEET SIZE	DRAWING NO.	REV	SHEET
B	DSC-0432-1500	R00	2 OF 3

Copyright © Quester Tangent Corportation. Confidential document. All rights reserved. This document and its contents are the property of Quester Tangent Corporation and shall be used only as authorized in writing.

DSQ-QSQT-0418-R05

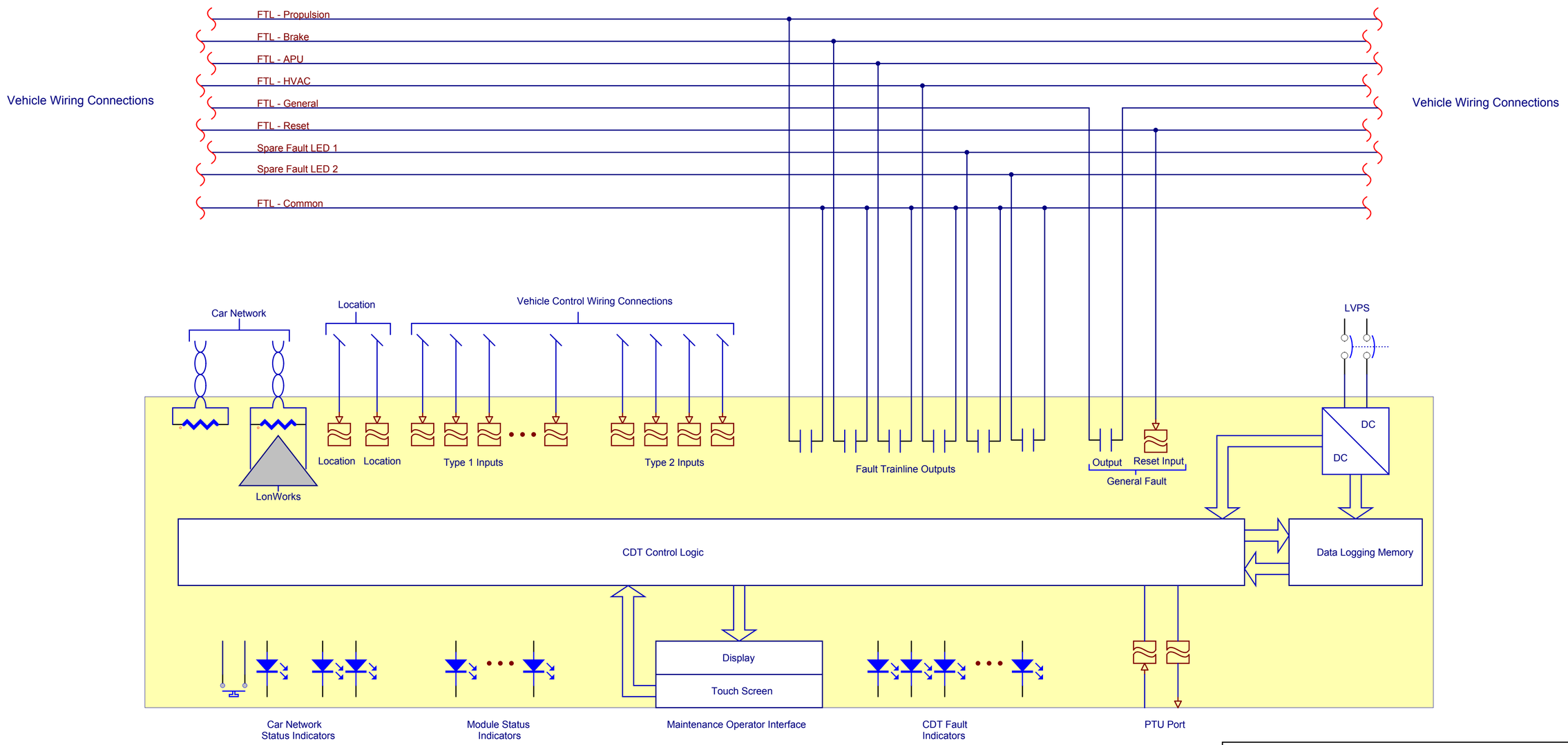

Quester Tangent Corporation
6582 Bryn Road
Saanichton, B.C., Canada V8M 1X6
Tel: (250) 656-6677 Fax: (250) 655-4696
http://www.questertangent.com

Product Name
Fault Trainline Schematics

Part Number

Drawing
Schematic

Sheet
Central Diagnostic Terminal Connections

DRAWN BY	CHECKED BY	APPROVED BY	DATE
SWD	CL	GN	23-Sept-2011

SHEET SIZE	DRAWING NO.	REV	SHEET
B	DSC-0432-1500	R00	3 OF 3

REVISION HISTORY

REV	REF (CN#)	DESCRIPTION	DATE	DWN BY	APV'D
R00	0432-001	FDR Release	23-Sept-2011	SWD	GN

Copyright © Quester Tangent Corporation. Confidential document. All rights reserved. This document and its contents are the property of Quester Tangent Corporation and shall be used only as authorized in writing.

DSQ-QSQT-0418-R05