120 mm sq.

San Ace 120L

38mm thick (9LB type)
38mm thick (9GL type)

General Specifications

- Material ····· Frame: Aluminum,
  Impeller: Plastics (Flammability: UL94V-1)
- Expected Life ····· Refer to specifications (L10:Survival rate: 90% at 60℃ , rated voltage, and continuously run in a free air state)
- Lead Wire ····· ⊕red ⊖black or blue (Sensor) yellow
- Storage Temperature ···−30℃ to +70℃ (Non-condensing)

120×120×38mm 〔Mass : 370g〕 9LB type

Specifications

The following nos. **have pulse sensors.**

Model No.	Rated Voltage [V]	Operating Voltage Range [V]	Rated Current [A]	Rated Input [W]	Rated Speed [min⁻¹]	Max. Airflow [m³/min]	Max. Airflow [CFM]	Max. Static Pressure [Pa]	Max. Static Pressure [inchH₂O]	SPL [dB(A)]	Operating Temperature [℃]	Expected Life [h]
9LB1212H101	12	10.2 to 13.8	0.39	4.68	2,600	2.9	102.4	67.62	0.272	39	− 20 to + 70	200,000
9LB1212M101			0.22	2.64	2,000	2.2	77.7	42.14	0.169	32		
9LB1224S101	24	20.4 to 27.6	0.46	11.04	3,500	3.88	137.0	120.8	0.485	48		100,000
9LB1224H101			0.19	4.56	2,600	2.9	102.4	67.62	0.272	39		200,000
9LB1224M101			0.11	2.64	2,000	2.2	77.7	42.14	0.169	32		
9LB1248H101	48	40.8 to 55.2	0.11	5.28	2,600	2.9	102.4	67.62	0.272	39		
9LB1248M101			0.06	2.88	2,000	2.2	77.7	42.14	0.169	32		

Some models can also be equipped without sensors or with PWM control functions as an option. Please refer to the index (pp. 417 to 437).

Dimensions (unit : mm)

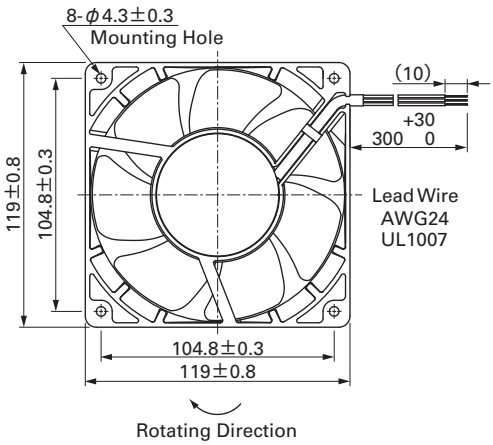

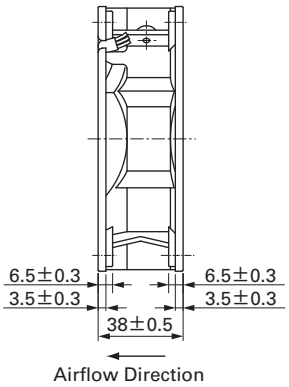

Reference Dimension of Mounting Holes and Vent Opening (unit : mm)

Inlet side

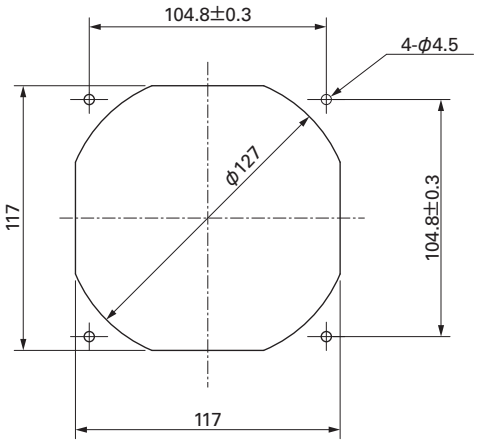

Outlet side

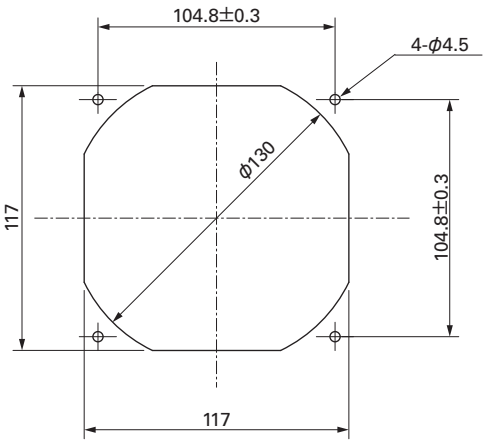

Options (unit : mm)

Finger Guards

Model : 109-019C Surface treatment : Nickel-chrome plating (silver) Color
: 109-019H : Cation electropainting (black)

Outlet side

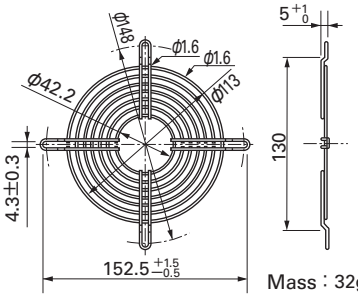

Mass : 32g

Model : 109-019E Surface treatment : Nickel-chrome plating (silver) Color
: 109-019K : Cation electropainting (black)

Inlet side, Outlet side

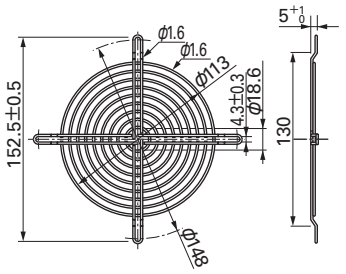

Mass : 42g

Resin Finger Guards

Model : 109-1000G

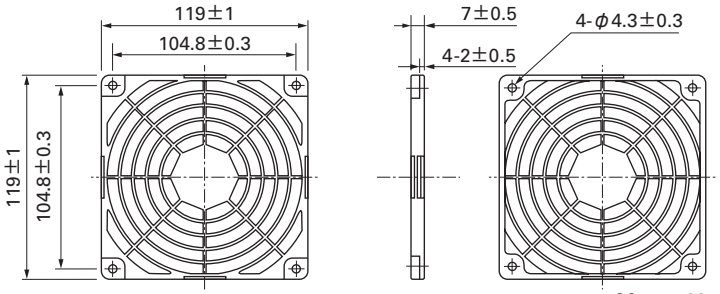

Mass : 23g

Resin Filter Kits

Model : 109-1000F13 (13PPI), 109-1000F20 (20PPI)
: 109-1000F30 (30PPI), 109-1000F40 (40PPI)

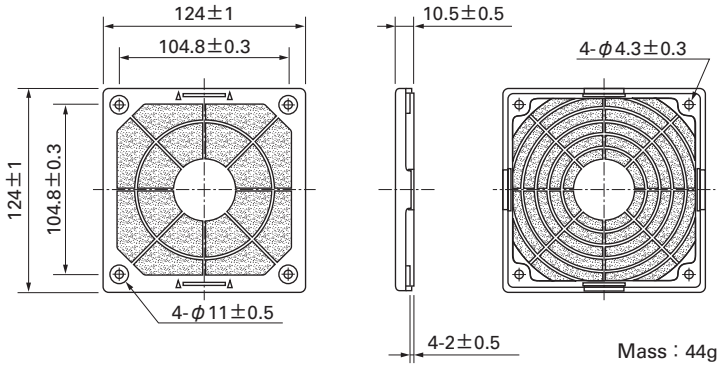

Mass : 44g

Airflow - Static Pressure Characteristics

H speed

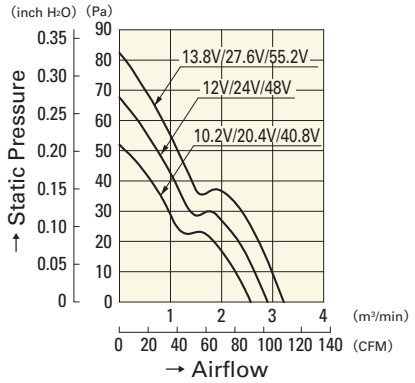

9LB1212H101
9LB1224H101
9LB1248H101

M speed

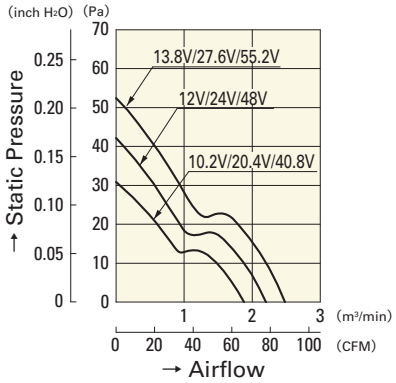

9LB1212M101
9LB1224M101
9LB1248M101

S speed

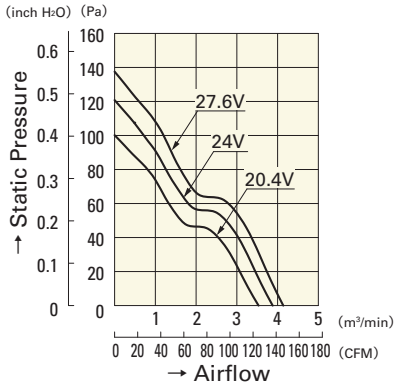

9LB1224S101