전윤수

보낸 사람: 이경락 [kyungrac@hyundai-rotem.co.kr]
보낸 날짜: 2011년 2월 22일 화요일 3:00
받는 사람: 유영준; 김대성; 김경식; 전윤수
참조: 김종년
제목: FW: Denver Rotem On-Board PTC and Communications Interfaces
첨부 파일: DTP-Rotem-On-Board-PTC-Comms-Technical-Scope-21Feb2011.docx

안녕하세요.

지난 전화 협의 이후, Wabtec의 관련 회신 및 업체의 수정된 proposal입니다. 참조 바랍니다.

신호팀 담당은 하기 및 첨부 내용 확인해서 차량과의 Interface 사항에 변경(SEPTA 대비)에 대해 확인하고 Wabtec에 관련 내용 회신 바랍니다.

이경락 드림

KR Lee
(KyungRak Lee)
Senior Research Engineer
Electric System Design Team #1 / R&D Center
Hyundai Rotem Company
E-Mail: kyungrac@hyundai-rotem.co.kr
Tel: +1 303 861 6864

From: RKull@Wabtec.com [mailto:RKull@Wabtec.com]
Sent: 2011-02-22 (화) 00:28
To: Fauvelle.R@interfleetinc.com; Peter.Strange@dtpjv.com; Jack.Buckingham@dtpjv.com; 이경락; 김종년; N.Tehrani@xorail.com
Cc: Heald.C@interfleetinc.com
Subject: Denver Rotem On-Board PTC and Communications Interfaces

All,

Attached is an updated Wabtec On-Board PTC and Communications Scope Technical Proposal, which addresses issues as discussed in our conference call last Thursday.

This includes an updated block diagram to show the Rotem supplied Ethernet trainline network and communications rack. The communications rack is interfaced to the Ethernet network which supports all audio, CCTV, and data communications between cars as well as off-board over the WiMax, WiFi, and cellular data radio paths. This should eliminate the need for any analog audio or CCTV trainlines between cars.

In the previous discussions, Rotem had agreed to have CCTV and passenger emergency interphone systems operate over Ethernet. On Thursday, Rotem advised they had planned PA functions to remain as analog, and interfaced to the 700 MHz train radio. Concern was expressed of latency issues associated with operating PA functions over the data network. Wabtec does not believe there are any significant latency issues. Very good performance can be obtained with total network latency kept under 150 ms. The audio codex only takes on the order of 30 ms latency. This is in the same range as the 700 MHz voice radio (which is digital, per APCO 25 and has similar coding latency).

I suggest the key issue is if DTP wants PA functions to come over the 700 MHz voice radio network, or as part of the wide area broadband network. If the PA functions between on-board and office are to be over the 700 MHz voice network, it will be best to keep this as an analog interface on-board, which appears to be what Rotem has provided for SEPTA. If these functions are to be part of the broadband data network (along with CCTV), it will make more sense for the on-board architecture to also be IP based, as Wabtec has recommended.

Regards,
Bob Kull

From: Robert Fauvelle [mailto:Fauvelle.R@interfleetinc.com]
Sent: Thursday, February 17, 2011 7:24 PM
To: Peter.Strange@dtpjv.com; Kull, Robert; Jack Buckingham; kyungrac@hyundai-rotem.co.kr; JN Kim; Tehrani, Nima
Cc: Chris Heald
Subject: ATC/PTC Conference Call Notes

Thank you to all for a productive conference call.

Some notes that I compiled:

- The "TM" on the block diagram represents the speed sensor/axle generator needed for the event recorder and PTC systems.
    - The PTC system can possibly share the speed signal with the event recorder.
        - ACTION: J.N. to send details of the event recorder speed signal input to Bob Kull for review. Of note, the speed signal needs to be active.
- A second brake pipe pressure transducer (BPPT) needs to be added to the Bach Simpson Air Manifold Unit to be used as an input to the PTC system.
    - If a second BPPT can't be added to the unit, it can be mounted separate from the unit.
- The Penalty Cut-Out Switch could be supplied by Wabtec or Hyundai Rotem. It is Hyundai Rotem's decision.
    - The switch is an electrical switch and should have a seal to prevent tampering.
- The EMU has only one brake rate for penalty or emergency brake applications – 3.0 mphps.
- ACTION: Bob Fauvelle & Peter Strange to talk to DTO about having PTC horn monitoring and control. What about the bell for quiet zones?
- The pressure signals and propulsion signals could possibly be sent to the PTC system through the event recorder by Ethernet.
- DTS/DTC prefers that communications to the Passenger Emergency Intercom from the OCC happen through WiMAX, not the radio. HR was concerned about time gaps but DTS/DTC/Wabtec didn't think it would be an issue.
    - ACTION: HR to investigate whether a VOIP converter can be added as an interface between the Ethernet signal and the analog signal.
    - ACTION: Bob Kull to provide a flow chart for this communication.

Bob

****
Interfleet Technology Inc

Interfleet Technology's email disclaimer is found via the following
URL: http://www.interfleet-technology.com/disclaimer.asp

Registered Offices:
http://www.interfleet-technology.com/offices.asp
****

This email and any attachments are only for use by the intended recipient(s) and may contain legally privileged, confidential, proprietary or otherwise private information. Any unauthorized use, reproduction, dissemination, distribution or other disclosure of the contents of this e-mail or its attachments is strictly prohibited. If you have received this email in error, please notify the sender immediately and delete the original.

Wabtec On-Board PTC and Communications Scope Technical Proposal for Denver Transit Partners Rotem Vehicles – Rev. 1

R. Kull - 21 February 2011

This document is to follow-up meetings with DTP and Rotem on 10 February in Denver to define the proposed Wabtec PTC and communications sub-systems supply scope, and interfaces to Rotem supplied systems. This updated revision follows the DTP-Rotem conference call on 17 February.

Refer to the block diagram below. The black portions represent the proposed Wabtec supply scope to Rotem, and the red portions are to be supplied by Rotem or other suppliers.

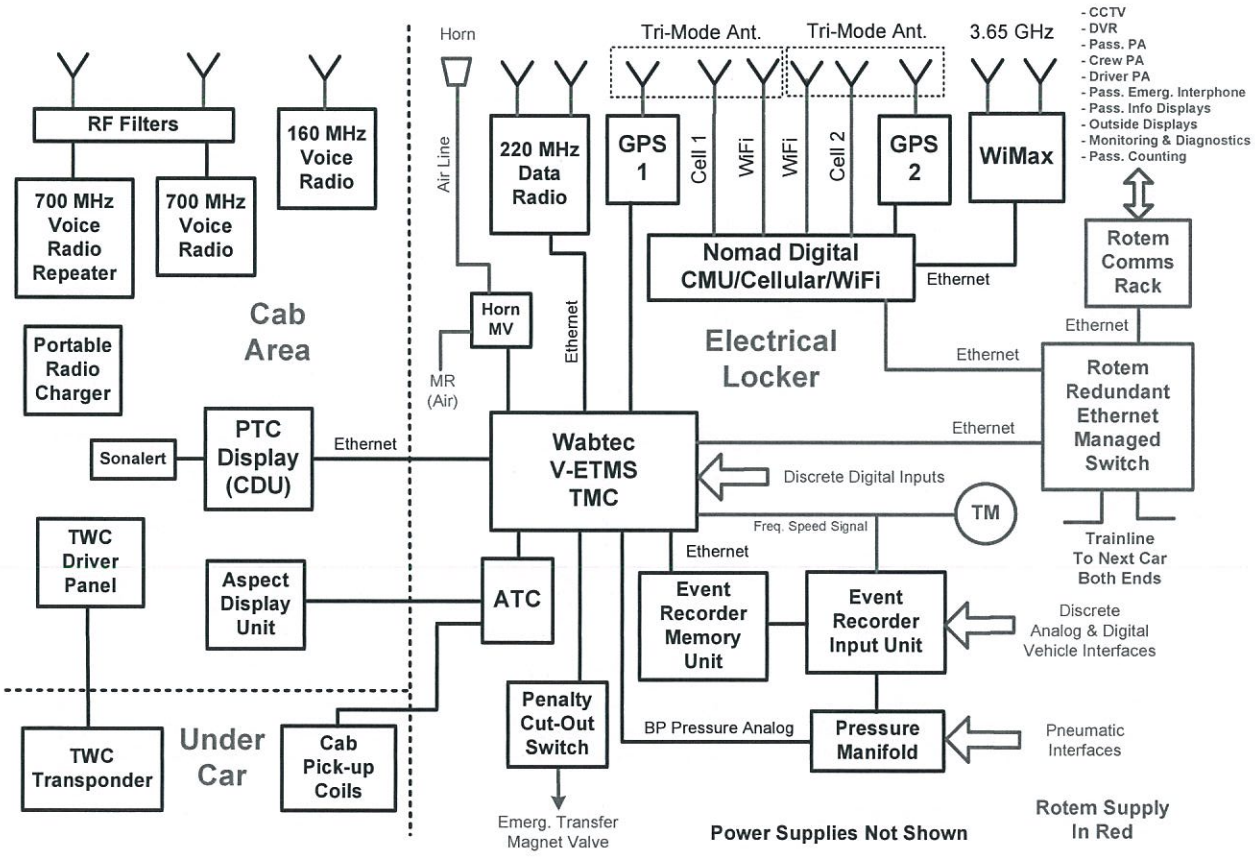

Notes:

1. Wabtec proposes to supply all roof mounted antennas, with Rotem to supply the roof mounting plates (if required), and coax cables from the antennas to communications hardware. These will use standard coax cable and RF connectors, to be defined by Wabtec during the design.

2. Wabtec and Rotem will need to work jointly to determine final selection, locations and mounting details for all antennas. Note that Wabtec expects to use "Tri-Mode" antennas for cellular, WiFi and GPS to reduce the number of separate antenna packages. In this example, there will be a single roof mount antenna package, with 3 separate antenna coax connections for each "Tri-Mode" antenna.

3. GPS data for PTC will be available on the Ethernet network, and can be used by other Rotem sub-systems. The GPS #1 unit is planned to include inertial sensors to support the V-ETMS TMC location determination sub-system in areas with loss of GPS. The GPS #2 unit will be interfaced to the Nomad Digital Communications Management Unit (CMU), and will also be available over the Ethernet network for use by other vehicle sub-systems.

4. Wabtec proposes to supply all cables for connection between Wabtec supplied hardware, except for the coax antenna cables as referenced in Note 1. The cable lengths will need to be determined with Rotem during the design process. Where required for routing in conduits, some of the cable assemblies may be with one end un-terminated, with connector kits for Rotem termination during the installation process.

5. Wabtec scope will include providing all power supplies and related circuit breakers as needed to support the systems, to operate from the Rotem nominal 37.5 VDC battery system. These circuit breakers can be supplied as a separate panel, or integrated to the Rotem circuit breaker panel, if desired.

6. Equipment locations are shown in three groups:
    a. Cab Area: To be integrated to the Rotem driver cab design.
    b. Electrical Locker: Suggested to be in one location, with Rotem design of mechanical mounting. This locker needs to have air ventilation for cooling. This is suggested to replace the space used by the Alstom ACSES package on the SEPTA car design.
    c. Under Car: Cab signal pick-up coils mounted in front of the axle, within defined dimensions to each rail. The TWC transponder is recommended to be mounted in the same area as the ACSES transponder antenna on the SEPTA car design.

7. The PTC display unit (CDU) is dedicated for PTC functions. The standard CDU (10.4" LCD) will be provided, with installation drawings provided separately. The sonalert and interface cable is

provided as an assembly for Rotem installation. Rotem will provide the video display, and there is no integration between these display functions.

8. RTD train alerter requirements are being provided separately by Rotem, and are not integrated to the PTC system.

9. The data communications network which will be shared for PTC and multiple on-board functions are:
    a. WiMax: This is planned for coverage over the mainline.
    b. WiFi: This is planned for coverage in selected areas, such as terminals.
    c. Cellular (2 carriers): This is planned as back-up in event of WiMax failures, but can also be considered in the future for increasing bandwidth capacity. Consideration will be given to support future LTE based 4G services being planned by Verizon and AT&T.

10. The 220 MHz data radio is dedicated for PTC only functions, and is not planned to support other on-board functions.

11. The Rotem supplied sub-systems requiring off-board communications will all be supplied by the Ethernet interface, and will be IP based. This includes the following sub-systems:
    a. Passenger Audio – access from Driver, Crew, and Control Office
    b. Passenger Information Interphone
    c. Front and Side Destination Indicators
    d. Passenger Information Indicators
    e. Monitoring and Diagnostic System
    f. CCTV Cameras
    g. Digital Video Recorder
    h. Passenger counting system

    Note that all audio interactions between these sub-systems and the control office will be over the data radio network (WiMax, WiFi and back-up cellular), using Voice over IP (VoIP). All audio sub-systems need to follow the same set of VoIP and audio codec standards. Wabtec suggests using the open codec standard of G729AB, but this can be finalized with Rotem during the design process. Total network and coding latency will be maintained less than 150 ms. Likewise, a standard needs to be selected for digital video transmissions between on-board and office systems. This is suggested to follow H.263v3 standards.

12. The Rotem supplied Ethernet trainline will connect by hardware between married pairs, and also between trains through the coupler. This requires support of data communications between all car sub-systems in the entire train. Redundancy is required in the Rotem supplied Ethernet switches and trainline cabling plan to protect against single point failures. This architecture will allow IP based communications resources on the entire train to be shared, and will support:

a. Digital communications resources on each car provide redundant off-board data communications capabilities.
b. Vehicle sub-system status information from each car is available to the lead car.

13. The Event Recorder system consists of three hardware packages:
    a. Event Recorder Memory Unit: This provides 8 GB of crash hard memory, with an Ethernet interface to the V-ETMS TMC, and serial interface to the Event Recorder Input Unit. All data, including both RTD specified vehicle data and FRA specified PTC data is integrated in the same memory. This is available for downloading by a local Ethernet port, and over the wireless data network, by the vehicle Ethernet network.
    b. Event Recorder Input Unit: This provides all of the discrete digital, analog, and frequency inputs as provided in the Bach-Simpson recorder as being planned by Rotem. The identical electrical interfaces as in the Bach-Simpson 54000 series event recorder are planned.
    c. Pressure Manifold: Pressure transducers are provided in a manifold, for interface to the Event Recorder Input Unit.

14. Event recorder data is networked to the V-ETMS TMC, to provide real time braking and traction status information used for PTC predictive braking calculations. Key data is also interfaced directly to the V-ETMS TMC to provide redundant inputs. Preliminary plans are for this to include:
    a. Brake Pipe Pressure Transducer: Additional sensor in the Pressure Manifold.
    b. Digital Inputs, Battery Voltage: Forward/Reverse, Cab Active, Brakes Cut-in/out.

    None of these inputs require any additional Rotem vehicle interfaces over what is already being planned to meet the RTD event recorder requirements.

15. Speed inputs are required, and can be shared as inputs to the event recorder and PTC systems. This can be from an axle generator, or a traction motor gear sensor, to be determined by Rotem.

16. The PTC and ATC systems are integrated to the V-ETMS Train Management Computer (TMC) with a single penalty brake interface, which will be at an emergency brake level. A Penalty Switch Cut-out unit is provided as the interface between the V-ETMS TMC and the penalty brake magnet valve. The Wabtec Transit Division (WTD) brake system as being supplied separately includes an "Emergency Transfer Magnet Valve" (EMTMV) to support this interface.

17. The V-ETMS TMC also provides interfaces to automate the horn operation, to follow highway crossing rules. Driver action is monitored for rule compliance, and the TMC will automate the horn activations in the event of driver inaction. A horn magnet valve is provided for electrical activation from the TMC of the pneumatic horn. Horn activation is included in the event recorder, and read to the TMC.

18. The Train Wayside Communications (TWC) system is based upon a driver panel and under vehicle transponder. This system is not integrated to PTC or the communications networks.

19. Voice radios are not integrated to the PTC, trainline PA, or Ethernet networks. Notes on the voice radio components:
    a. 700 MHz voice mobile: P25 standard, with the control head integrated to the radio, with a built-in speaker and separate hand held microphone.
    b. 700 MHz repeater: This also included user controls to be mounted in the cab area.
    c. 700 MHz RF Filters: This is to support the in-band 700 MHz repeater functions, and can be located separately from the cab area, if desired. Details on this filter will need to be determined during the design process, and will vary as a function of antenna placement options and RTD frequency allocations.
    d. Portable radio charger: This is for holding a 700 MHz P25 portable radio, and charge the battery.
    e. 160 MHz voice mobile: This will be a conventional analog radio meeting railroad standards. It will also be provided with the control head integrated to the radio, with a built-in speaker and separate hand held microphone.
    f. Mounting of the voice radios needs to consider air openings to allow adequate volume of the built-in speakers of the voice radios. If required, external speakers could be supplied by Rotem as part of the driver cab design.

Rotem Vehicle Interface Summary

The sub-system supply approach as recommended results in the following summary of Rotem vehicle interface design issues:

1. Mechanical installation: Wabtec will separately provide mechanical installation drawings for known components, and space allocations for components to be selected or designed during the system design process. Rotem will determine equipment location, and will supply associated mounting shelves, racks, or brackets.

2. Interface cabling: Cabling between Wabtec provided components are to be designed and provided by Wabtec, based upon cable lengths to be determined after Rotem determines equipment locations. Cabling to be provided by Rotem is as illustrated, with Wabtec definition of connector details for interface to Wabtec supplied components.

3. Antennas: Wabtec will supply antennas, with Rotem supply of roof mounting hardware and coax cables to communications hardware. Wabtec and Rotem will need to jointly determine antenna locations as needed for performance and to avoid interference between communications sub-systems.

4. Power Supplies: Wabtec will provide all power supplies as needed to operate from the Rotem battery system. Circuit breakers as required for the Wabtec supplied sub-systems can be provided as a separate panel, or to be integrated to a Rotem power panel, if desired.

5. Digital and Analog Discrete Interfaces: The list of interfaces as needed to meet the RTD event recorder requirements will also meet the needs for interface to the V=ETMS TMC. Several of these will be parallel interfaced to both the recorder and TMC, but these will not require separate Rotem vehicle interfaces.

6. Pneumatic Brake Interfaces: The Pressure Manifold as required for the Event Recorder will have an additional Brake Pipe transducer as a redundant interface to the TMC. The penalty brake from the TMC will interface to the Penalty Brake Magnet Valve already provided in the Wabtec brake system.

7. Ethernet Interfaces: Wabtec will define the IP based messaging standards to be followed for each of the sub-system interfaces which will communicate over the Rotem supplied Ethernet vehicle and trainline networks.

Event Recorder Data Elements in RTD Specifications

As a reference, the list of RTD specifications for discrete vehicle interfaces to the event recorder, with notes on the signal source:

1. Distance: Derived from axle generator or traction motor sensor
2. Time/Date/Year Internal Default – Synchronized to GPS time
3. Direction/Forward Trainline - Digital
4. Direction/Reverse Trainline - Digital
5. Master Controller Position Handle Position Switch 1 - Digital
6. Master Controller Position Handle Position Switch 2 - Digital
7. Master Controller Position Handle Position Switch 3 - Digital
8. Master Controller Position Handle Position Switch 4 - Digital
9. Master Controller Position Handle Position Switch 5 - Digital
10. Brake Pipe Pressure Air Brake Monitoring - Analog from Pressure Manifold
11. Brake Cylinder Pressure Air Brake Monitoring – Analog from Pressure Manifold
12. Dynamic Brake Control Stand - Analog
13. Main Reservoir Pressure Air Brake Monitoring – Analog from Pressure Manifold
14. Emergency Brake Application (master controller) Air Brake Monitoring - Digital
15. Emergency Brake Application (other) Air Brake Monitoring – Analog from Pressure Manifold
16. Brakes Applied Summary Trainline Air Brake Monitoring – Analog from Pressure Manifold
17. Brakes Released Summary Trainline Air Brake Monitoring – Analog from Pressure Manifold
18. Headlights Switch Contact - Digital
19. Auxiliary Light Switch Contact - Digital
20. Horn Activation Switch Contact - Digital
21. Car Unit Number Local ID Plug - Digital
22. Traction Current Traction Current Monitoring - Frequency (4)
23. Tractive Effort Local Signal - Analog (4)

24. Alerter Acknowledgement Switch Contact - Digital
25. Alerter Penalty Local Signal - Digital
26. Alerter Alarm Local Signal - Digital
27. Cab Make-up A&B/A&D/F1&F2 Relay Contacts - Digital (2)
28. Door Closed Summary Trainline - Digital
29. Parking Brake Local Switch - Digital
30. Emergency Wheel Slide Deactivated Switch Contact - Digital
31. Cab Signal Aspect Local signals – Digital (Ethernet)
32. PTC Related Functionality Local signal Digital (Ethernet)
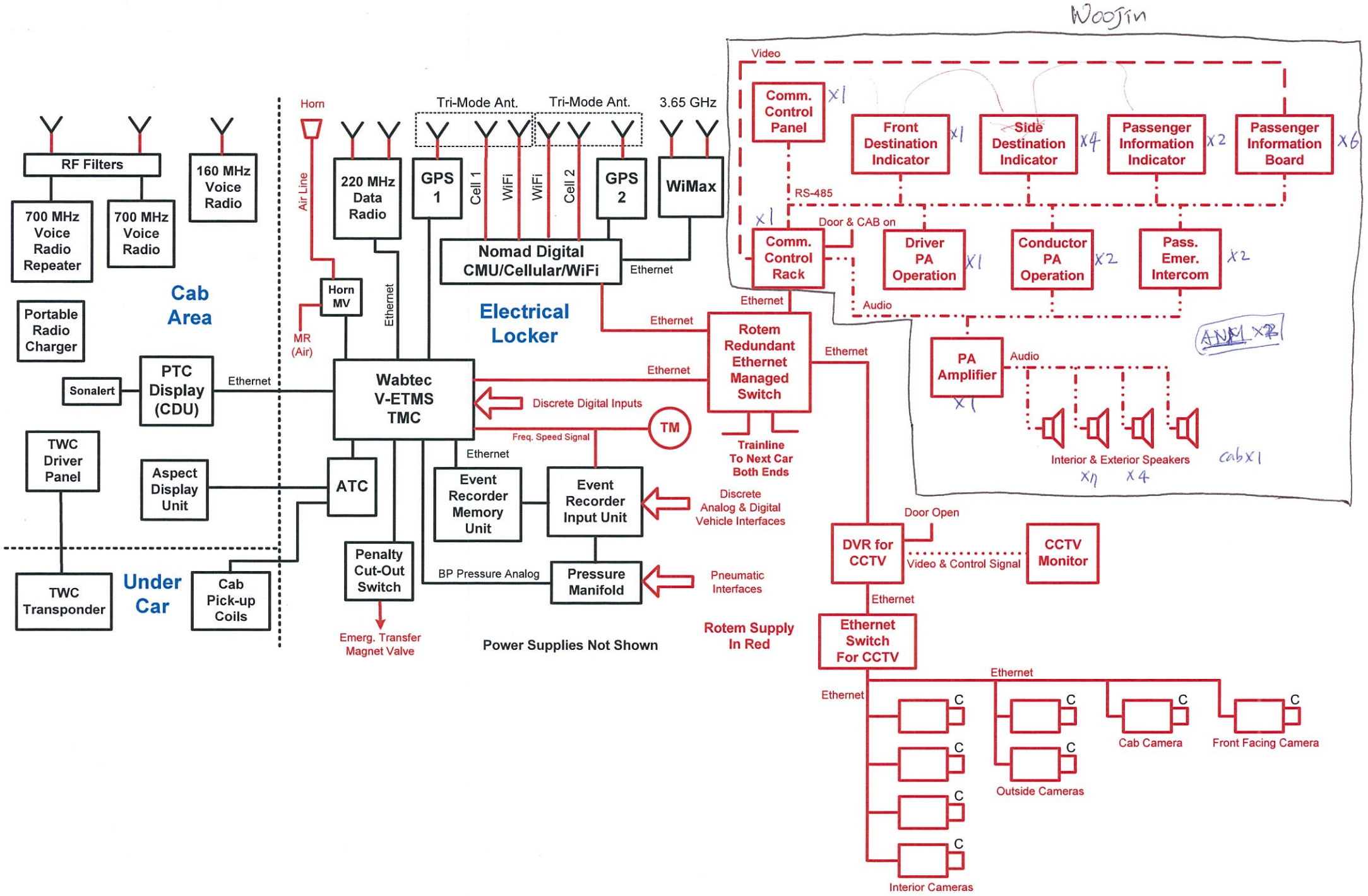
Hyundai Rotem|10.196.33.77|254096|2011-02-23 08:29:36