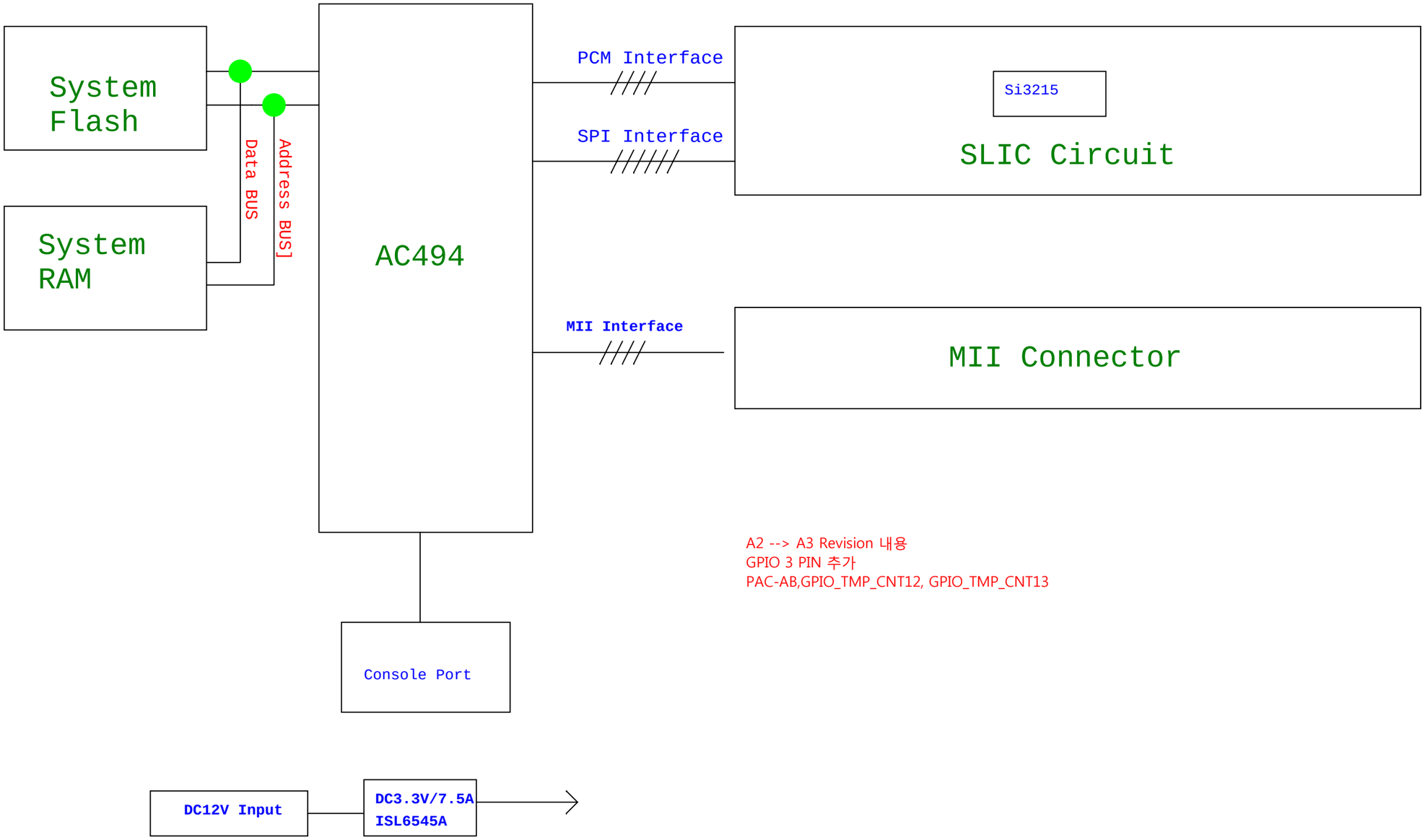

A2 --> A3 Revision 내용
GPIO 3 PIN 추가
PAC-AB,GPIO_TMP_CNT12, GPIO_TMP_CNT13

Classified Confidential Rank:A

WAVESYSCOM		
Title: VoIP Module		
Size: A3	Document Number: System Block Diagram	Rev: A3
Date: Wednesday, July 18, 2012	Sheet 1 of 7	

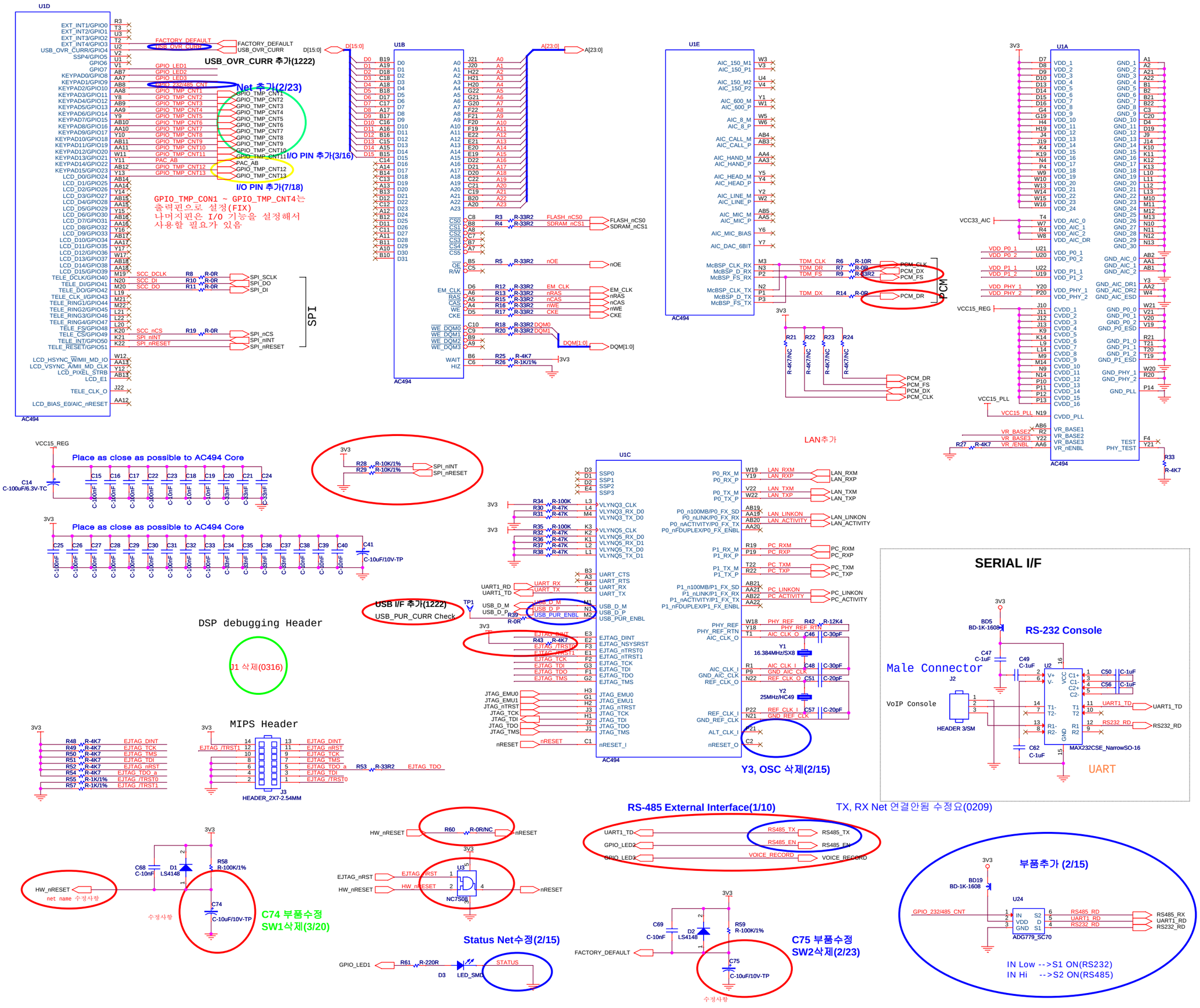
U1D
AC494
FACTORY_DEFAULT
USB_OVR_CURR
USB_OVR_CURR 추가(1222)
Net 추가(2/23)
I/O PIN 추가(3/16)
I/O PIN 추가(7/18)
GPIO_TMP_CON1 ~ GPIO_TMP_CNT4는
출력핀으로 설정(FIX)
나머지핀은 I/O 기능을 설정해서
사용할 필요가 있음
SPI
U1B
U1E
PCM
LAN추가
U1A
U1C
Place as close as possible to AC494 Core
DSP debugging Header
J1 삭제(0316)
USB I/F 추가(1222)
USB_PUR_CURR Check
MIPS Header
HEADER_2X7-2.54MM
Y3, OSC 삭제(2/15)
RS-485 External Interface(1/10)
TX, RX Net 연결안됨 수정요(0209)
SERIAL I/F
RS-232 Console
Male Connector
VoIP Console
HEADER 3/SM
MAX232CSE_NarrowSO-16
UART
C74 부품수정
SW1삭제(3/20)
net name 수정사항
수정사항
Status Net수정(2/15)
C75 부품수정
SW2삭제(2/23)
부품추가 (2/15)
ADG779_SC70
IN Low -->S1 ON(RS232)
IN Hi -->S2 ON(RS485)
Ferrite bead Place as close
to AC494 as Posssible
Classified Confidential Rank:A
WAVESYSCOM
Title
VoIP Module
Size A2
Document Number
AC494
Rev A3
Date: Wednesday, July 18, 2012
Sheet 2 of 7

NOR FLASH

FOR 4Mbit: R? REMOVED
FOR 8Mbit: R? INSTALLED

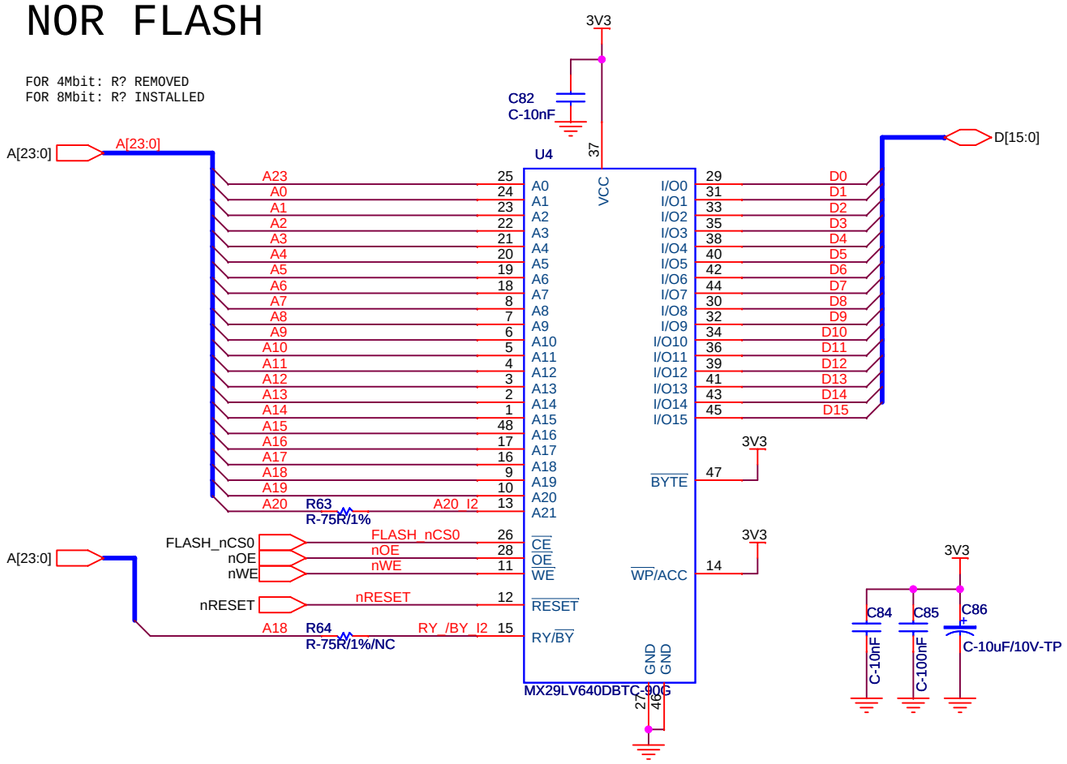

SDRAM

FOR 8Mx16bit: R? REMOVED
FOR 16Mx16bit: R? INSTALLED

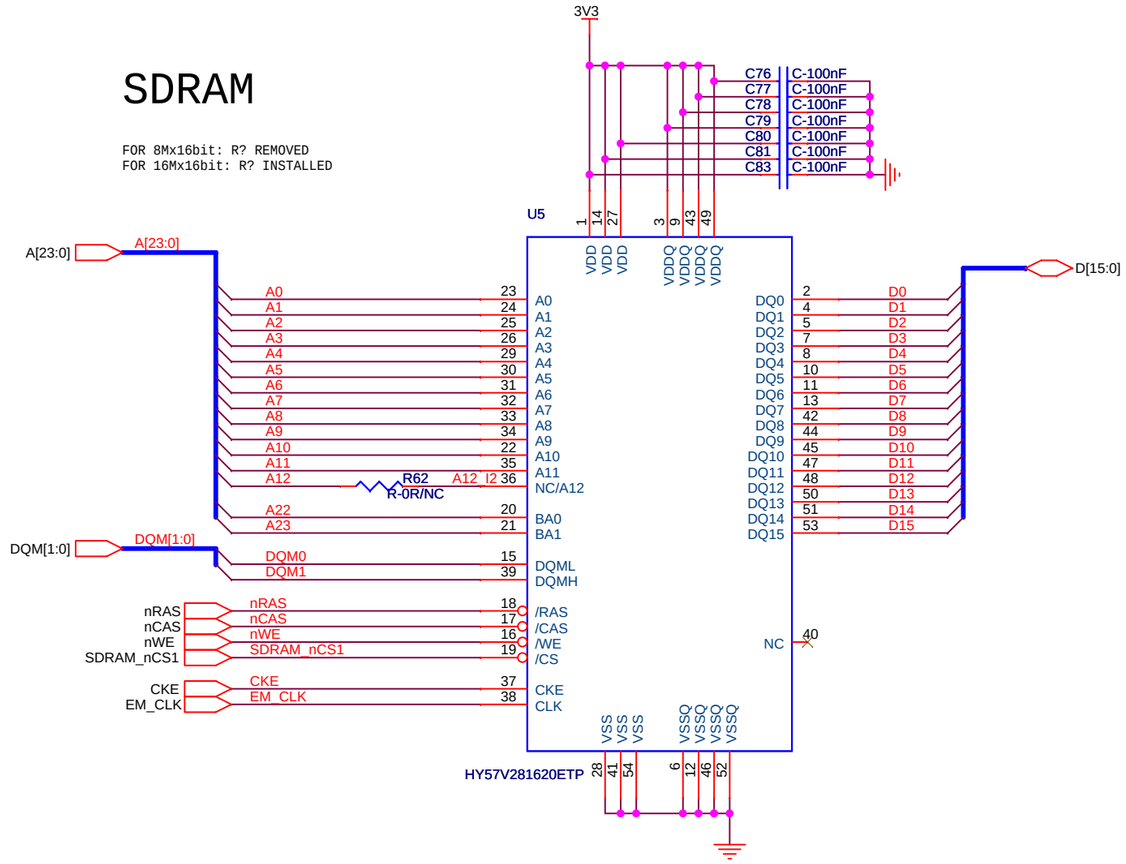

CONFIGURATION OPTIONS

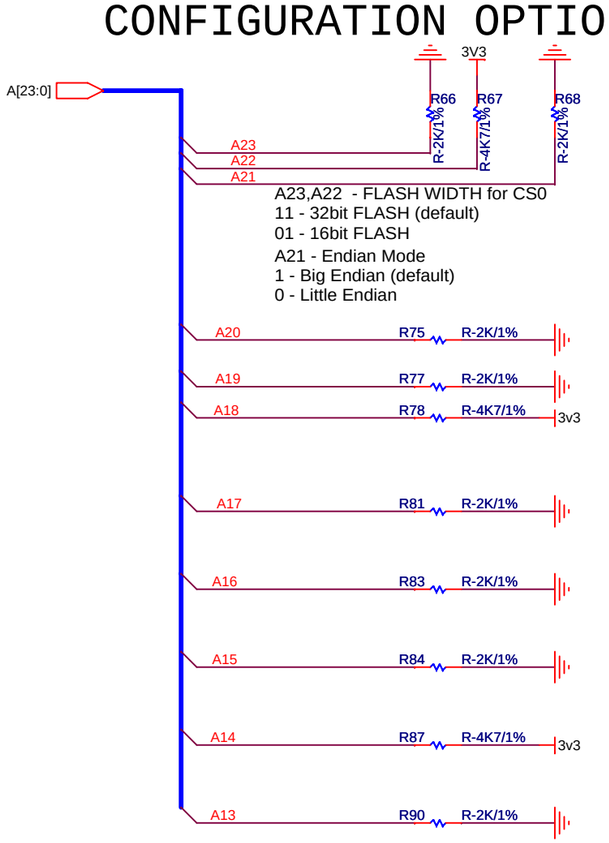

A23,A22 - FLASH WIDTH for CS0
11 - 32bit FLASH (default)
01 - 16bit FLASH

A21 - Endian Mode
1 - Big Endian (default)
0 - Little Endian

A20, A19, A18 - Boot Memory Location
111 - VLYNQ
110 - Serial EEPROM via SSP
101 - PLD_/CS5 (not valid)
100 - FLASH_/CS4
011 - SRAM_/CS3
010 - SDRAM_/CS1
001 - FLASH_/CS0 (default)
000 - Boot from internal 4K ROM

A17 -PLL Mode
1 - Bypass PLL (test mode)
0 - Use PLL (default)

A16 - Watch Dog Mode
1 - Watch Dog always Disabled
0 - Watch Dog may be Enabled (default)

A15 - Watch Dog Write Protect
1 - Watch Dog is write protected
0 - Watch Dog TIMER_ENABLE bit is active (default)

A14 - SDRAM Clock Mode
1 - SDRAM runs at full speed (default)
0 - SDRAM runs at half speed

A13 - SDRAM Initialization Mode
1 - Reduced SDRAM Initialization (test mode)
0 - Normal SDRAM Initialization (default)

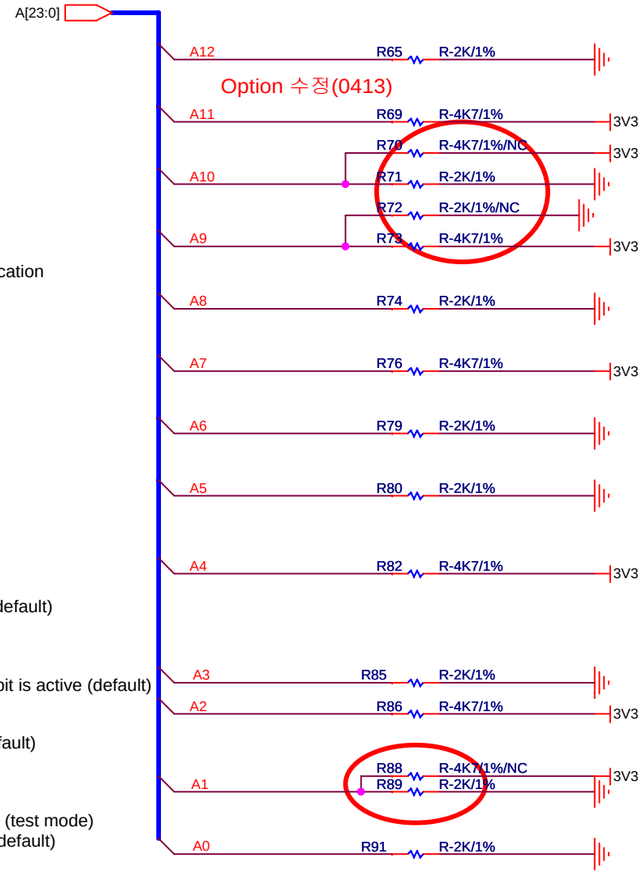

A12,A11 - VBUSP Clock Input Mux Select
11 - Internal MIPS PLL clock output
10 - Alternate Clock I/O
01 - Reference Clock I/O (default)
00 - AIC 20 Clock I/O

A10,A9 - USB Clock Input Mux Select
11 - Internal MIPS PLL clock output
10 - Alternate Clock I/O (default)
01 - Reference Clock I/O
00 - AIC 20 Clock I/O

A8,A7 - Ethernet PHY Clock Input Mux Select
11 - Internal MIPS PLL clock output
10 - Alternate Clock I/O
01 - Reference Clock I/O (default)
00 - AIC 20 Clock I/O

A6,A5 - DSP Clock Input Mux Select
11 - Internal MIPS PLL clock output
10 - Alternate Clock I/O
01 - Reference Clock I/O (default)
00 - AIC 20 Clock I/O

A4 - USB Mode
1 - HOST
0 - Device (default)

A3,A2 - MIPS Clock Input Mux Select
11 - Internal MIPS PLL clock output
10 - Alternate Clock I/O
01 - Reference Clock I/O (default)
00 - AIC 20 Clock I/O

A1 Option Board에서 Check

A1 - MIPS Clock Mode
1 - MIPS_CLK is asynchronous (default)
0 - MIPS_CLK is synchronous

A0 - Default Control
1 - Boot Config is default
0 - Boot Config is defined by A23:A0 (default)

Classified Confidential Rank:A

WAVESYSCOM		
Title: VoIP Module		
Size: A3	Document Number: 04 MEMORY	Rev: A3
Date: Thursday, July 19, 2012	Sheet 3 of 7	

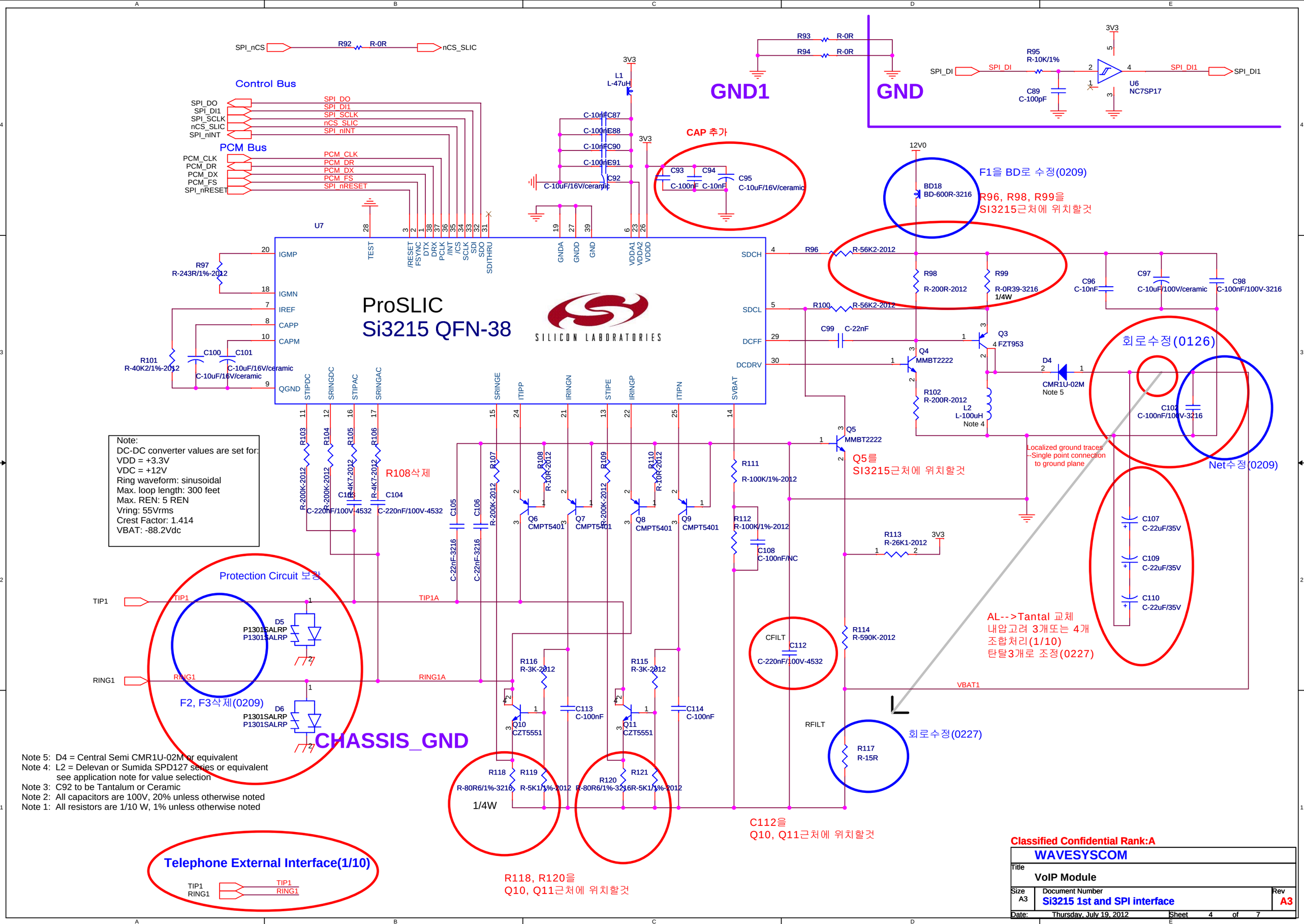
SPI_nCS
R92
R-0R
nCS_SLIC
Control Bus
SPI_DO
SPI_DI1
SPI_SCLK
nCS_SLIC
SPI_nINT
PCM Bus
PCM_CLK
PCM_DR
PCM_DX
PCM_FS
SPI_nRESET
3V3
L1
L-47uH
C-10nF C87
C-100nF E88
C-10nF C90
C-100nF E91
C92
C-10uF/16V/ceramic
CAP 추가
C93
C94
C95
C-100nF
C-10nF
C-10uF/16V/ceramic
GND1
GND
R93
R-0R
R94
R-0R
SPI_DI
R95
R-10K/1%
C89
C-100pF
U6
NC7SP17
SPI_DI1
12V0
F1을 BD로 수정(0209)
BD18
BD-600R-3216
R96, R98, R99을
SI3215근처에 위치할것
U7
ProSLIC
Si3215 QFN-38
SILICON LABORATORIES
IGMP
IGMN
IREF
CAPP
CAPM
QGND
TEST
/RESET
FSYNC
DTX
DRX
PCLK
/INT
/CS
SCLK
SDI
SDO
SDITHRU
GNDA
GNDD
GND
VDDA1
VDDA2
VDDD
SDCH
SDCL
DCFF
DCDRV
STIPDC
SRINGDC
STIPAC
SRINGAC
SRINGE
ITIPP
IRINGN
STIPE
IRINGP
ITIPN
SVBAT
R97
R-243R/1%-2012
R101
R-40K2/1%-2012
C100
C101
C-10uF/16V/ceramic
R96
R-56K2-2012
R100
R-56K2-2012
C99
C-22nF
R98
R-200R-2012
R99
R-0R39-3216
1/4W
C96
C-10nF
C97
C-10uF/100V/ceramic
C98
C-100nF/100V-3216
Q3
FZT953
Q4
MMBT2222
D4
CMR1U-02M
Note 5
R102
R-200R-2012
L2
L-100uH
Note 4
회로수정(0126)
C102
C-100nF/100V-3216
Net수정(0209)
Localized ground traces
--Single point connection
to ground plane
R103
R-200K-2012
R104
R-200K-2012
R105
R-4K7-2012
R106
R-4K7-2012
R108삭제
C103
C-220nF/100V-4532
C104
C-220nF/100V-4532
C105
C-22nF-3216
C106
C-22nF-3216
R107
R-200K-2012
R108
R-10K-2012
R109
R-200K-2012
R110
R-10K-2012
Q6
CMPT5401
Q7
CMPT5401
Q8
CMPT5401
Q9
CMPT5401
R111
R-100K/1%-2012
R112
R-100K/1%-2012
C108
C-100nF/NC
Q5
MMBT2222
Q5를
SI3215근처에 위치할것
R113
R-26K1-2012
3V3
R114
R-590K-2012
CFILT
C112
C-220nF/100V-4532
C107
C-22uF/35V
C109
C-22uF/35V
C110
C-22uF/35V
AL-->Tantal 교체
내압고려 3개또는 4개
조합처리(1/10)
탄탈3개로 조정(0227)
VBAT1
RFILT
R117
R-15R
회로수정(0227)
Note:
DC-DC converter values are set for:
VDD = +3.3V
VDC = +12V
Ring waveform: sinusoidal
Max. loop length: 300 feet
Max. REN: 5 REN
Vring: 55Vrms
Crest Factor: 1.414
VBAT: -88.2Vdc
Protection Circuit 보강
TIP1
TIP1A
RING1
RING1A
D5
P1301SALRP
P1301SALRP
D6
P1301SALRP
P1301SALRP
F2, F3삭제(0209)
CHASSIS_GND
R116
R-3K-2012
R115
R-3K-2012
Q10
CZT5551
Q11
CZT5551
C113
C-100nF
C114
C-100nF
R118
R-80R6/1%-3216
R119
R-5K1/1%-2012
R120
R-80R6/1%-3216
R121
R-5K1/1%-2012
1/4W
C112을
Q10, Q11근처에 위치할것
R118, R120을
Q10, Q11근처에 위치할것
Note 5: D4 = Central Semi CMR1U-02M or equivalent
Note 4: L2 = Delevan or Sumida SPD127 series or equivalent
see application note for value selection
Note 3: C92 to be Tantalum or Ceramic
Note 2: All capacitors are 100V, 20% unless otherwise noted
Note 1: All resistors are 1/10 W, 1% unless otherwise noted
Telephone External Interface(1/10)
TIP1
RING1
TIP1
RING1
Classified Confidential Rank:A
WAVESYSCOM
Title
VoIP Module
Size
A3
Document Number
Si3215 1st and SPI interface
Rev
A3
Date: Thursday, July 19, 2012
Sheet 4 of 7

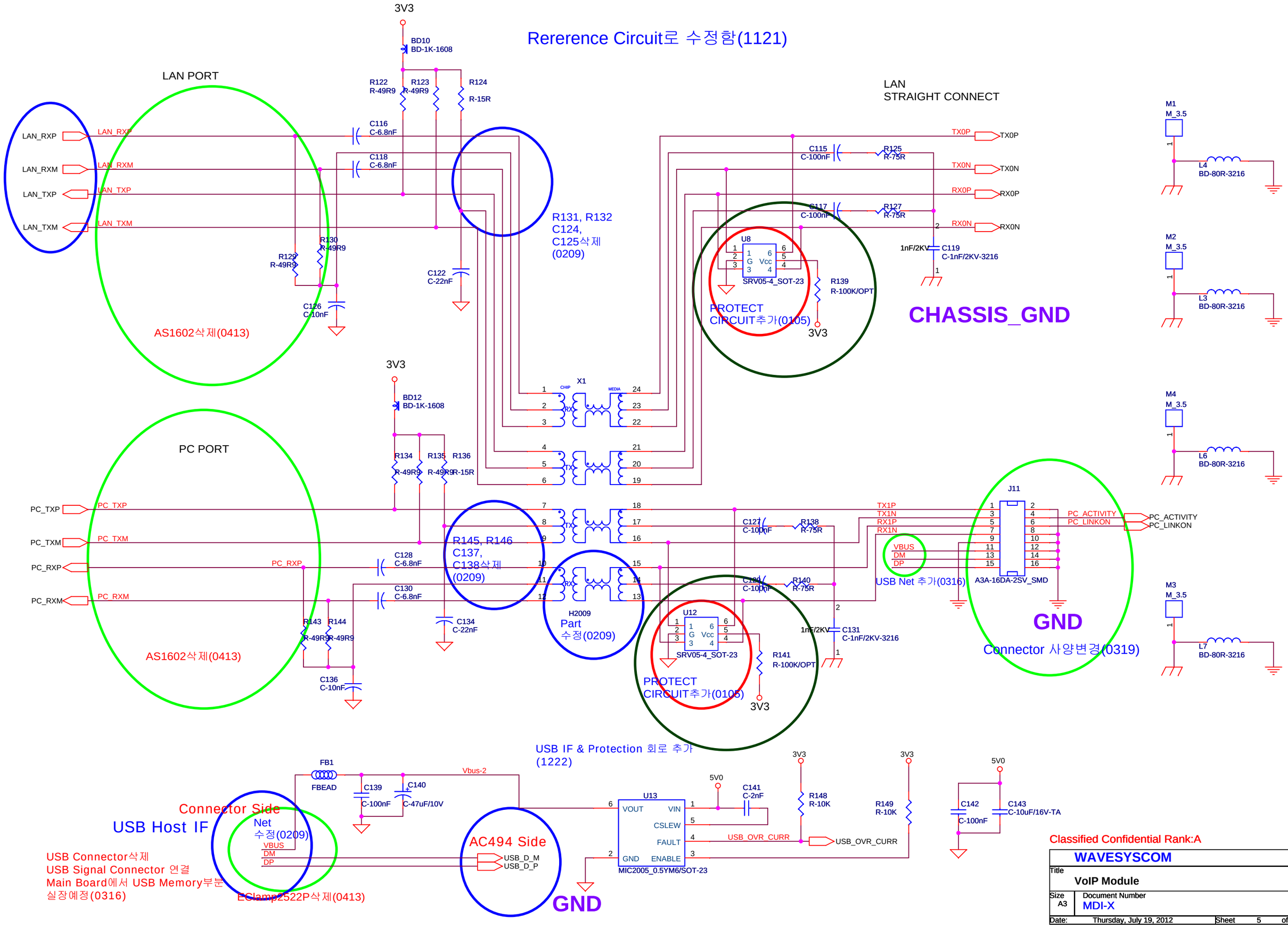

Classified Confidential Rank:A

WAVESYSCOM		
Title: VoIP Module		
Size: A3	Document Number: MDI-X	Rev: A3
Date: Thursday, July 19, 2012	Sheet 5 of 7	

Main POWER

Power (12V to 5.0V)

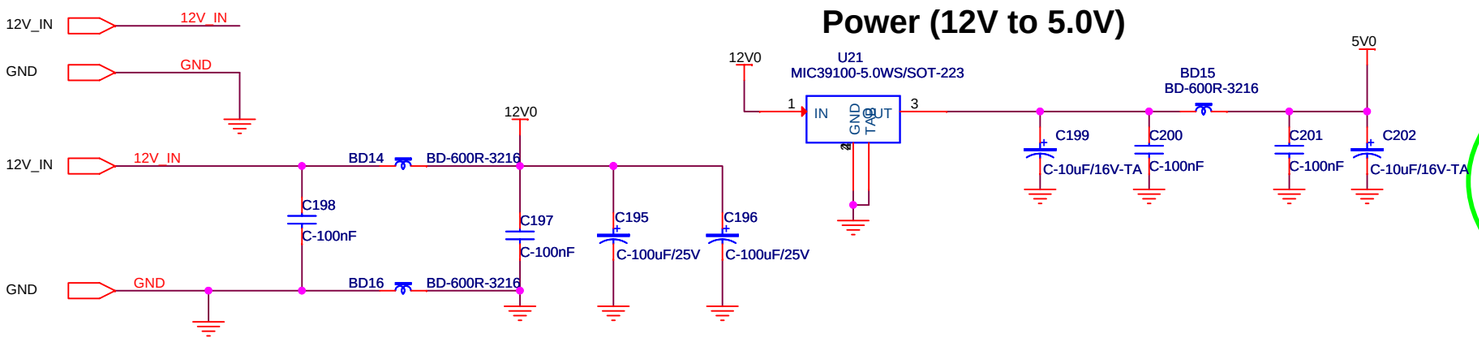

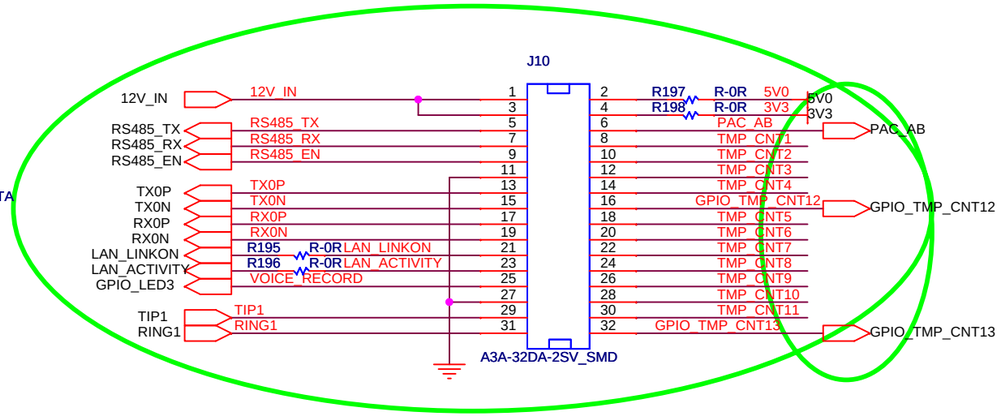

Connector사양 변경 (3/19)

NET추가 (7/19)

Power (12V to 3.3V)

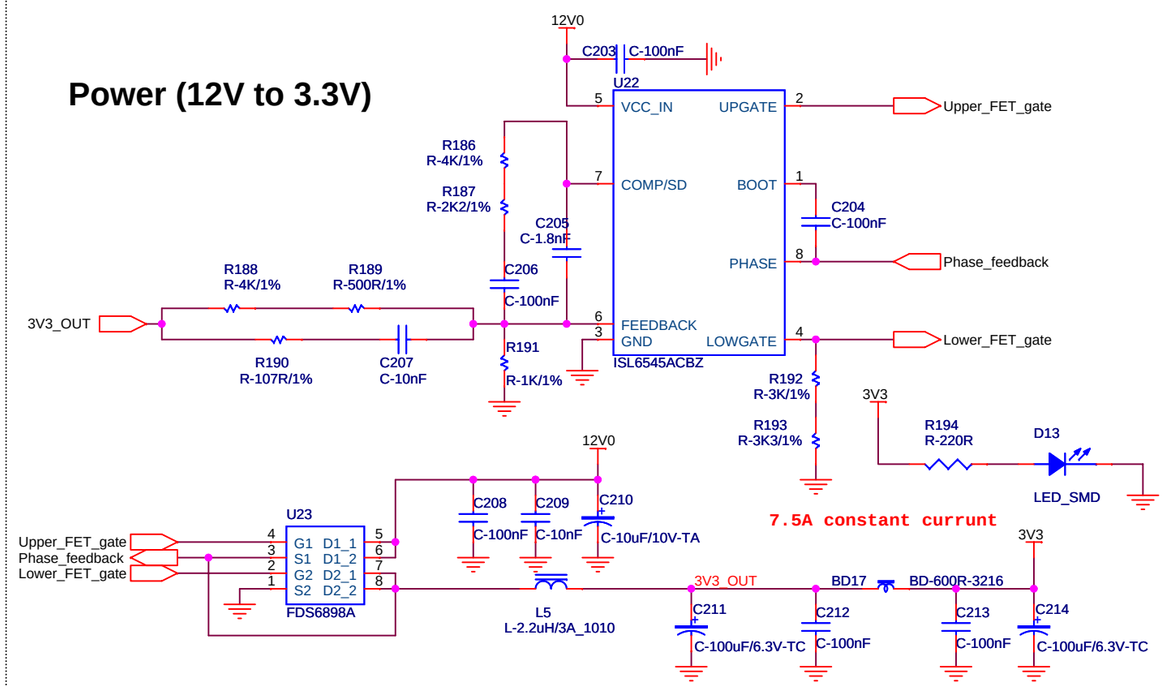

부품추가 (3/16)

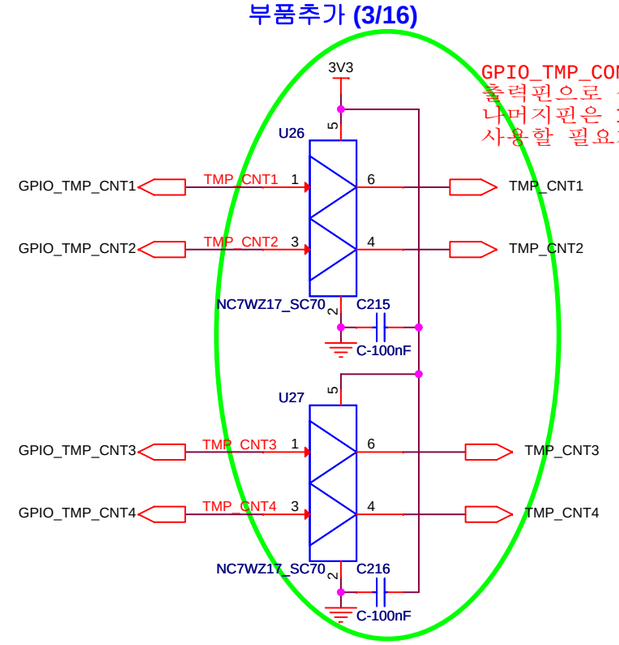

GPIO_TMP_CON1 ~ GPIO_TMP_CNT4는
출력핀으로 설정(FIX)
나머지핀은 I/O 기능을 설정해서
사용할 필요가 있음

NET추가 (3/16)

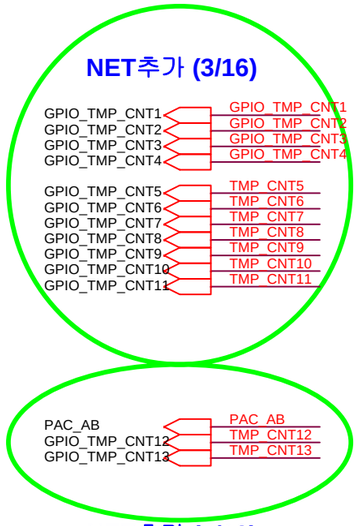

NET추가 (7/19)

12Volt External Interface(1/10)

RJ-45 WAN External Interface(1/10)

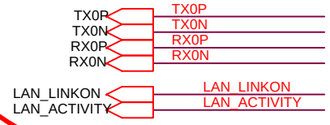

Telephone External Interface(1/10)

RS-485 External Interface(1/10)

Voice Recording LED External Interface(1/17)

Classified Confidential Rank:A

WAVESYSCOM	
Title	VoIP Module
Size	Document Number: Main Power_External Interface — Rev: A3
Date: Thursday, July 19, 2012	Sheet 6 of 6