NOTE.

1. BOLT TYPE DESCRIPSION
   (17) — Item no.
2. EMC TAPE LENGTH DESCRIPTION
   (18)-341mm — Length — Item no.
3. Non-assigned connector should be filled with plug & socket pins.

TECHNICAL DATA :

1. SPEAKER
   1) IMPEDANCE: 8ohm ±15%
   2) POWER RATING: 3W (MAX.5W)
   3) SOUND PRESSURE LEVEL: ~~86~~ 85dB±3dB
   4) RESONANCE FREQUENCY: ~~240~~ 250 ± 20%
   5) FREQUENCY RANGE: ~~0~20,000Hz~~ F0~15KHz
2. WEIGHT: 4kg
3. SURFACE TREATMENT
   1) ITEM: NO.1,2,13,16
      - COLOR: BLACK
      - COLOR CODE: UT-721N TOP N-1.5.G20
      - MAKER: PPG

NO.	TYPE	SIZE	Q'TY
17-1	FLAT HEAD BOLT	M3XL8	~~14~~ 18
17-2	ROUND HEAD BOLT	M3XL6	12
	SPRING WASHER	M3XØ5.5Xt0.8	
	FLAT WASHER	M3XØ5.8Xt0.5	
17-3	NUT	M4	4
	SPRING WASHER	M4XØ5.8Xt1.0	
	FLAT WASHER	M4XØ7.8Xt0.8	

X2: PIN ASSIGNMENT
ITH06F18-19SB0F6

NO.	ITEM
A	PAI+(fn)
B	PAI-(fn)
C	PAI SH(fn)
D	
E	
F	
G	
H	G MIC SH
J	G MIC+
K	G MIC-

X1: PIN ASSIGNMENT
ITH06F28-21SB0F6
~~ITH03FPA28-21PB0G1F6~~

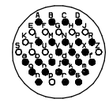

NO.	ITEM	NO.	ITEM
A	POWER1-VCC	a	OCC RX+
B	POWER1-GND	b	OCC RX-
C	LIVE	c	OCC SH
D	LIVE ADD GND(fn)	d	OCC TX+
E		e	OCC TX-
F		f	G-SM+
G		g	MUTE+
H		h	MUTE-
J		j	G-SM-
K		k	PAM+
L	PEI RX+(fn)	m	PAM-
M	PEI RX-(fn)	n	PAM SH
N	PEI SH (fn)	p	
P	PEI TX+(fn)	r	POWER VCC(DPA)
R	PEI TX-(fn)	s	POWER GND(DPA)
S			
T			
U			
V	DUAL TONE+(fn)		
W	DUAL TONE-(fn)		
X	DUAL TONE SH(fn)		
Z			

ITEM	DESCRIPTION	SPEC	DWG NO.			S/TREATMENT
1	FRONT PANEL	304SS,t=4.0	RID000373			PAINTING
2	DPO FRAME	A591-CO, t1.0	RID000050			PAINTING
3	SPEAKER	FMB4070-8-8N12,5CR AB1N4H2-8Q248-8H18A,8ohm,3W	RID000374			
4	VOLUME CONTROL	RV20YN-20F-B103K/TOCOS	RID001118			
5	ILLUMINATED SWITCHES	AV9SL09-489002/APEM	RID000382			
6	DPO CONTROL BOARD	ASSY,W15	RID000372			
7	POWER CONVERTER BOARD	Vicor,W15	RID000375			
8	CONNECTOR X1	ITH06F28-21SB0F6/GLENAIR				
9	CONNECTOR X1	ITH03FPA28-21PB0G1F6/GLENAIR				
10	CONNECTOR X2	ITH06F18-19SB0F6/GLENAIR				
11	CONNECTOR X2	ITH03FPA18-19PB0G1F6/GLENAIR				
12	WIRE MESH	304SS,SCREEN #30,Ø0.3	RID000450	-	01	
13	UPPER COVER	A591-CO , t1.2	RID000379			
14	NAME PLATE	AL,t=1	RID000452	-	08	
15	HAND MIC	KMC-30/KENWOOD	RID000381			
16	REAR COVER	A356-91 , t1.2	RID000376			PAINTING
17	BOLT & NUT LIST	ASSY				
18	EMC GASKET	SF050010R-C-NR-AL E-Song				
19	RUBBER GROMMET	EPDM, Ø19mm(0.75 inch)	RID000451			
20	SHEET	304SS,t=0.7	RID000450	-	03	
21	RUBBER SHEET	RUBBER	RID000377			
22	GROMMET BRACKET	A356-91,t=1.0	RID000452			PAINTING
23	DPO WIRING DIAGRAM	ASSY	RID000453			
24	RUBBER GROMMET	EPDM, Ø15mm(0.591inch)	RID000397			
25	CONNECTOR	SN-8-5(R) ~~RM3-8R~~				
26	CONNECTOR	SN-8-5(R.) ~~RM3-8RM~~				
27	CABLE CLAMP	BST-8,PA6,MISUMI				
28	CONNECTOR BRACKET	304SS,t1.5				

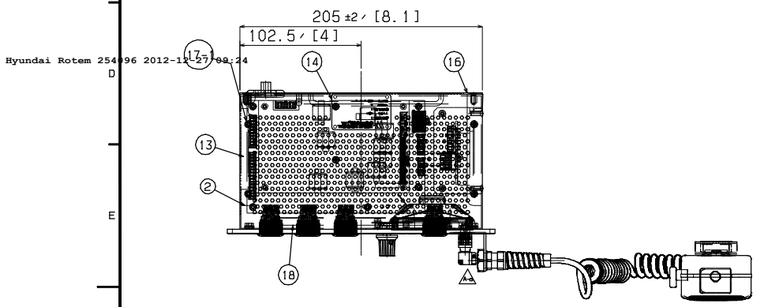

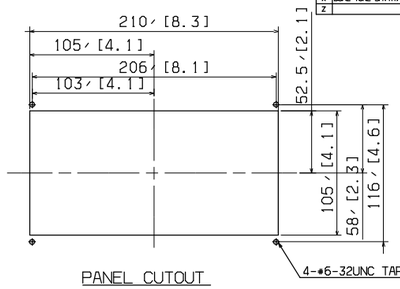

PANEL CUTOUT

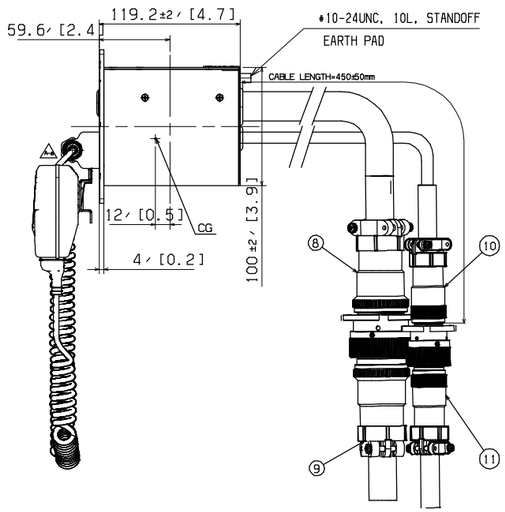

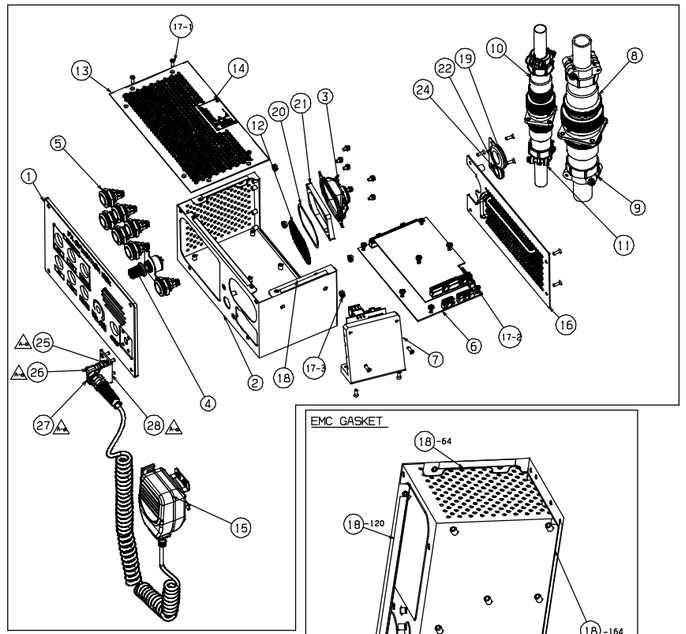

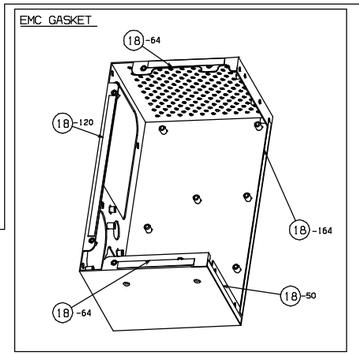

Fx1	2012.07.16	The supplier improved the connector.		Y.S.JEON	C.Y.LEE	S.H.PARK	Ax1	2011.08.10
Ex1	2012.03.15	The supplier revised the drawing.		Y.S.JEON	C.Y.LEE	S.H.PARK	Ax1	2011.08.10
Dx1	2012.01.05	The supplier revised painting spec.		Y.S.JEON	C.Y.LEE	S.H.PARK	Ax1	2011.08.10
Cx1	2011.11.25	The figure was changed for interference		Y.S.JEON	C.Y.LEE	S.H.PARK	Ax1	2011.08.10
Bx1	2011.10.25	The supplier revised the drawing for FDR		Y.S.JEON	C.Y.LEE	S.H.PARK	Ax1	2011.08.10
Ax1	2011.08.10	The MIC jack was changed by CUSTOMER		Y.S.JEON	C.Y.LEE	S.H.PARK		
Gx1	2012.11.01	The supplier added the item #25 ~ #28.	RNE1002-U144	Y.S.JEON	C.Y.LEE	S.H.PARK		

기호 MARK	일자 DATE	변경내역 DETAIL OF REVISION(E.C ZONE)	설변번호 E.C NO.	설계 DGN	검도 CHK	승인 APP	기호 MARK	일자 DATE	변경내역 DETAIL OF REVISION(E.C ZONE)	설변번호 E.C NO.	설계 DGN	검도 CHK	승인 APP

품번 NO.	부품 번호 PART NO.	품명 DESCRIPTION	재질 MATERIAL	수량 Q'TY	중량 W.T	비고 REMARKS
승인 APP	S.H.PARK 2011.03.25	제작 MAT'L ASSY				
검도 CHK	C.Y.LEE 2011.03.17	총중량 G.W 9.3 lbs				
설계 DGN	Y.S.JEON 2011.03.11	일반공차 MC WD CT B				
제도 DRG		SIZE D				

참고번호 REF. NO.

DIM. IN mm | SCALE 1 / 1 | DATE 2011.07.10 | DRAWN B.H.KANG | DESIGNED - | CHECKED J.Y.LEE | APPROVED B.J. JONE

DENVER RTD FASTRACKS

DRIVER PA OPERATING BOX

R1D1473-25854 | AD

TITLE: DRIVER PA OPERATION BOX

도면 번호 DRG. NO: RES14001CT0 | Ver. 00 | Rev. -G | RNE1002

MS | SCALE N/S | 매수 SHEET 1 of 1

HYUNDAI Rotem 현대로템주식회사

본 도면은 당사 재산으로서 승인없이 무단복사/배포 금지함. PROPERTY OF ISSUING ENTITY, CANNOT BE DISTRIBUTED OR REPRODUCED WITHOUT AUTHORIZATION.

CATIA

HYUNDAI ROTEM
Hyundai Rotem 254096 2012-11-27 09:24