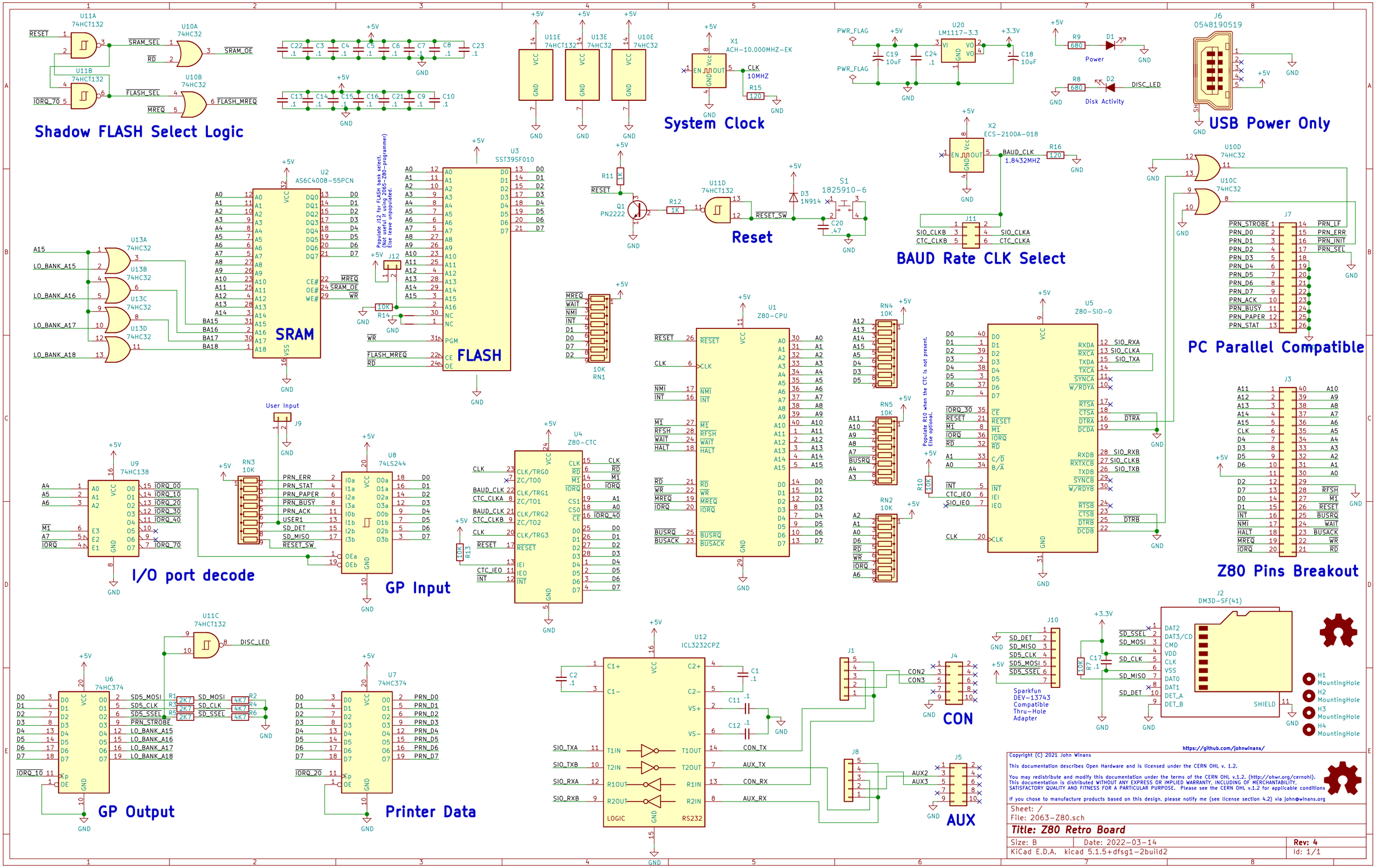
Shadow FLASH Select Logic
U11A 74HCT132
U11B 74HCT132
U10A 74HC32
U10B 74HC32
RESET
SRAM_SEL
RD
SRAM_OE
FLASH_SEL
MREQ
FLASH_MREQ
IORQ_70
System Clock
X1 ACH-10.000MHZ-EK
CLK 10MHZ
R15 120
U11E 74HCT132
U13E 74HC32
U10E 74HC32
USB Power Only
J6 0548190519
U20 LM1117-3.3
PWR_FLAG
C19 10uF
C24 .1
C18 10uF
+3.3V
R9 680
D1
Power
R8 680
D2
DISC_LED
Disk Activity
Reset
R11 1K
Q1 PN2222
R12 1K
U11D 74HCT132
RESET_SW
D3 1N914
S1 1825910-6
C20 .47
BAUD Rate CLK Select
X2 ECS-2100A-018
BAUD_CLK 1.8432MHZ
R16 120
J11
SIO_CLKB
CTC_CLKB
SIO_CLKA
CTC_CLKA
U10D 74HC32
U10C 74HC32
PC Parallel Compatible
J7
PRN_STROBE
PRN_D0
PRN_D1
PRN_D2
PRN_D3
PRN_D4
PRN_D5
PRN_D6
PRN_D7
PRN_ACK
PRN_BUSY
PRN_PAPER
PRN_STAT
PRN_LF
PRN_ERR
PRN_INIT
PRN_SEL
SRAM
U2 AS6C4008-55PCN
U13A 74HC32
U13B 74HC32
U13C 74HC32
U13D 74HC32
LO_BANK_A15
LO_BANK_A16
LO_BANK_A17
LO_BANK_A18
BA15
BA16
BA17
BA18
FLASH
U3 SST39SF010
Populate J12 for FLASH bank select. (Not useful if using 2065-Z80-programmer) Else leave unpopulated.
J12
R14 10K
WR
FLASH_MREQ
RD
RN1 10K
U1 Z80-CPU
RN4 10K
RN5 10K
RN2 10K
Populate R10 when the CTC is not present. Else optional.
R10 10K
U5 Z80-SIO-0
SIO_RXA
SIO_CLKA
SIO_TXA
DTRA
SIO_RXB
SIO_CLKB
SIO_TXB
DTRB
CTC_IEO
SIO_IEO
User Input
J9
U9 74HC138
I/O port decode
RN3 10K
PRN_ERR
PRN_STAT
PRN_PAPER
PRN_BUSY
PRN_ACK
USER1
SD_DET
SD_MISO
RESET_SW
U8 74LS244
GP Input
U4 Z80-CTC
CLK/TRG0
ZC/TO0
CLK/TRG1
ZC/TO1
CLK/TRG2
ZC/TO2
CLK/TRG3
BAUD_CLK
CTC_CLKA
CTC_CLKB
R13 10K
CTC_IEO
Z80 Pins Breakout
J3
U11C 74HCT132
DISC_LED
U6 74HC374
SD5_MOSI
SD5_CLK
SD5_SSEL
PRN_STROBE
LO_BANK_A15
LO_BANK_A16
LO_BANK_A17
LO_BANK_A18
IORQ_10
GP Output
U7 74HC374
PRN_D0
PRN_D1
PRN_D2
PRN_D3
PRN_D4
PRN_D5
PRN_D6
PRN_D7
IORQ_20
Printer Data
U12 ICL3232CPZ
C1+
C1-
C2+
C2-
VS+
VS-
T1IN
T2IN
R1OUT
R2OUT
T1OUT
T2OUT
R1IN
R2IN
LOGIC
RS232
CON_TX
AUX_TX
CON_RX
AUX_RX
J1
J4
CON
J8
J5
AUX
J10
Sparkfun DEV-13743 Compatible Thru-Hole Adapter
J2 DM3D-SF(41)
SD_SSEL
SD_MOSI
SD_CLK
SD_MISO
SD_DET
DAT2
DAT3/CD
CMD
VDD
CLK
VSS
DAT0
DAT1
DET_A
DET_B
SHIELD
H1 MountingHole
H2 MountingHole
H3 MountingHole
H4 MountingHole
https://github.com/johnwinans/
Copyright (C) 2021 John Winans
This documentation describes Open Hardware and is licensed under the CERN OHL v. 1.2.
You may redistribute and modify this documentation under the terms of the CERN OHL v.1.2. (http://ohwr.org/cernohl). This documentation is distributed WITHOUT ANY EXPRESS OR IMPLIED WARRANTY, INCLUDING OF MERCHANTABILITY, SATISFACTORY QUALITY AND FITNESS FOR A PARTICULAR PURPOSE. Please see the CERN OHL v.1.2 for applicable conditions
If you chose to manufacture products based on this design, please notify me (see license section 4.2) via john@winans.org
Sheet: /
File: 2063-Z80.sch
Title: Z80 Retro Board
Size: B
Date: 2022-03-14
Rev: 4
KiCad E.D.A. kicad 5.1.5+dfsg1-2build2
Id: 1/1