Jan Van Sickle, PLS

1001 SOLVED

Surveying Fundamentals Problems

Second Edition

Professional Publications, Inc.
Belmont, California

How to Get Online Updates for This Book

I wish I could claim that this book is 100% perfect, but 25 years of publishing have taught me that textbooks seldom are. Even if you only took one course in college, you are familiar with the issue of mistakes in textbooks.

I am inviting you to log on to Professional Publications' web site at **www.ppi2pass.com** to obtain a current listing of known errata in this book. From the web site home page, click on "Errata." Every significant known update to this book will be listed as fast as we can say "HTML." Suggestions from readers (such as yourself) will be added as they are received, so check in regularly.

PPI and I have gone to great lengths to ensure that we have brought you a high-quality book. Now, we want to provide you with high-quality after-publication support. Please visit us at **www.ppi2pass.com**.

Michael R. Lindeburg, PE
Publisher, Professional Publications, Inc.

1001 SOLVED SURVEYING FUNDAMENTALS PROBLEMS
Second Edition

Copyright © 2001 by Professional Publications, Inc. All rights reserved. No part of this publication may be reproduced, stored in a retrieval system, or transmitted, in any form or by any means, electronic, mechanical, photocopying, recording, or otherwise, without the prior written permission of the publisher.

Printed in the United States of America

Professional Publications, Inc.
1250 Fifth Avenue, Belmont, CA 94002
(650) 593-9119
www.ppi2pass.com

Current printing of this edition: 4

Library of Congress Cataloging-in-Publication Data
Van Sickle, Jan
1001 solved surveying fundamentals problems / Jan Van Sickle. -- 2nd ed.
p. cm.
ISBN 1-888577-12-6
1. Surveying. 2. Surveying--Problems, exercises, etc. I. Title.
TA545.V27 1997
526.9'076--dc21 97-36532
CIP

CONTENTS

PREFACE vii
ACKNOWLEDGMENTS viii
1 SURVEYING MATHEMATICS 1-1
Units: Definitions and Conversions 1-1
Trigonometry 1-7
Horizontal Curves 1-27
Areas Bounded by Curves 1-57
Vertical Curves 1-63
Areas 1-77
Volumes 1-90
Adjustments 1-100
Directions 1-110
Slope Intercepts 1-116
2 ADVANCED MATHEMATICS 2-1
Quadratic Equations 2-1
Simultaneous Equations 2-6
Areas 2-14
Vertical Curves 2-30
Curve Superelevation 2-41
Spiral Curves 2-46
3 LAND BOUNDARY LAW 3-1
Boundary Law Terms 3-1
Deeds 3-5
Unwritten Rights 3-10
Easements 3-15
Proportionment 3-21
Water Boundaries 3-31
Testimony 3-37

Order of Call and the Priority of Monuments 3-40
Cases 3-45
4 SURVEYING ASTRONOMY 4-1
Astronomical Coordinate Systems 4-1
Geographical Coordinates and their Elements 4-7
The PZS Triangle 4-11
The Earth's Orbit and the Ecliptic 4-13
Solar Observation for Azimuth 4-20
Parallax, Refraction, and the Semidiameter of the Sun . . . 4-26
Observations of Polaris 4-35
Observation for Latitude 4-41
The Equation of Time 4-42
Zone Time 4-44
Sidereal Time 4-50
5 PUBLIC LAND SURVEYING SYSTEM 5-1
History of Public Lands 5-1
Gunter's Chain 5-5
The Solar Compass 5-7
Manual of Instructions 5-8
Limits and Adjustments 5-9
The Quadrangle 5-11
The Township 5-17
The Section 5-20
Closing Corners 5-33
Corners, Monuments, and Accessories 5-38
Corner Records 5-50
Interpretation of Field Notes 5-51
The Establishment of Aliquot Corners 5-55
The Reestablishment of Corners 5-63
Resurveys 5-79
Lotting 5-82
Exceptions and Discrepancies in the Public Record 5-93
Rights of Possession in Public Lands 5-94
Meandering 5-95
Mineral Surveys 5-97

6 SURVEYING INSTRUMENTS AND PROCEDURES . . 6-1
Definitions 6-1
Field Notes 6-3
The Compass 6-4
Optics 6-6
The Level and the Rod 6-10
Grading and Leveling 6-11
Transits and Theodolites 6-33
Taping 6-38
Stadia 6-45
EDM 6-47
Route Staking 6-53
Errors and Statistics 6-64
7 LEGAL DESCRIPTIONS 7-1
Definitions 7-1
Priority of Calls 7-6
Basis of Bearings and Descriptions 7-12
"Of" Descriptions 7-15
Public Land Surveying System Descriptions 7-20
Descriptions within a Subdivision 7-25
Metes and Bounds Descriptions 7-27
Describing Curves 7-29
Describing Easements 7-33
8 PHOTOGRAMMETRY 8-1
General Definitions 8-1
Formats and Cameras 8-9
Scale 8-14
Relief Displacement 8-20
Overlap and the Base-Height Ratio 8-24
Ground Coverage 8-26
Planning Aerial Photography 8-29
Projection Procedures 8-37
Artificial Targets 8-44
9 GEODETIC AND CONTROL SURVEYS 9-1
North American Datums 9-1
Map Projections 9-7
The Lambert Projection 9-10

The Transverse Mercator Projection 9-15
State Plane Coordinate Systems 9-18
Short Geodetic Calculations 9-32
Government Administration of State Plane Coordinate Systems 9-54

10 PLATS AND MAPPING 10-1
Map Types and Symbols 10-1
Map Scales 10-4
Topographic Mapping 10-6
Plats 10-11
ALTA/ACSM Land Title Survey Plats 10-13

11 GLOBAL POSITIONING SYSTEM (GPS) 11-1
The Space Segment 11-1
Control Segment 11-7
GPS Receivers 11-9
Observables 11-14
GPS Surveying 11-18

12 PROJECT MANAGEMENT 12-1
Client Relations 12-1
Ethics and Liability 12-6
Economics 12-10

13 HYDROGRAPHY 13-1
Flow Measurement 13-1
Hydrography at Sea 13-14
Hydrographic Maps 13-20

PREFACE

During my 35-year career as a practicing land surveyor, I have seen the everyday work of surveyors change from transit and tape to the Global Positioning System (GPS) and, similarly, the tools of calculation change from logarithmic tables to personal computers. The surveying field today is one of rapid change and constant new development. The technology grows increasingly more complex and the requirements for licensure more challenging. Concurrently, the call for continuing education in surveying is growing across the country.

Surveying is a profession in transition, and *1001 Solved Surveying Fundamentals Problems* was written to address these changing times. The problems in this book represent the surveying methods and knowledge essential for modern practice. They are from the real world of surveying—one in which fieldwork takes precedence over classroom theory.

Each chapter covers one surveying topic. These topics are further divided into smaller, more focused areas within the chapter, with problems proceeding from the simplest to the most difficult. The structure of each problem is the same: a question, followed by four possible answers, the explanation of the problem's solution, and the correct answer. The explanation of each solution gives clear information about why a particular answer is correct. Every step needed to arrive at the final answer, whether it be a function of logic or of calculation (and sometimes both), is provided.

From total stations to GPS and taping corrections to hydrography, the range of topics is broad so as to be useful to the entire surveying community. For those preparing for their licensing examinations, the exercises have been prepared similar in form, style, and subject matter to the questions comprising the standardized tests of the National Council of Examiners for Engineering and Surveying (NCEES).

It is my sincere hope that both seasoned surveyors and students of the profession will find this book helpful.

Jan Van Sickle, P.L.S.

ACKNOWLEDGMENTS

I would like to express my appreciation to J. Hardwick Butler, P.E., of Middle Georgia College for his expert review of the material in this book. Such a review is particularly difficult when the subjects involved are so wide-ranging.

The help of Daniel Hoekstra, P.L.S., was invaluable, not only because he allowed me to be involved in the first GPS survey of the Grand Canyon, but also for his review of the GPS data in this book.

A big thank you is in order to Jason Standifer, acquisitions editor, for his unflagging good humor and guidance under the pressures inherent in creating a book of this size. I would like to thank the members of Professional Publications' Production Department who made the book a reality: Kurt Stephan, who copyedited the manuscript; Mary Christensson, who typeset the text; Lynelle Dodge and David Bergeron, who produced the illustrations; and Lisa Rominger, production manager, who kept production on track and on schedule. Thank you also to Shelley Arenson, who proofread the text and illustrations. These individuals showed genuine concern about the details of this book. Real commitment to accuracy is hard to find.

I want to acknowledge the support and help of Mogie Niederhut, without whom this book would not have been possible.

Finally, I want to thank my father, Norman Van Sickle, P.E., P.L.S., who has been an inspiration to me. He has been an example of what a land surveyor should know, and more importantly, an example of what a land surveyor should be. It is to him that this book is dedicated.

Jan Van Sickle, P.L.S.

1 SURVEYING MATHEMATICS

UNITS: DEFINITIONS AND CONVERSIONS

1. A surveyor receives a request from a client on a control project to report the results in state plane coordinates, expressed in meters. The project is in a state that has adopted the U.S. survey foot as its standard. In such a state, which relationship is correct?

(A) 1 ft = 0.3048006 m
(B) 1 m = 3.2808000 ft
(C) 1 m = 3.2808399 ft
(D) 1 ft = 0.3048000 m

Solution: The key to this question is the adoption of the survey foot rather than the international foot. Some states have adopted the international foot, which is defined by the wavelength of light emitted when krypton gas is electrically excited. Answers (C) and (D) are correct relationships for describing the international foot.

$$1 \text{ m} = 39.37 \text{ U.S. in}$$
$$1 \text{ ft} = 12 \text{ in}$$
$$1 \text{ U.S. survey ft} = \frac{12 \text{ in}}{39.37 \frac{\text{in}}{\text{m}}} = 0.3048006 \text{ m}$$

Answer is (A)

2. A surveyor making measurements to guide a welder in the installation of a sill on a building wall must provide a 1.40-ft minimum clearance along the property line. However, the welder requires the measurement in feet and inches. What is 1.40 ft expressed to the nearest eighth of an inch?

(A) 1 ft, $4\frac{3}{8}$ in
(B) 1 ft, $3\frac{5}{8}$ in
(C) 1 ft, $4\frac{3}{4}$ in ✓
(D) 1 ft, $3\frac{1}{8}$ in

$1\frac{4}{10} \Rightarrow \frac{3.2}{8} \Rightarrow \frac{4.8}{12}$ $\frac{6.4}{96}$ 8ths/ft.

1 ft 4 in 3/4 in

Solution: The number of whole feet remains the same (1 ft). To convert 0.40 ft into inches, use a proportion.

$$\frac{40}{100} = \frac{x}{12 \text{ in}}$$
$$x = (12 \text{ in})\left(\frac{40}{100}\right)$$
$$= 4.8 \text{ in}$$

Since the answer must be in eighths of an inch, the next step is to convert 8/10 of an inch into eighths of an inch.

$$\frac{8}{10} = \frac{x}{8}$$
$$x = (8)\left(\frac{8}{10}\right)$$
$$= 6.4$$
$$\frac{6.4}{8} \text{ in} = \frac{3.2}{4} \text{ in} \quad [\text{round to } \tfrac{3}{4} \text{ in}]$$

The final result, to the nearest eighth of an inch, is 1 ft, $4\frac{3}{4}$ in.

Answer is (C)

3. A surveyor staking a circular arc 100 ft long finds that the plans show the curve has a degree of curve of one. The surveyor is about to calculate the length of the radius when the party chief says, "It is simply 100 times 1 radian." Which of the following relationships correctly describes 1 radian?

(A) 1 radian $= \dfrac{\pi}{360°}$

(B) 1 radian $= \dfrac{180°}{\pi}$ ✓

(C) 1 radian $= 57°29'58''$

(D) 1 radian $= \dfrac{\pi}{3200 \text{ mils}}$

Solution: A radian is the angle at the center of a circle subtended by an arc with a length equal to the circle's radius. The radian is a unit convenient in calculating circular curves that are expressed in degrees of curve. One radian is equal to $180°/\pi$, or $57°17'44''.8$.

Answer is (B)

4. A property owner from overseas writes to his surveyor with instructions concerning a survey. One of the instructions says, "Please be certain that the property has at least 4 hectares." What is a hectare?

(A) a large shade tree with gray bark
(B) a type of concrete monument
(C) a category of easements
(D) a measure of area ✓ 10,000 sq m = 2.471 Ac.

Solution: A hectare is a measure of land area in the metric system. The term is built on the word *are*, which is 100 sq m, with the prefix *hect*, which indicates multiplication by 100. Therefore, a hectare is equal to 10,000 sq m, or 2.471 ac.

Answer is (D)

5. Which numerical value is equal to $(81)^{-\frac{1}{4}}$?

(A) 5.84
(B) 3
(C) -3
(D) $\frac{1}{3}$ ✓

Solution: The expression $(81)^{-\frac{1}{4}}$ may be expressed as the inverse of the fourth root of 81.

$$(81)^{-\frac{1}{4}} = \frac{1}{(81)^{\frac{1}{4}}} = \frac{1}{\sqrt[4]{81}}$$
$$= \frac{1}{3}$$

Answer is (D)

6. While shopping for an inexpensive theodolite, a surveyor finds that the instrument with the lowest price has a circle that is divided into more graduations than usual. The merchant explains that it is a European instrument and the circle is divided into grads. Which relationship correctly describes a grad?

(A) 1 grad = 00°54′
(B) 1.5 grads = 01°
(C) 01° = 0.9 grads
(D) 10° = 100 grads

Solution: A grad, also known as *grade*, is one hundredth of a right angle. There are 400 grads in a circle, so the grad is a smaller increment than a degree. The degree is a unit of the sexagesimal system and the grad is a unit of the centesimal system. One grad is 0.9 of a degree, or 00°54′.

Answer is (A)

7. An old deed describes two corner monuments as being 18 rods apart. The monuments are recovered and found to be 300 ft apart. What is the difference between the two measurements?

(A) 1 yd
(B) 0.25 rod
(C) 1 m
(D) 2 ft

Solution: Early surveyors used a *rod*, otherwise known as a *pole* or a *perch*, whose length was approximately $16\frac{1}{2}$ ft. While these units are now considered archaic, they are still found in the public record. Eighteen rods is equivalent to 297 ft. If the current measurement is 300 ft, the difference is 3 ft, or 1 yd.

Answer is (A)

1 ROD = $16\frac{1}{2}$ FT.

8. While preparing to set the parts per million on an EDM, the surveyor discovers that the only chart available is calibrated in degrees Celsius. The thermometer indicates 68° Fahrenheit. What is the corresponding temperature in degrees Celsius?

(A) 90°C
(B) 6°C
(C) 55.5°C
(D) 20°C

$°F = \frac{9}{5}°C + 32°$

Solution: According to the Celsius (or Centigrade) temperature scale, water freezes at 0° and boils at 100°. The corresponding freezing and boiling points on the Fahrenheit scale are 32° and 212°, respectively. The conversion from one to the other can be expressed as

$$°\text{F} = \frac{9}{5}°\text{C} + 32°$$

$$°\text{C} = \left(\frac{5}{9}\right)(°\text{F} - 32°)$$

To find 68°F in degrees Celsius,

$$\begin{aligned} {}^\circ\mathrm{C} &= \left(\frac{5}{9}\right)(68^\circ - 32^\circ) \\ &= \left(\frac{5}{9}\right)(36^\circ) \\ &= 20^\circ\mathrm{C} \end{aligned}$$

Answer is (D)

9. While working down a section line from a witness corner monument toward a standard corner in the public land survey system, a surveyor finds that the record indicates a measurement of 15 chains, 64 links. Which value corresponds to that length?

(A) 514 ft, 3 in
(B) 313.05 m
(C) 64.52 rods
(D) 344.08 yd

Solution: In the public land survey system, the unit defined by Gunter's chain remains the standard, even though the instrument is long out of use. The chain is 66 ft long and is divided into 100 links. Therefore, the measurement can be expressed as

$$\begin{aligned} 15 \text{ chains, } 64 \text{ links} &= 15.64 \text{ chains} \\ (15.64 \text{ chains})\left(\frac{66 \text{ ft}}{1 \text{ chain}}\right) &= 1032.24 \text{ ft} \\ (1032.24 \text{ ft})\left(\frac{1 \text{ yd}}{3 \text{ ft}}\right) &= 344.08 \text{ yd} \end{aligned}$$

Answer is (D)

10. What is the sum of the following fractions of an inch?

$$\frac{1}{4}\text{ in},\ \frac{1}{16}\text{ in},\ \frac{17}{32}\text{ in},\ \frac{5}{8}\text{ in},\ \frac{1}{32}\text{ in}$$

(A) $1\frac{3}{4}$ in

(B) $\frac{6}{16}$ in

(C) 1 in

(D) $1\frac{1}{2}$ in

Solution: Express each fraction in 32nds, then add.

$$\frac{8}{32}+\frac{2}{32}+\frac{17}{32}+\frac{20}{32}+\frac{1}{32}=\frac{48}{32}=1\tfrac{16}{32}=1\tfrac{1}{2}\text{ in}$$

Answer is (D)

TRIGONOMETRY

$\frac{1}{\cos}$

11. In the Cartesian coordinate system, the cosine and secant functions are positive in two of the four quadrants. In which two quadrants does this occur?

(A) the first and second quadrants

(B) the third and fourth quadrants

(C) the first and fourth quadrants

(D) the second and third quadrants

(c, s)

(x, y)

Solution: All trigonometric functions are positive in the first quadrant. In the second quadrant, all are negative except two: the sine and the cosecant functions. Only two functions are positive in the third quadrant: the tangent and cotangent. In the fourth quadrant, the cosine and secant functions are positive; all others are negative.

Answer is (C)

12. In an equilateral triangle, what is the sine of half of any one of the interior angles?

(A) 0.866
(B) 1.000
(C) 0.707
(D) 0.500

Solution: In an equilateral triangle, all sides and all angles are equal. Since the sum of the angles must be 180°, each angle of an equilateral triangle must be one-third of 180°, or 60°. The sine of 30° is 0.500.

Answer is (D)

13. The sine of an angle A is equal to which of the following expressions?

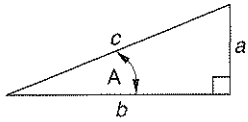

(A) $1 - \csc A$

(B) $\dfrac{\tan A}{\csc A}$

(C) $1 - \cos^2 A$

(D) $\pm\sqrt{1 - \cos^2 A}$

Solution: In a right triangle with legs represented by a and b, and the hypotenuse by c, the Pythagorean theorem indicates

$$a^2 + b^2 = c^2$$

Also,

$$\sin A = \frac{a}{c}$$

$$\cos A = \frac{b}{c}$$

Using the formula $a^2 + b^2 = c^2$, reduce the right side of the equation to 1 by dividing every term by c^2.

$$\frac{a^2}{c^2} + \frac{b^2}{c^2} = 1$$

$$\left(\frac{a}{c}\right)^2 + \left(\frac{b}{c}\right)^2 = 1$$

$$\sin^2 A + \cos^2 A = 1$$

Finally, isolate sin A on the left side of the equation.

$$\sin^2 A = 1 - \cos^2 A$$

$$\sin A = \pm\sqrt{1 - \cos^2 A}$$

Answer is (D)

14. An instrument is 377.14 ft, measured horizontally, from the center of the base of a high-power transmission line tower. The reading at the center, on a vertical rod, taken with the telescope of the instrument level is 6.32 ft. The vertical angle measured to the top of the tower is 11°58′35″. What is the height of the tower?

(A) 80.00 ft
(B) 73.68 ft
(C) 86.32 ft ✓
(D) 83.62 ft

Solution: It is always helpful to sketch a problem like this.

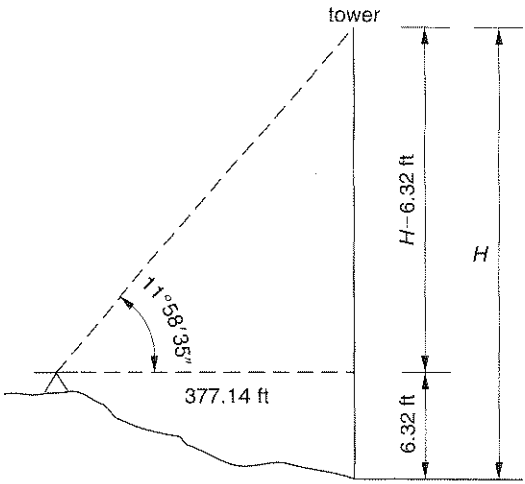

$$\tan 11°58'35'' = \frac{H - 6.32 \text{ ft}}{377.14 \text{ ft}}$$

$$H - 6.32 \text{ ft} = (\tan 11°58'35'')(377.14 \text{ ft})$$

$$H = 80.00 \text{ ft} + 6.32 \text{ ft}$$

$$= 86.32 \text{ ft}$$

Answer is (C)

15. The chord of the arc subtended by 5°03′25″ will vary in length with the radius. Which of the following chord lengths is correct for the indicated radius?

(A) 352.93 ft at 4000 ft
(B) 176.98 ft at 2000 ft
(C) 44.16 ft at 1000 ft
(D) 22.12 ft at 500 ft

Solution: First, sketch the problem.

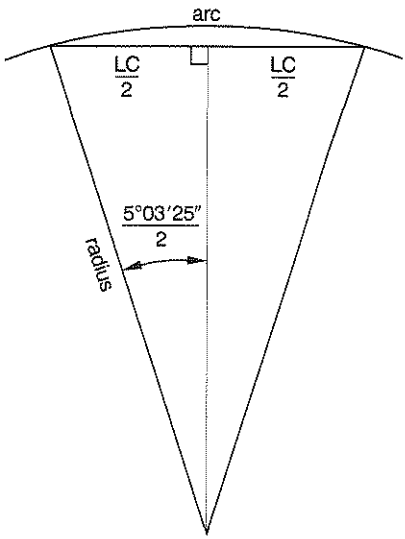

Dividing the angle 5°03′25″ in half allows the problem to be handled with two identical right triangles. The hypotenuse of each of the triangles is the radius. The distance to the center of the long chord is one leg of the triangle. One-half of the length of the long chord is the other leg.

$$\sin\frac{5°03'25''}{2} = \frac{\frac{\text{LC}}{2}}{\text{radius}}$$

$$\frac{\text{LC}}{2} = (\sin 2°31'42''.5)(4000\text{ ft})$$

$$= 176.46\text{ ft}$$

$$\text{LC} = 352.93\text{ ft}$$

Answer is (A)

16. If the cosine of an angle can be expressed by the fraction $\frac{12}{13}$, which fraction would correctly represent the sine of the same angle?

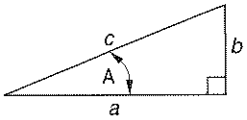

(A) $\dfrac{18}{12}$

(B) $\dfrac{1}{12}$

(C) $\dfrac{12}{5}$

(D) $\dfrac{5}{13}$

Solution: Since $\frac{12}{13}$ is the cosine, let $a = 12$ and $c = 13$. According to the Pythagorean theorem,

$$\begin{aligned} a^2 + b^2 &= c^2 \\ a^2 - c^2 &= b^2 \\ (12)^2 - (13)^2 &= b^2 \\ b^2 &= 144 - 169 = 25 \\ b &= \sqrt{25} = 5 \end{aligned}$$

Therefore, the sine of the angle is $\frac{5}{13}$.

Answer is (D)

17. In the triangle shown, which expression is equivalent to h csc C?

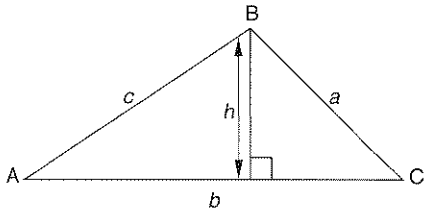

(A) a
(B) b
(C) a^2
(D) h

Solution: The cosecant of angle C is indicated by a/h. When the fraction is multiplied by h, the result is a.

$$\left(\frac{a}{h}\right) h = a$$

Answer is (A)

18. The beginning of a circular curve (PC) occurs at station 12+37.48. The instrument, occupying station 11+00, backsights station 10+00 and turns an angle to the right of 242°15′18″ to the center of the curve. What is the radius of the circular curve?

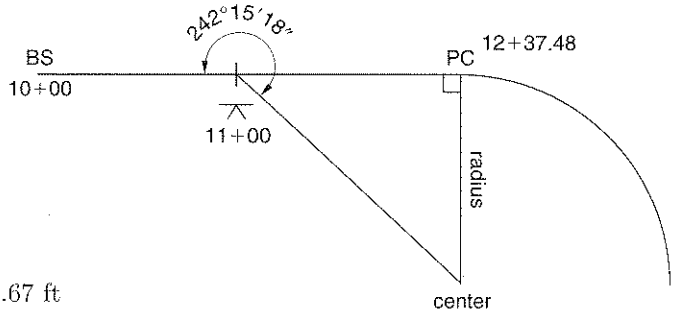

(A) 121.67 ft
(B) 64.00 ft
(C) 261.36 ft
(D) 451.47 ft

Solution: The distance from the station occupied by the instrument to the beginning of the circular curve, PC, is 137.48 ft, found by subtraction of the stations.

$$\begin{array}{r} 12{+}37.48 \\ -11{+}00.00 \\ \hline 1{+}37.48 \end{array} = 137.48 \text{ ft}$$

The radius forms a right angle to the tangent at the PC. Since the backsight was taken down station, 180° is subtracted from the turned angle, leaving 62°15′18″ as the interior angle of a right triangle. The radius is found by solving the right triangle.

$$\tan 62°15'18'' = \frac{\text{radius}}{137.48}$$

$$\text{radius} = (137.48)(\tan 62°15'18'') = 261.36 \text{ ft}$$

Answer is (C)

19. The circle shown has a radius of one unit and a delta angle, Δ, of 90°. Which expression correctly describes the length of line AB?

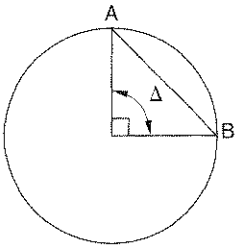

(A) $\dfrac{\Delta}{2}$

(B) $\cos\left(\dfrac{\Delta}{2}\right)$

(C) $\tan\Delta$

(D) $\csc\left(\dfrac{\Delta}{2}\right)$

Solution: Since the angles at A and B must each be 45° and the radius is 1, the length of AB is the cosecant of 45°, or $\csc(\Delta/2)$.

Answer is (D)

20. If the sine of A in the accompanying right triangle is x, what is the cotangent of A in terms of x?

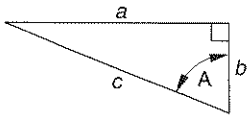

(A) $(1 - \cos \mathrm{A})x$

(B) $\dfrac{b}{cx}$

(C) $\left(\dfrac{c}{a}\right)x$

(D) $(\tan \mathrm{A})x$

Solution: The ratio that expresses the cotangent of angle A is b/a. Since the sine (a/c) is called x, its reciprocal, the cosecant (c/a), can be written as $1/x$. Multiply the cosine by the cosecant to find the cotangent.

$$\left(\frac{b}{c}\right)\left(\frac{c}{a}\right) = \frac{b}{a}$$

Substituting $(1/x)$ for (c/a),

$$\left(\frac{b}{c}\right)\left(\frac{1}{x}\right) = \frac{b}{cx}$$

$$\cot \mathrm{A} = \frac{b}{cx}$$

Expressed another way,

$$(\cos \mathrm{A})(\csc \mathrm{A}) = \cot \mathrm{A}$$

Answer is (B)

21. One of the fundamental tools used to solve oblique triangles is the law of cosines. Which of the following expressions is a correct form of the law of cosines?

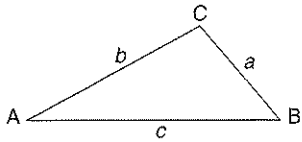

(A) $a^2 = b^2 + c^2 - 2ac\cos \mathrm{A}$

(B) $\cos b = (\cos a \cos c) + (\sin b \sin c)$

(C) $\cos \mathrm{A} = \dfrac{b^2 + c^2 - a^2}{2bc}$

(D) $\cos \mathrm{A} = \dfrac{\cot \mathrm{A}}{\csc \mathrm{A}}$

Solution: The law of cosines can be expressed in several different forms. The correct form here is one that is convenient in solving triangles where all of the sides and none of the angles are known.

Answer is (C)

22. A part of an old deed reads, "to an iron buggy axle; thence N85°15′E, 18 chains and 86 links to a wooden stake; thence S02°30′E, 16 chains and 98 links to a 3-in diameter iron pipe." The wooden stake has decayed. Current measurements yield the following coordinates.

iron buggy axle	7631.413N
	5723.610E
3-in iron pipe	6615.016N
	7012.813E

The decision was made to define the position of the decayed wooden stake by relying on the distance alone. Which coordinate would correspond to the position of the stake under these conditions?

(A) 8223.869N
7509.105E

(B) 7734.636N
6964.083E

(C) 6401.105N
5912.738E

(D) 6512.043N
5774.562E

Solution: The triangle described by the three points is devoid of angles, but all three distances are available. The distance and bearing from the pipe to the axle are found by inverse, and the two other distances are taken from the deed. These descriptions can be multiplied by 66 to convert them to feet. A form of the law of cosines can be used to discover the missing angles from the available distances.

$$\cos A = \frac{b^2 + c^2 - a^2}{2bc}$$

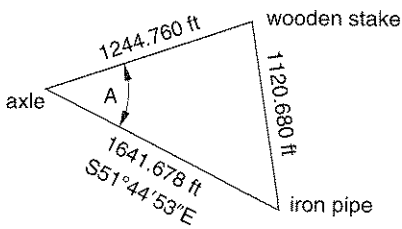

$$\begin{aligned}\cos A &= \frac{(1244.760)^2 + (1641.678)^2 - (1120.680)^2}{(2)(1244.760)(1641.678)} \\ &= 0.73125 \\ A &= 43°00'31''.4\end{aligned}$$

The azimuth from the axle to the pipe is

$$180° - 51°44'53'' = 128°15'07''$$

Therefore, the azimuth from the axle to the pipe is

$$128°15'07'' - 43°00'31'' = 85°14'36''$$

Answer is (B)

23. No point along a stationed line may be closer than 15 ft to an existing building. With the instrument occupying station 0+00 and backsighting station 0+40, an angle of 339°07′44″ is turned to the building corner. Then, with the instrument occupying station 0+40 and backsighting station 0+00, an angle of 104°25′09″ is turned to the same building corner. What is the minimum distance between the line and the building corner?

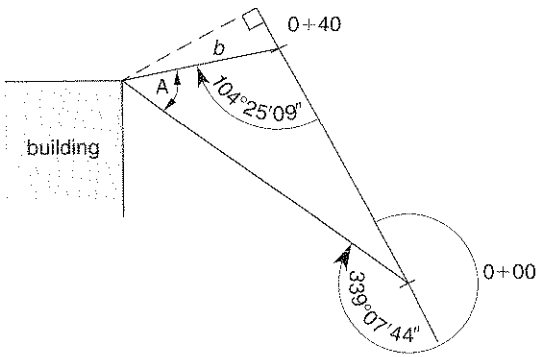

(A) 17.46 ft
(B) 16.91 ft
(C) 20.00 ft
(D) 17.99 ft

Solution: In the oblique triangle shown, the distance along the line between the two stations is 40 ft. The two interior angles are 20°52′16″ and 104°25′09″. First, find the third angle, A.

$$\begin{aligned} A &= 20°52'16'' + 104°25'09'' - 180°00'00'' \\ &= 125°17'25'' - 180°00'00'' \\ &= 54°42'35'' \end{aligned}$$

Then use the law of sines to find b, the shortest side of the triangle.

$$\frac{a}{\sin \mathrm{A}} = \frac{b}{\sin \mathrm{B}}$$

$$\frac{40.00 \text{ ft}}{\sin 54°42'35''} = \frac{b}{\sin 20°52'16''}$$

$$b = (\sin 20°52'16'')\left(\frac{40.00 \text{ ft}}{\sin 54°42'35''}\right)$$

$$\frac{14.25 \text{ ft}}{\sin 54°42'35''} = 17.46 \text{ ft}$$

However, this distance is not the minimum distance between the line and the building corner. The minimum distance must be along a line perpendicular to the stationed line. One side of the right triangle including that perpendicular is the distance found, 17.46 ft. One angle of the same right triangle must be the supplement of the second turned angle.

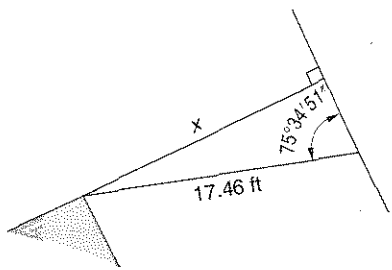

$$180°00'00'' - 104°25'09'' = 75°34'51''$$

$$\sin 75°34'51'' = \frac{x}{17.46 \text{ ft}}$$

$$x = (\sin 75°34'51'')(17.46 \text{ ft})$$

$$= 16.91 \text{ ft}$$

Answer is (B)

24. A three-sided gore is found between adjoining tracts. One side of the gore is 471.67 ft, and the second side is 450.83 ft. The angle between these two sides is 05°12′40″. What is the length of the third side?

(A) 40.95 ft
(B) 42.84 ft
(C) 20.84 ft
(D) 46.82 ft

Solution: This problem can be solved using the law of cosines in its most familiar form.

$$\begin{aligned} a^2 &= b^2 + c^2 - 2bc\cos \mathrm{A} \\ &= (450.83\text{ ft})^2 + (471.67\text{ ft})^2 - (2)(450.83\text{ ft})(471.67\text{ ft})(\cos 05°12'40'') \\ &= (425{,}720.28\text{ ft}) - (425{,}285.97\text{ ft})(\cos 05°12'40'') \\ &= 2192.10\text{ ft} \\ a &= 46.82\text{ ft} \end{aligned}$$

Answer is (D)

25. After all measurements for a survey have been completed, it is important to determine the height of the top of a tower with respect to the instrument used to observe it. The only available information is the actual height of the tower, 157 ft, and the two vertical angles observed. The vertical angle to the base of the tower is 01°46′52″. The vertical angle to the top of the tower is 09°50′33″. What is the vertical distance from the instrument to the top of the tower? Ignore the effects of the curvature and refraction in the solution.

(A) 191.38 ft
(B) 188.08 ft
(C) 205.34 ft
(D) 191.29 ft

Solution: The law of sines is useful in solving this problem. Two triangles are created by the situation.

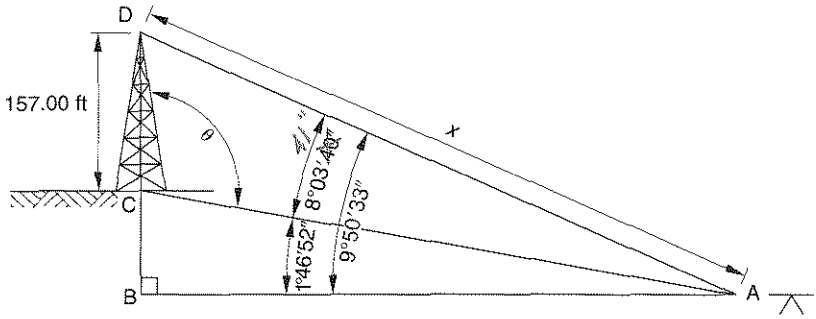

Two of the angles of triangle ABC are known: 90°00′00″ and 01°46′52″.

Find angle ACB.

$$90°00'00'' + 01°46'52'' = 91°46'52''$$
$$\text{ACB} = 180°00'00'' - 91°46'52'' = 88°13'08''$$

Find angle ACD.

$$\theta = \text{ACD} = 180°00'00'' - 88°13'08'' = 91°46'52''$$

Find the length of x.

$$\frac{a}{\sin \text{A}} = \frac{b}{\sin \text{B}}$$
$$\frac{\text{DC}}{\sin \text{DAC}} = \frac{x}{\sin \theta}$$
$$\frac{157.00 \text{ ft}}{\sin 08°03'40''} = \frac{x}{\sin 91°46'52''}$$
$$x = (\sin 91°46'52'')\left(\frac{157.00 \text{ ft}}{\sin 08°03'40''}\right)$$
$$= 1119.05 \text{ ft}$$

Finally, find the length of side DB.

$$\text{DB} = (\sin 09°50'32'')(1119.05 \text{ ft}) = 191.29 \text{ ft}$$

Answer is (D)

26. Two sides of a triangle are 83.40 ft and 95.20 ft, respectively. The angle between the two sides is 51°15′00″. Which values correctly represent the remaining three elements of the triangle?

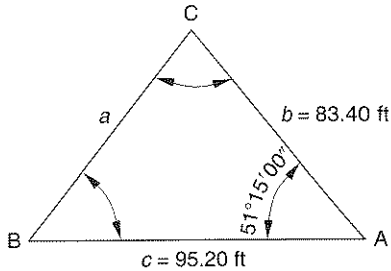

(A) 77.97 ft, 56°31′56″, 72°15′07″
(B) 85.46 ft, 49°35′15″, 79°09′45″
(C) 78.23 ft, 56°31′56″, 72°13′04″
(D) 77.97 ft, 56°31′56″, 72°13′04″

Solution: The side opposite the given angle can be found by the law of cosines, and the remaining sides and angles by the law of sines.

Using the law of cosines,

$$\begin{aligned} a^2 &= b^2 + c^2 - 2bc\cos \mathrm{A} \\ &= (83.40\text{ ft})^2 + (95.20\text{ ft})^2 - (2)(83.40\text{ ft})(95.20\text{ ft})(\cos 51°15'00'') \\ &= 16{,}018.60\text{ ft} - (15{,}879.36\text{ ft})(\cos 51°15'00'') \\ &= 6079.34\text{ ft} \\ a &= 77.97\text{ ft} \end{aligned}$$

Using the law of sines,

$$\begin{aligned} \frac{\sin \mathrm{A}}{a} &= \frac{\sin \mathrm{B}}{b} \\ \frac{\sin 51°15'00''}{77.97\text{ ft}} &= \frac{\sin \mathrm{B}}{83.40\text{ ft}} \\ \sin \mathrm{B} &= (83.40\text{ ft})\left(\frac{\sin 51°15'00''}{77.97\text{ ft}}\right) \\ &= 0.8342 \\ \mathrm{B} &= 56°31'56'' \\ \frac{\sin \mathrm{A}}{a} &= \frac{\sin \mathrm{C}}{c} \end{aligned}$$

$$\frac{\sin 51°15'00''}{77.97 \text{ ft}} = \frac{\sin C}{95.20 \text{ ft}}$$

$$\sin C = (95.20 \text{ ft})\left(\frac{\sin 51°15'00''}{77.97 \text{ ft}}\right)$$

$$= 0.9522$$

$$C = 72°13'04''$$

Answer is (D)

27. x is the length of one side of triangle ABC. The altitude of the triangle, CD, is $x - 4$. It bisects angle ACB and the base AB as well. AB is equal to x. What is the length of x?

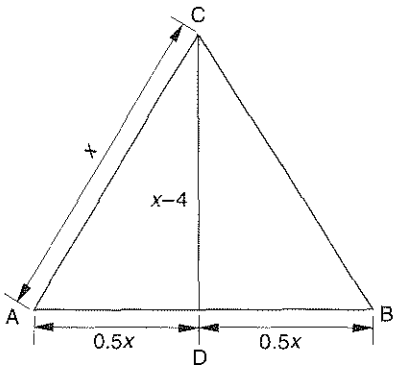

(A) 12.42 ft
(B) 18.76 ft
(C) 35.33 ft
(D) 29.85 ft

Solution: First, find the angle at A.

$$\cos A = \frac{0.5x}{x} = 0.5$$

$$A = 60°$$

Then use the sine of 60° to find the solution.

$$\begin{aligned}\sin 60^\circ &= \frac{x-4}{x}\\ 4 &= x - x\sin 60^\circ\\ &= 1x - 0.866x\\ &= 0.1340x\\ x &= 29.85\end{aligned}$$

Answer is (D)

28. The triangle shown contains 1.5 acres. It is an oblique triangle in which angle B is 102°03′50″, angle A is 47°56′10″, and angle C is 30°00′00″. What is the length of the side opposite angle C?

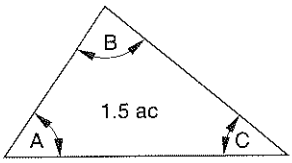

(A) 300.00 ft
(B) 460.43 ft
(C) 375.99 ft
(D) 586.75 ft

Solution: The area, A, of the triangle can be found from the formula

$$\begin{aligned}A &= \frac{c^2 \sin \mathrm{A} \sin \mathrm{B}}{2\sin \mathrm{C}}\\ (2\sin \mathrm{C})A &= (c^2)(\sin \mathrm{A})(\sin \mathrm{B})\\ c^2 &= \frac{(2\sin \mathrm{C})A}{(\sin \mathrm{A})(\sin \mathrm{B})}\\ &= \frac{(2\sin 30^\circ 00' 00'')(65{,}340 \text{ sq ft})}{(\sin 47^\circ 56' 10'')(\sin 102^\circ 03' 50'')}\\ &= \frac{65{,}340 \text{ sq ft}}{0.7260}\\ &= 90{,}000.00 \text{ sq ft}\\ c &= 300.00 \text{ ft}\end{aligned}$$

Answer is (A)

29. Two angles of a triangle are 79°59′ and 44°41′, respectively. The side opposite the angle 44°41′ is 568.00 ft. What are the lengths of the other two sides?

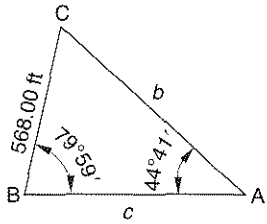

(A) 493.35 and 584.52
(B) 795.44 and 664.35
(C) 823.33 and 774.52
(D) 537.09 and 543.77

Solution: Use the law of sines to find the remaining sides.

$$\frac{a}{\sin \mathrm{A}} = \frac{b}{\sin \mathrm{B}}$$

$$\frac{568.00 \text{ ft}}{\sin 44°41'} = \frac{b}{\sin 79°59'}$$

$$b = (\sin 79°59')\left(\frac{568.00 \text{ ft}}{\sin 44°41'}\right)$$

$$= \frac{559.342 \text{ ft}}{\sin 44°41'}$$

$$= 795.44 \text{ ft}$$

$$79°59' + 44°41' = 124°40'$$

$$180°00' - 124°40' = 55°20'$$

$$\frac{568.00 \text{ ft}}{\sin 44°41'} = \frac{c}{\sin 55°20'}$$

$$c = (\sin 55°20')\left(\frac{568.00 \text{ ft}}{\sin 44°41'}\right)$$

$$= \frac{467.166 \text{ ft}}{\sin 44°41'}$$

$$= 664.35 \text{ ft}$$

Answer is (B)

30. Two sides of a triangle are 82.00 and 73.00, respectively, while the angle between them is 71°38′. What are the other two angles of the triangle?

(A) 42°51′ and 65°31′
(B) 51°32′ and 56°50′
(C) 48°12′ and 60°10′
(D) 49°35′ and 58°47′

Solution: Use the law of cosines to find the missing side of the triangle, and the law of sines to find the remaining angles.

$$\begin{aligned} a^2 &= b^2 + c^2 - 2bc\cos \mathrm{A} \\ &= (82.00 \text{ ft})^2 + (73.00 \text{ ft})^2 - (2)(82.00 \text{ ft})(73.00 \text{ ft})(\cos 71°38') \\ &= 12{,}053 \text{ sq ft} - 3772.34 \text{ sq ft} \\ &= 8280.66 \text{ sq ft} \\ a &= 91.00 \text{ ft} \end{aligned}$$

$$\frac{\sin \mathrm{A}}{a} = \frac{\sin \mathrm{B}}{b}$$

$$\frac{\sin 71°38'}{91.00 \text{ ft}} = \frac{\sin \mathrm{B}}{82.00 \text{ ft}}$$

$$\sin \mathrm{B} = (82.00 \text{ ft})\left(\frac{\sin 71°38'}{91.00 \text{ ft}}\right)$$

$$\begin{aligned} \mathrm{B} &= 58°47' \\ \mathrm{C} &= 180°00'00'' - (58°47' + 71°38') \\ &= 49°35' \end{aligned}$$

Answer is (D)

HORIZONTAL CURVES

The following six problems refer to the illustration shown.

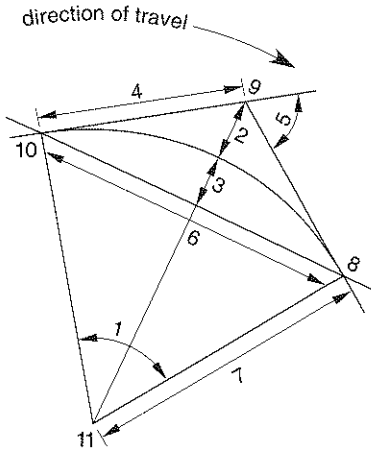

31. The distance labeled 2 in the illustration is known by which name?

(A) middle ordinate
(B) long chord
(C) external distance
(D) semitangent

Solution: The distance from the PI to the midpoint of the curve is known as the *external distance*.

Answer is (C)

32. The angle labeled 1 in the illustration is equal to which of the following?

(A) 360° minus the deflection per foot of the length
(B) 2π radians
(C) the angle labeled 5 in the illustration
(D) one-half of the angle labeled 5 in the illustration

Solution: The angle labeled 5 is usually known as the *angle of intersection*; it is equal to the angle labeled 1, which is usually known as the *delta angle*.

Answer is (C)

33. The distance labeled 3 in the illustration is known by which name?

(A) middle ordinate
(B) point of curvature
(C) long chord
(D) tangent

Solution: The distance from the midpoint of the long chord to the middle of the curve is known as the *middle ordinate*.

Answer is (A)

34. The distance labeled 4 in the illustration is known by which name?

(A) semitangent
(B) back tangent
(C) radius
(D) both A and B

Solution: The terms *semitangent* and *back tangent* both can be properly applied to the line in question. The latter term is dependent on the direction of travel of the work.

Answer is (D)

35. The length of the curve from the point labeled 10 to the point labeled 8 is correctly indicated by which mathematical expression?

(A) $\dfrac{RL}{2}$

(B) $2R\sin\left(\dfrac{I}{2}\right)$

(C) $R\left[1-\cos\left(\dfrac{I}{2}\right)\right]$

(D) $\dfrac{2\pi RI}{360^\circ}$

Solution: The length of the curve, L, is a portion of the circumference, which can be expressed as $2\pi R$. The central angle, I, is the same portion of the whole circle. Therefore,

$$\frac{L}{2\pi R}=\frac{I}{360^\circ}$$
$$L=\frac{2\pi RI}{360^\circ}$$

Answer is (D)

36. Which of the following abbreviations might properly be used for the points labeled 10, 11, and 8, respectively?

(A) PC, CEN, and PT
(B) PI, RP, and PT
(C) PC, RP, and PI
(D) PT, CEN, and PC

Solution: The abbreviations stand for the point of curvature, center of the curve, and point of tangency.

Answer is (A)

37. The long chord of a horizontal circular curve is mathematically represented by which expression?

(A) $\text{LC} = R\tan\left(\frac{I}{2}\right)$

(B) $\text{LC} = R\cos\left(\frac{I}{2}\right)$

(C) $\text{LC} = \frac{\pi RI}{180^\circ}$

(D) $\text{LC} = 2R\sin\left(\frac{I}{2}\right)$

Solution: The right side of each of the preceding expressions describes one element of a circular curve, but only the last one correctly represents the long chord.

Answer is (D)

38. The middle ordinate of a horizontal circular curve is mathematically represented by which expression?

(A) $\text{middle ordinate} = R\left[\sec\left(\frac{I}{2}\right) - 1\right]$

(B) $\text{middle ordinate} = R\left[1 - \cos\left(\frac{I}{2}\right)\right]$

(C) $\text{middle ordinate} = R\sec\left(\frac{I}{2}\right)$

(D) $\text{middle ordinate} = R\tan\left(\frac{I}{2}\right)$

Solution: The middle ordinate can also be expressed by $R\,\text{versin}\,(I/2)$, which is equivalent to

$$R\left[1 - \cos\left(\frac{I}{2}\right)\right]$$

Answer is (B)

39. By the highway definition of the term, what would be the degree of curve, to the nearest minute, of a circular curve with a radius of 450.00 ft?

(A) 12°45′
(B) 12°44′
(C) 13°00′
(D) 15°53′

$100 = \frac{\pi 450 \Delta}{180}$

Solution: The highway definition of the degree of curve is that the central angle, I, subtends an arc of 100 ft. This is in contrast to the railroad definition of the term, which states that the central angle subtends a chord of 100 ft. The known values in the problem are the radius, 450.00 ft, and the arc length, 100.00 ft.

$$\begin{aligned}
\text{arc length} = L = 100.00 \text{ ft} &= \frac{\pi R I}{180^\circ} \\
100.00 \text{ ft} &= \frac{\pi(450.00 \text{ ft})I}{180^\circ} \\
(180^\circ)(100.00) &= 1413.72I \\
18{,}000.00 &= 1413.72I
\end{aligned}$$

$$\begin{aligned}
I &= \frac{18{,}000.00}{1413.72} \\
&= 12.732 \\
&= 12^\circ 44'
\end{aligned}$$

Another method of performing this calculation is to recognize that the degree of curve, by arc definition, is always equivalent to 5729.58 divided by the radius.

$$\begin{aligned}
I &= \frac{5729.58}{R} \\
&= \frac{5729.58}{450.00} \\
&= 12.732 \\
&= 12^\circ 44'
\end{aligned}$$

Answer is (B)

40. What would be the radius of a circular curve with a chord defined degree of curve of 4° and a central angle, I, of 20°?

(A) 719.85 ft
(B) 1432.69 ft
(C) 1045.78 ft
(D) 865.23 ft

Solution: An angle of 4° subtends a chord of 100.00 ft. To find the radius of the curve, use the formula for the long chord.

$$\begin{aligned} \text{LC} &= 2R\sin\left(\frac{I}{2}\right) \\ 100.00 \text{ ft} &= 2R\sin\left(\frac{4^\circ}{2}\right) \\ &= 2R\sin 2^\circ \end{aligned}$$

$$\begin{aligned} 2R &= \frac{100.00 \text{ ft}}{\sin 2^\circ} \\ &= 2865.37 \\ R &= \frac{2865.37}{2} \\ &= 1432.69 \text{ ft} \end{aligned}$$

Another method of performing this calculation is to use the following formula.

$$R = \frac{50 \text{ ft}}{\sin\left(\frac{D}{2}\right)}$$

R is the radius in feet, and D is the degree of curve.

$$\begin{aligned} R &= \frac{50 \text{ ft}}{\sin\left(\frac{4^\circ}{2}\right)} \\ &= \frac{50 \text{ ft}}{0.034899} \\ &= 1432.69 \text{ ft} \end{aligned}$$

Answer is (B)

41. A circular curve has a radius of 100.00 ft and a central angle of 20°. Beginning at the PC, what would be the tangent distance, TD, and the tangent offset TO, to the point of tangency?

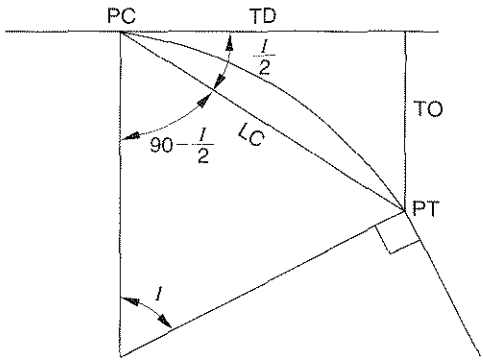

(A) TD = 50.00 ft, TO = 25.12 ft
(B) TD = 35.41 ft, TO = 5.79 ft
(C) TD = 44.09 ft, TO = 15.68 ft
(D) TD = 34.20 ft, TO = 6.03 ft

Solution: The best way to begin this solution is to find the length of the chord.

$$\begin{aligned}\text{LC} &= 2R\sin\left(\frac{I}{2}\right)\\ &= (2)(100.00\text{ ft})\sin\left(\frac{20^\circ}{2}\right)\\ &= (200.00\text{ ft})(\sin 10^\circ)\\ &= 34.73\text{ ft}\end{aligned}$$

As shown in the illustration, the deflection angle is one half of the central angle.

$$\begin{aligned}\text{TD} &= (\text{cosine of the deflection angle})\ (\text{chord})\\ &= (\cos 10^\circ)(34.73\text{ ft})\\ &= 34.20\text{ ft}\end{aligned}$$

The tangent offset, TO, is also found using the deflection angle.

$$\begin{aligned}\text{TO} &= (\text{sine of the deflection angle})(\text{chord})\\ &= (\sin 10^\circ)(34.73\text{ ft})\\ &= 6.03\text{ ft}\end{aligned}$$

Answer is (D)

42. A circular curve with a radius of 750.00 ft, a central angle of 70°, and its PC at station 13+30 must be staked by deflection angles and chords. What is the deflection angle and chord length to station 14+00?

(A) 03°14′42″ and 67.54 ft
(B) 01°23′32″ and 69.95 ft
(C) 02°40′26″ and 69.97 ft
(D) 03°15′12″ and 68.32 ft

Solution: The arc length desired is 70.00 ft.

$$\begin{aligned}\text{deflection angle} &= \frac{180^\circ L}{2\pi R}\\ &= \frac{(180^\circ)(70.00\text{ ft})}{2\pi(750.00\text{ ft})}\\ &= \frac{12{,}600.00}{4712.39}\\ &= 02.6738^\circ = 02^\circ 40' 26''\end{aligned}$$

The deflection angle can be used to find the chord length.

$$\begin{aligned}\text{LC} &= 2R\sin\left(\frac{I}{2}\right)\\ &= 2R\sin(\text{deflection angle})\\ &= (2)(750.00\text{ ft})(\sin 02^\circ 40' 26'')\\ &= (1500\text{ ft})(\sin 02^\circ 40' 26'')\\ &= 69.97\text{ ft}\end{aligned}$$

Answer is (C)

43. The PC of a circular curve is at station 214+23.61, the central angle of the curve is 42°15′, and the radius is 1438.92 ft. What is the station of the PT of the curve?

(A) 224+60.79
(B) 224+84.67
(C) 225+08.55
(D) 228+62.53

Solution: The stationing of a route generally follows the arc of any included curves. To solve the problem, determine the length of the arc of the curve.

$$\begin{aligned}\text{arc length} = L &= \frac{\pi R I}{180^\circ} \\ &= \frac{\pi(1438.92\text{ ft})(42^\circ 15')}{180^\circ} \\ &= \frac{60{,}794.37\pi}{180^\circ} \\ &= \frac{190{,}991.15}{180^\circ} \\ &= 1061.06\text{ ft}\end{aligned}$$

Then add the known arc length to the station of the PC to find the station of the PT.

$$\begin{aligned}\text{PC} &= 214{+}23.61 \\ +L &= 10{+}61.06 \\ \hline \text{PT} &= 224{+}84.67\end{aligned}$$

Answer is (B)

The following two problems refer to the illustration shown.

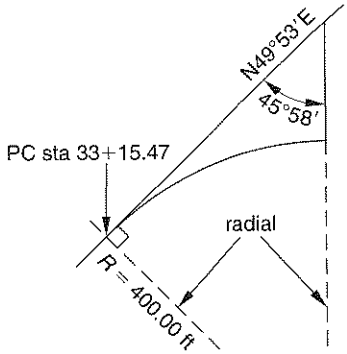

44. What is the station of the intersection of the curve and the line on the right side of the diagram?

(A) 35+45.91
(B) 36+02.38
(C) 35+92.07
(D) 36+22.88

Solution: First, determine the central angle of the curve.

$$\text{central angle} = 90°00' - 45°58' = 44°02'$$

Since the radius is given, the arc length from the PC to the intersection can be found.

$$\begin{aligned}\text{arc length} = L &= \frac{\pi RI}{180°} \\ &= \frac{\pi(400.00\text{ ft})(44°02')}{180°} \\ &= \frac{17{,}613.33\pi}{180°} \\ &= 307.41\text{ ft}\end{aligned}$$

Now the station of the intersection can be found.

$$\begin{aligned}\text{PC} &= 33{+}15.47 \\ +L &= 3{+}07.41 \\ \hline \text{intersection} &= 36{+}22.88\end{aligned}$$

$\boxed{\text{Answer is (D)}}$

45. What is the external distance from the midpoint of the curve to the tangent line?

(A) 31.46 ft
(B) 33.45 ft
(C) 30.98 ft
(D) 32.21 ft

Solution: The external distance is the length from the midpoint of the curve, along the prolongation of a radial line, to the tangent line. The central angle of the curve is 44°02′ and the radius is 400.00 ft. The distance from the center of the curve along the radial line through the midpoint of the curve to the tangent can be called $R + E$, that is, the radius plus the external distance. It is found using the following equation.

$$R + E = R \sec\left(\frac{I}{2}\right)$$

Note that the secant function is 1/cos.

$$\begin{aligned} R + E &= (400.00 \text{ ft})\left[\sec\left(\frac{44°02'}{2}\right)\right] \\ &= (400.00 \text{ ft})(\sec 22°01') \\ &= (400.00 \text{ ft})(1.0787) \\ &= 431.46 \text{ ft} \end{aligned}$$

To find the external distance, subtract the radius from the quantity $R + E$.

$$\begin{aligned} R + E &= 431.46 \text{ ft} \\ -R &= 400.00 \text{ ft} \\ \hline E &= 31.46 \text{ ft} \end{aligned}$$

Answer is (A)

46. Which of the descriptions below correctly defines a reverse curve?

(A) two circular curves lying on opposite sides of a common tangent
(B) a variable radius curve
(C) two curves with radii of different lengths
(D) two curves with equal central angles

Solution: A reverse curve consists of two curves that share a common tangent and stand on opposite sides of that tangent. However, the curves need not have radii of different lengths or equal central angles.

Answer is (A)

47. Which of the descriptions below correctly defines a compound curve?

(A) two circular curves with equal radii
(B) two circular curves with different radii lying on opposite sides of a common tangent
(C) two circular curves with different radii lying on the same side of a common tangent
(D) two variable radius curves

Solution: A compound curve consists of two curves on the same side of a common tangent, with different radii.

Answer is (C)

48. The abbreviations PRC and PCC are correctly defined by which of the fo lowing descriptions?

(A) PRC = point of reverse curvature
PCC = point of constant curvature

(B) PRC = point to resume curvature
PCC = point of compound curvature

(C) PRC = point of reverse curvature
PCC = point of compound curvature

(D) PRC = point of a reverse compound
PCC = point of compound curvature

Solution: These abbreviations are used to indicate the change in the rate c direction of curvature in reverse and compound curves, respectively.

Answer is (C)

49. A line connecting the PC with the PT of a particular reverse curve passe through the PRC. Which of the following statements describes the characteristic of this reverse curve?

(A) The radii are equal.
(B) The central angles are equal.
(C) The long chords are equal.
(D) The line described from the PC to the PT passes through the PRC in al reverse curves.

Solution: In order for the line from the PC to the PT to pass through the PRC the central angles of the two component curves must be the same.

Answer is (B)

The following five problems refer to the illustration shown and the accompanying statement.

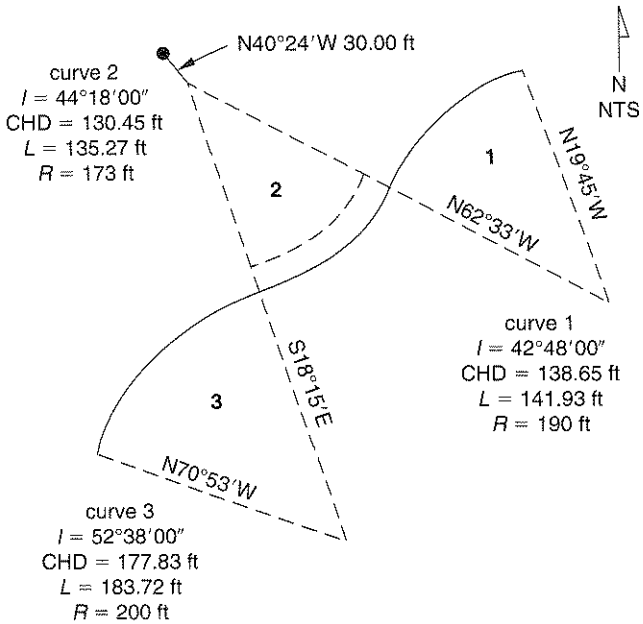

The curving centerline of a street must be changed. The center of curve 2 will be moved N40°24′00″W by 30.00 ft, but its radius will not change. The centers of the other two curves will remain unchanged as well. The following questions refer to these curves after the described alteration.

50. Following the alteration, which list below represents the central angles of the curves?

(A) 1 = 42°40′15″
2 = 40°31′00″
3 = 52°35′50″

(B) 1 = 41°48′08″
2 = 42°00′15″
3 = 53°38′23″

(C) 1 = 41°08′05″
2 = 41°01′36″
3 = 51°01′11″

(D) 1 = 42°35′39″
2 = 44°18′25″
3 = 51°52′02″

Solution: This problem is most easily solved by coordinate geometry. Throughout this solution, the first coordinate given is the northing and the second is the easting.

First, assign coordinates to the center of curve 1 and use the bearings and distances given to compute the coordinates of the other two centers.

center of curve 1:	N 5000.00
	E 5000.00
center of curve 2:	N 5167.33
	E 4677.89
center of curve 3:	N 4813.10
	E 4794.68

The only center that will move is that of curve 2. Its coordinates after a move N40°24′W of 30.00 ft will be

new center of curve 2:	N 5190.18
	E 4658.45

Take the inverse between the new coordinates of the center of curve 2 and the other centers to establish the new radial lines that the reverse curves share.

center of curve 1:		center of curve 2:
N 5000.00	N60°53′25″W	N 5190.18
E 5000.00	390.93 ft	E 4658.45
center of curve 3:		center of curve 2:
N 4813.10	N19°51′49″W	N 5190.18
E 4794.68	400.93 ft	E 4658.45

Find the central angles by subtracting the bearings of the radial lines.

curve 1:

$$\text{central angle} = \begin{array}{r} \text{N}19^\circ 45' 00'' \text{W} \\ -\text{N}60^\circ 53' 25'' \text{W} \\ \hline 41^\circ 08' 25'' \end{array}$$

curve 2:

$$\text{central angle} = \begin{array}{r} \text{S}60^\circ 53' 25'' \text{E} \\ -\text{S}19^\circ 51' 49'' \text{E} \\ \hline 41^\circ 01' 36'' \end{array}$$

curve 3:

$$\text{central angle} = \begin{array}{r} \text{N}70^\circ 53' 00'' \text{W} \\ -\text{N}19^\circ 51' 49'' \text{W} \\ \hline 51^\circ 01' 11'' \end{array}$$

Answer is (C)

51. Following the alteration, which list correctly represents the revised radius c each curve?

(A) 1 = 190.00 ft
2 = 173.00 ft
3 = 200.00 ft

(B) 1 = 204.62 ft
2 = 186.31 ft
3 = 214.98 ft

(C) 1 = 190.00 ft
2 = 200.93 ft
3 = 200.00 ft

(D) 1 = 217.93 ft
2 = 173.00 ft
3 = 227.93 ft

Solution: The statement following the illustration stipulates that the radius o curve 2 remains unchanged. Therefore, following the inverse calculation illus trated in the solution to the previous problem, the remaining radii can be foun by subtraction.

curve 1:

distance from the center of 1 to 2:	390.93 ft
unchanged radius of 2:	−173.00 ft
radius of 1:	217.93 ft

The radius of curve 2 is unchanged at 173.00 ft.

curve 3:

distance from the center of 2 to 3:	400.93 ft
unchanged radius of 2:	−173.00 ft
radius of 3:	227.93 ft

Answer is (D)

52. Following the alteration, which list correctly represents the long chord of each curve?

(A) 1 = 156.48 ft
2 = 123.88 ft
3 = 135.27 ft

(B) 1 = 153.14 ft
2 = 121.25 ft
3 = 196.33 ft

(C) 1 = 155.32 ft
2 = 115.69 ft
3 = 202.96 ft

(D) 1 = 154.66 ft
2 = 123.88 ft
3 = 202.96 ft

Solution: Find the central angle and the radius of each curve, then calculate the long chord of each curve.

$$\text{LC} = 2R\sin\left(\frac{I}{2}\right)$$

curve 1:

$$\begin{aligned}\text{LC} &= (2)(217.93\text{ ft})\left[\sin\left(\frac{41°08'25''}{2}\right)\right]\\ &= 153.14\text{ ft}\end{aligned}$$

curve 2:

$$\begin{aligned}\text{LC} &= (2)(173.00\text{ ft})\left[\sin\left(\frac{41°01'36''}{2}\right)\right]\\ &= 121.25\text{ ft}\end{aligned}$$

curve 3:

$$\begin{aligned}\text{LC} &= (2)(227.93\text{ ft})\left[\sin\left(\frac{51°01'11''}{2}\right)\right]\\ &= 196.33\text{ ft}\end{aligned}$$

Answer is (B)

53. Following the alteration, which list correctly represents the arc length c each curve?

(A) 1 = 156.48 ft
2 = 123.88 ft
3 = 202.96 ft

(B) 1 = 155.03 ft
2 = 128.93 ft
3 = 200.86 ft

(C) 1 = 143.67 ft
2 = 127.37 ft
3 = 231.07 ft

(D) 1 = 153.14 ft
2 = 121.25 ft
3 = 196.33 ft

Solution: The central angle and radius are the critical elements needed to solv this problem; they were found in the solutions of problems 50 and 51, respectively

$$\text{arc length} = L = \frac{\pi RI}{180^\circ}$$

curve 1:

$$\begin{aligned} L &= \frac{\pi(217.93 \text{ ft})(41^\circ 08' 25'')}{180^\circ} \\ &= \frac{28{,}166.58}{180^\circ} \\ &= 156.48 \text{ ft} \end{aligned}$$

curve 2:

$$\begin{aligned} L &= \frac{\pi(173.00 \text{ ft})(41^\circ 01' 36'')}{180^\circ} \\ &= \frac{22{,}297.81}{180^\circ} \\ &= 123.88 \text{ ft} \end{aligned}$$

curve 3:

$$\begin{aligned} L &= \frac{\pi(227.93 \text{ ft})(51°01'11'')}{180°} \\ &= \frac{36{,}533.35}{180°} \\ &= 202.96 \text{ ft} \end{aligned}$$

Answer is (A)

54. Following the alteration, which list correctly represents the bearing of the long chord of each curve?

(A) 1 = S48°51′00″W
2 = S49°36′00″W
3 = S45°26′00″W

(B) 1 = S49°15′54″W
2 = S49°36′51″W
3 = S45°01′48″W

(C) 1 = S49°51′25″W
2 = S49°26′09″W
3 = S44°59′43″W

(D) 1 = S49°40′47″W
2 = S49°37′23″W
3 = S44°37′35″W

Solution: The bearing of the long chord of each curve can be found as follows.

curve 1:

$$\begin{aligned} \text{bearing of the radial line to the PC} &= \text{N19°45′00″W} \\ \text{radial line expressed as an azimuth} &= 340°15'00'' \\ & \underline{-90°00'00''} \\ \text{azimuth of the tangent} &= 250°15'00'' \\ \text{one-half of the central angle} &= \underline{-20°34'13''} \\ \text{azimuth of the long chord} &= 229°40'47'' \\ & \underline{-180°00'00''} \\ \text{bearing of the long chord} &= \text{S49°40′47″W} \end{aligned}$$

curve 2:

bearing of the radial line to the PC =	S60°53′25″E
radial line expressed as an azimuth =	119°06′35″
	+90°00′00″
azimuth of the tangent =	209°06′35″
one-half of the central angle =	+20°30′48″
azimuth of the long chord =	229°37′23″
	−180°00′00″
bearing of the long chord =	S49°37′23″W

curve 3:

bearing of the radial line to the PC =	N19°51′49″W
radial line expressed as an azimuth =	340°08′11″
	−90°00′00″
azimuth of the tangent =	250°08′11″
one-half of the central angle =	−25°30′36″
azimuth of the long chord =	224°37′35″
	−180°00′00″
bearing of the long chord =	S44°37′35″W

Answer is (D)

The following three problems refer to the illustration shown.

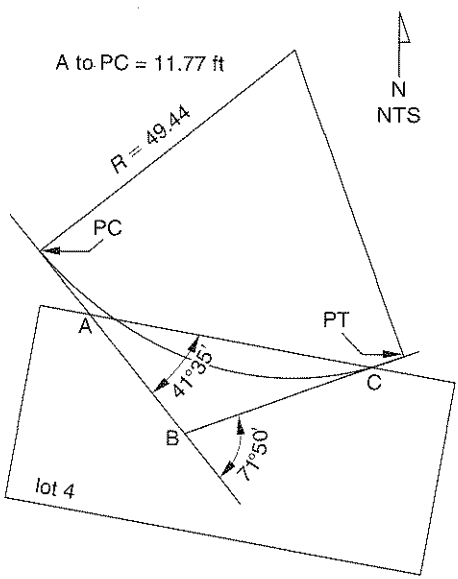

55. The circular curve shown is the southerly edge of a proposed right-of-way. The encroachment of the curve onto lot 4 is not acceptable, so the curve must be realigned. A compound curve will be constructed; both curves will be tangent to the northern boundary of lot 4. The first curve of the compound curve will begin at the PC, and point A will be its PI. What will be the radius of the first curve of the compound curve?

(A) 49.44 ft
(B) 31.00 ft
(C) 52.33 ft
(D) 47.35 ft

Solution: The first curve of the compound curve will have a tangent distance of 11.77 ft, the distance from point A to the PC. An additional element of the curve must be known to establish its radius. Since A is to be the PI, the central angle is 41°35′.

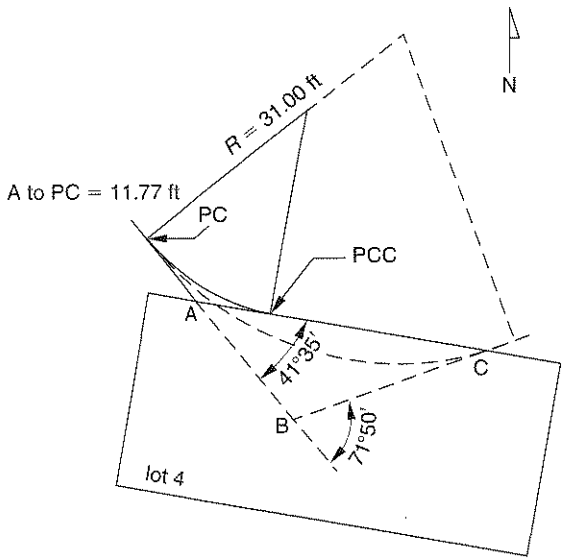

$$T = R\tan\left(\frac{I}{2}\right)$$

$$R = \frac{T}{\tan\left(\frac{I}{2}\right)}$$

$$= \frac{11.77 \text{ ft}}{\tan 20°47'30''}$$

$$= 31.00 \text{ ft}$$

Answer is (B)

56. Point C is to be the PI of the second curve. The second curve in the compound curve begins at the PCC at the end of the first curve. Using the tangent distance from the PCC to point C and the prolongation of the original tangent as shown in the following illustration, what is the radius of the second curve?

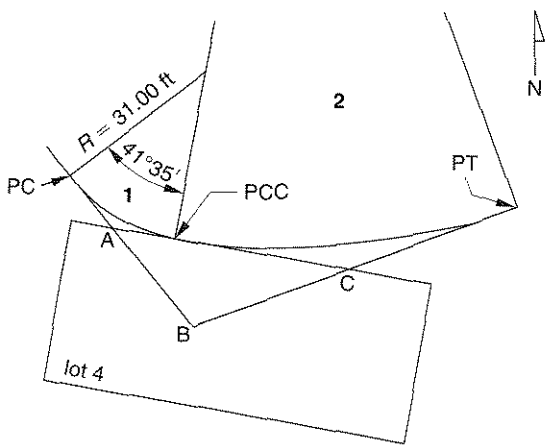

(A) 122.30 ft
(B) 124.20 ft
(C) 123.25 ft
(D) 121.35 ft

Solution: Referring to the original illustration, find the tangent distance of the original single curve.

$$\begin{aligned} T &= R\tan\left(\frac{I}{2}\right) \\ &= (49.44 \text{ ft})\left[\tan\left(\frac{71°50'}{2}\right)\right] \\ &= (49.44 \text{ ft})(\tan 35°55') \\ &= 35.81 \text{ ft} \end{aligned}$$

Subtract from this the tangent distance of the first curve of the compound curve to find the distance from A to B.

$$\begin{array}{r} 35.81 \text{ ft} \\ -11.77 \text{ ft} \\ \hline \text{distance from A to B} = \ \ 24.04 \text{ ft} \end{array}$$

Find the angle at B.

$$\begin{array}{r} 180°00' \\ -71°50' \\ \hline \text{B} = 108°10' \end{array}$$

Then use the law of sines to find the distance from A to C.

$$\begin{aligned} \frac{24.04 \text{ ft}}{\sin 30°15'} &= \frac{x}{\sin 108°10'} \\ x &= 45.34 \text{ ft} \end{aligned}$$

Next, subtract the tangent distance used for the first curve of the compound curve.

$$\begin{array}{r} 45.34 \text{ ft} \\ -11.77 \text{ ft} \\ \hline \text{tangent distance for the second curve} = \ \ 33.57 \text{ ft} \end{array}$$

With the tangent distance and the central angle, find the radius of the curve.

$$\begin{aligned} R &= \frac{T}{\tan\left(\frac{I}{2}\right)} \\ &= \frac{33.57 \text{ ft}}{\tan\left(\frac{30°15'}{2}\right)} \\ &= \frac{33.57 \text{ ft}}{\tan 15°07'30''} \\ &= 124.20 \text{ ft} \end{aligned}$$

Answer is (B)

57. Which list correctly represents the lengths of the long chords of the first and the second curves, respectively?

(A) 1 = 20.18 ft
2 = 50.43 ft

(B) 1 = 23.89 ft
2 = 64.81 ft

(C) 1 = 20.18 ft
2 = 64.21 ft

(D) 1 = 22.01 ft
2 = 64.81 ft

Solution: The radius and central angle have been found for the two component curves in the solutions of problems 56 and 57. Using that information, find the long chord of each.

$$\text{LC} = 2R\sin\left(\frac{I}{2}\right)$$

curve 1:

$$\begin{aligned} \text{LC} &= (2)(31.00 \text{ ft})\left[\sin\left(\frac{41°35'}{2}\right)\right] \\ &= (62.00 \text{ ft})(\sin 20°47'30'') \\ &= 22.01 \text{ ft} \end{aligned}$$

curve 2:

$$\begin{aligned} \text{LC} &= (2)(124.20 \text{ ft})\left[\sin\left(\frac{30°15'}{2}\right)\right] \\ &= (248.20 \text{ ft})(\sin 15°07'30'') \\ &= 64.81 \text{ ft} \end{aligned}$$

Answer is (D)

58. Which of the following statements concerning plane horizontal circular curves is true?

(A) Any three points not in a straight line define a unique circular curve.
(B) Any two points not in a straight line define a unique circular curve.
(C) Any four points not in a straight line define a unique circular curve.
(D) All of the above are true.

Solution: Three points define a unique circular curve, just as two points define a unique line. Four points usually define more than two curves.

Answer is (A)

59. Which of the following statements regarding the perpendicular bisectors of all chords of a circle is correct?

(A) They will divide the circle into sectors of equal area.
(B) They will be perpendicular to each other.
(C) They will be equal to twice the length of the chord they bisect.
(D) They will intersect at the center of the circle.

Solution: The perpendicular bisector of any chord that is inscribed in a circle will pass through the center of that circle. Therefore, several perpendicular bisectors of such chords will intersect at the center of the circle.

Answer is (D)

The following three problems refer to the illustration shown.

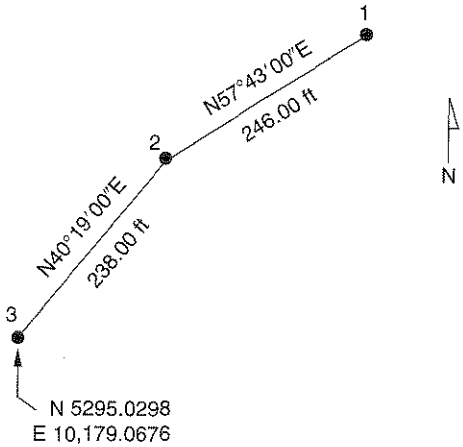

60. What is the radius of the curve that passes through points 1, 2, and 3?

(A) 790.43 ft
(B) 791.04 ft
(C) 799.94 ft
(D) 800.00 ft

Solution: The foundation of this solution is the principle stated in the solution to the previous problem. The perpendicular bisectors of the two lines will intersect at the center of the arc that passes through the three points.

First, establish the coordinates of points 1 and 2, then find the midpoint of each line.

point 3: N5295.0298 E10,179.0676	N40°19′00″E 119.00 ft	point A: N5385.7649 E10,256.0620 (midpoint)	N40°19′00″E 119.00 ft	point 2: N5476.5001 E10,333.0564
point 2: N5476.5001 E10,333.0564	N57°43′00″E 123.00 ft	point B: N5542.1952 E10,437.0427 (midpoint)	N57°43′00″E 123.00 ft	point 1: N5607.8903 E10,541.0290

Next, use this data to find the azimuths of the perpendicular bisectors at A and B.

The line at point A that is perpendicular to line 2-3 will have an azimuth of 130°19′00″.

The line at point B that is perpendicular to line 1-2 will have an azimuth of 147°43′00″.

The following illustration shows the triangle ABC, with C at the center of the curve.

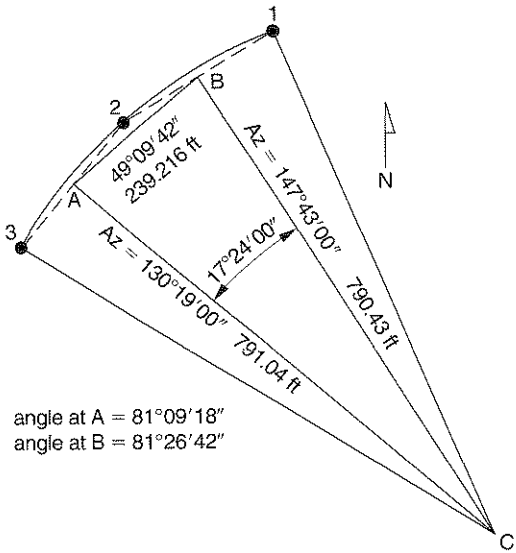

Find the side AB by inversing between the coordinates for points A and B.

point A:		point B:
N5385.7649	N49°09′42″E	N5542.1952
E10,256.0620	239.216 ft	E10,437.0427

Using the law of sines, solve for the lengths of side BC and side AC.

$$\frac{\text{AB}}{\sin \text{C}} = \frac{\text{BC}}{\sin \text{A}} = \frac{\text{AC}}{\sin \text{B}}$$

$$\frac{239.216 \text{ ft}}{\sin 17°24'00''} = \frac{\text{BC}}{\sin 81°09'18''}$$

$$\text{BC} = 790.43 \text{ ft}$$

$$\frac{239.216 \text{ ft}}{\sin 17°24'00''} = \frac{\text{AC}}{\sin 81°26'42''}$$

$$\text{AC} = 791.04 \text{ ft}$$

Use the azimuths and distances from A or B to establish the coordinates of C, the center.

point A:		point C:
N5385.7649	Az 130°19′00″	N4873.9528
E10,256.0620	791.04 ft	E10,859.2143

With the coordinates of the center established, the radius of the curve can be found by inversing between points 1, 2, or 3.

point C:		point 1:
N4873.9528	Az 336°33′42″	N5607.8903
E10,859.2143	799.94 ft (radius)	E10,541.0290

The radius of the curve is 799.94 ft.

Answer is (C)

61. What is the length of the arc of the curve in the preceding illustration?

(A) 239.21 ft
(B) 478.43 ft
(C) 358.82 ft
(D) 485.86 ft

Solution: The radius is available from the solution of the previous problem, but the central angle is also needed to calculate the arc length. The central angle

can be found by first finding the azimuth from point C to point 3, and then subtracting it from the azimuth from point C to point 1.

$$\begin{aligned} \text{azimuth from point C to point 1} &= 336°33'42'' \\ \text{azimuth from point C to point 3} &= -301°45'42'' \\ \hline \text{central angle} &= 34°48'00'' \end{aligned}$$

Next, find the length of the curve.

$$\begin{aligned} L &= \frac{\pi RI}{180°} \\ &= \frac{\pi(799.94 \text{ ft})(34°48'00'')}{180°} \\ &= \frac{87{,}455.38}{180°} \\ &= 485.86 \text{ ft} \end{aligned}$$

Answer is (D)

62. What is the bearing of the long chord and its length for the curve in the preceding illustration?

(A) N49°09′42″E and 485.86 ft
(B) N49°09′42″E and 478.43 ft
(C) N40°19′00″E and 478.43 ft
(D) N57°43′00″E and 485.86 ft

Solution: The chord bearing and length can be found by inversing between point 1 and point 3. The chord length can also be found using the following formula.

$$\begin{aligned} \text{LC} &= 2R\sin\left(\frac{I}{2}\right) \\ &= (2)(799.94 \text{ ft})\left[\sin\left(\frac{34°48'00''}{2}\right)\right] \\ &= (1599.88)(\sin 17°24') \\ &= 478.43 \text{ ft} \end{aligned}$$

The chord bearing is available immediately; it is the same as the line that connects the midpoints of the original lines, line AB. The similar triangles 123 and A2B assure that the bearings of their bases, 1-2 and AB, respectively, will be identical.

Answer is (B)

AREAS BOUNDED BY CURVES

63. A portion of the area within a circle is called a *sector*. Which of the following statements best defines the meaning of the word?

(A) the area bounded by the long chord and the arc of a curve
(B) the area bounded by the semitangents and the arc of a curve
(C) the area bounded by two radii and the arc of a curve
(D) the area bounded by two radii and the semitangents of a curve

Solution: A sector is shaped like a slice of pie. It is bounded by two radii and the included curve.

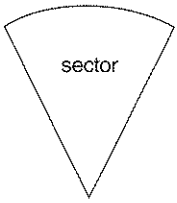

Answer is (C)

64. Which of the following mathematical expressions correctly describes the area within a circle?

(A) $2\pi R$
(B) πD
(C) πR^2
(D) $\pi^2 R$

Solution: The area within a circle is expressed as πR^2.

Answer is (C)

65. What is the area, in acres, of a sector with a central angle of 33° within a circle that has a radius of 1400.00 ft?

(A) 13.00 ac
(B) 12.96 ac
(C) 14.35 ac
(D) 10.75 ac

Solution: The ratio of the area of a sector to the area of the circle is the same as the ratio of the central angle to 360°.

$$\frac{A}{\pi R^2} = \frac{I}{360^\circ}$$

$$\begin{aligned}
\text{area of a sector in square feet} &= \left(\frac{I}{360^\circ}\right)\pi R^2 \\
&= \left(\frac{33^\circ}{360^\circ}\right)\pi(1400\text{ ft})^2 \\
&= (0.0917)\pi(1{,}960{,}000.00\text{ sq ft}) \\
&= 564{,}439.48\text{ sq ft} \\
\text{area in acres} &= \frac{564{,}439.48\text{ sq ft}}{43{,}560\ \frac{\text{ac}}{\text{sq ft}}} \\
&= 12.96\text{ ac}
\end{aligned}$$

Answer is (B)

66. A portion of the area within a circle is known as the *segment*. Which of the following statements best defines the term?

(A) the area bounded by two radii and the included long chord
(B) the area bounded by two radii and the attendant semitangents
(C) the area bounded by the arc of a curve and its two semitangents
(D) the area bounded by the arc of a curve and its long chord

Solution: The long chord of a curve and its arc include an area known as a *segment*.

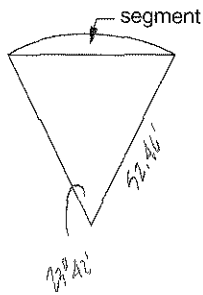

Answer is (D)

67. What is the area, in square feet, of the segment included in a curve with a radius of 52.46 ft and a central angle of 23°42′?

(A) 268.50 sq ft
(B) 16.10 sq ft
(C) 20.89 sq ft
(D) 276.41 sq ft

Solution: The area within a segment is expressed as

$$\frac{LR - R^2 \sin I}{2}$$

L is the length of the curve, and R is the radius. The first task is to find the length of the curve.

$$\begin{aligned} L &= \frac{\pi R I}{180^\circ} \\ &= \frac{\pi(52.46 \text{ ft})(23^\circ 42')}{180^\circ} \\ &= \frac{\pi(1236.19 \text{ ft})}{180^\circ} \\ &= 21.70 \text{ ft} \end{aligned}$$

Now calculate the area of the segment.

$$\begin{aligned}\text{area of the segment} &= \frac{LR - R^2 \sin I}{2} \\ &= \frac{(21.70 \text{ ft})(52.46 \text{ ft}) - (52.46 \text{ ft})^2 \sin 23°42'}{2} \\ &= \frac{1138.38 \text{ sq ft} - 1106.18 \text{ sq ft}}{2} \\ &= 16.10 \text{ sq ft}\end{aligned}$$

Answer is (B)

68. The area between a circular curve and its tangents is sometimes called the *fillet*.

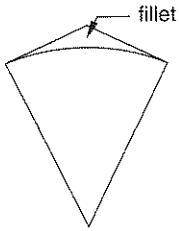

Which of the following mathematical expressions correctly defines the area of a fillet?

(A) RT

(B) $\frac{LR}{2}$

(C) $R\left(T - \frac{L}{2}\right)$

(D) $\frac{I\pi R^2}{360°}$

Solution: The expression RT will yield the area between the radii and the tangents of a curve. $LR/2$ will give the area of the sector. The difference between these two expressions is the area of the fillet.

$$\begin{aligned}\text{area between radii and tangent} &= RT\\ \text{area of the sector} &= \frac{LR}{2}\\ \text{area of the fillet} &= RT - \frac{LR}{2}\\ &= R\left(T - \frac{L}{2}\right)\end{aligned}$$

Answer is (C)

69. A horizontal circular curve with a radius of 270.00 ft and a central angle of 55° will have a fillet of which of the following areas?

(A) 2959.20 sq ft
(B) 2643.91 sq ft
(C) 2506.88 sq ft
(D) 2921.75 sq ft

Solution: The elements needed to solve this problem are the length of the arc, the radius, and the tangent distance. The radius, 270.00 ft, is given.

First, calculate the length of the arc.

$$\begin{aligned}L &= \frac{\pi RI}{180^\circ}\\ &= \frac{\pi(270.00\text{ ft})(55^\circ)}{180^\circ}\\ &= \frac{\pi(14{,}850\text{ ft})}{180}\\ &= 259.18\text{ ft}\end{aligned}$$

Next, calculate the tangent distance.

$$\begin{aligned}T &= R\tan\left(\frac{I}{2}\right)\\ &= (270.00\text{ ft})\left[\tan\left(\frac{55^\circ}{2}\right)\right]\\ &= 140.55\text{ ft}\end{aligned}$$

Finally, calculate the area of the fillet.

$$\begin{aligned}\text{area of the fillet} &= R\left(T - \frac{L}{2}\right)\\ &= (270.00\text{ ft})\left(140.55\text{ ft} - \frac{259.18\text{ ft}}{2}\right)\\ &= (270.00\text{ ft})(10.96\text{ ft})\\ &= 2959.20\text{ sq ft}\end{aligned}$$

Answer is (A)

70. The following illustration represents two concentric circular curves. The outermost curve has a radius of 39.73 ft, and both curves have a central angle of $53°29'$. What is the area between the two arcs?

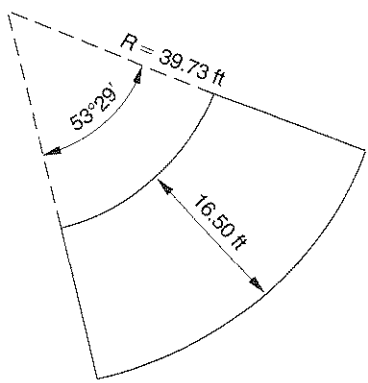

(A) 499.95 sq ft
(B) 500.00 sq ft
(C) 487.31 sq ft
(D) 484.85 sq ft

Solution: The area between the arcs is the difference between the areas of the two sectors.

$$\text{area of a sector} = \left(\frac{I}{360°}\right)(\pi R^2)$$

The larger sector has a radius of 39.73 ft.

$$\begin{aligned}\text{area of the larger sector} &= \left(\frac{53°29'}{360°}\right)\pi(39.73\text{ ft})^2\\ &= (0.14856)(4958.919\text{ sq ft})\\ &= 736.70\text{ sq ft}\end{aligned}$$

The smaller sector has a radius of 16.50 ft less than the first sector.

$$\begin{aligned}R_1 &= 39.73\text{ ft}\\ &\underline{-16.50\text{ ft}}\\ R_2 &= 23.23\text{ ft}\end{aligned}$$

The smaller sector has a radius of 23.23 ft.

$$\begin{aligned}\text{area of the smaller sector} &= \left(\frac{53°29'}{360°}\right)\pi(23.23\text{ ft})^2\\ &= (0.14856)(1695.307\text{ ft})\\ &= 251.85\text{ sq ft}\end{aligned}$$

The area between the two arcs is the difference between the area of the larger sector and the area of the smaller sector.

$$\begin{aligned}&736.70\text{ sq ft}\\ &\underline{-251.85\text{ sq ft}}\\ \text{area between the arcs} = &484.85\text{ sq ft}\end{aligned}$$

Answer is (D)

VERTICAL CURVES

71. What is the figure that will result from the cutting of a right circular cone by a plane parallel with the cone's axis of symmetry?

(A) a loxodrome
(B) an ellipse
(C) a catenary
(D) a parabola

Solution: The figure that results is a parabola, also known as a *conic section*. Vertical curves are parabolic curves.

Answer is (D)

72. Which of the following statements is true of a vertical curve?

(A) The center of the curve is always either the highest or lowest point of the curve.
(B) The tangents are always of equal length.
(C) The tangent offsets always vary as the square of their distances from the point of tangency.
(D) The central angle is always 90°.

Solution: In vertical curves, the tangent offsets vary as the square of the distance from the point of tangency. This relationship provides a straightforward method of calculation.

Answer is (C)

73. A particular vertical curve passes over the summit of a hill. The grade of its first tangent is positive and the grade of its second tangent is negative. The algebraic difference between the two grades divided by the total length of the curve will provide which of the following values?

(A) the average slope of the tangents
(B) the total change in grade from the beginning of the vertical curve to its ending
(C) the rate at which the grade changes along the vertical curve
(D) the square of the tangent offset at the PVI

Solution: Vertical curves, being parabolic, have the beneficial quality of having a constant rate of change in grade throughout their entire lengths. The following calculation will yield this rate of change, r, for a particular vertical curve.

$$r = \frac{g_2 - g_1}{L}$$

Answer is (C)

74. If r is used to stand for the rate of change for a vertical curve and x for the distance from the point of tangency, which of the following expressions would yield the tangent offset for any station along the curve?

(A) $\left(\frac{r}{2}\right)x^2$

(B) rx

(C) $r^2\left(\frac{x}{2}\right)$

(D) $\frac{2r}{x}$

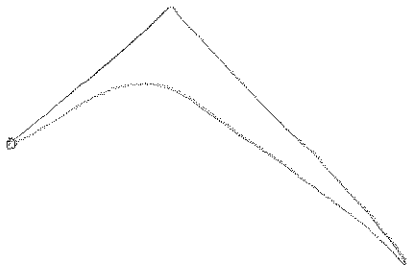

Solution: The rate of change is constant and the tangent offsets vary as the square of the distance from the point of tangency.

Answer is (A)

75. A symmetrical vertical curve may be said to have a long chord—a straight line connecting the PVC with the PVT. The PVI occurs at the intersection of the lines of constant grade that are the tangents of the vertical curve. Which statement applies to these elements?

(A) The vertical distance from the midpoint of the long chord to the midpoint of the curve is equal to the vertical distance from the midpoint of the curve to the PVI.

(B) The highest point of a vertical curve occurs at the midpoint.

(C) The grade on the curve at the PVI is always zero.

(D) The station of the PVI is dependent on the grade of the long chord.

Solution: In a symmetrical vertical curve, the curve will cut in half the line between the midpoint of the long chord and the PVI.

Answer is (A)

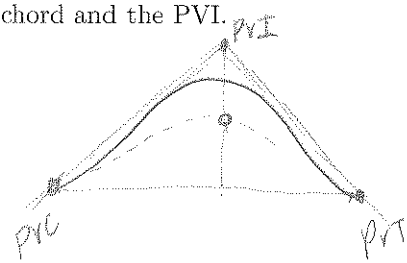

76. Besides its elevation, what is unique about the highest point on a summit type of vertical curve?

(A) The slope of a tangent to the highest point on a summit vertical curve is zero.

(B) The tangent offset is the largest to the highest point on a summit vertical curve.

(C) The highest point on a summit vertical curve always occurs precisely beneath the PVI.

(D) Both A and B are true.

Solution: At either the highest point on a summit vertical curve or the lowest point on a sag vertical curve, a tangent to the curve will be a horizontal line. That is, the slope of the tangent at that point will be zero. These points are often of particular interest when minimum clearances or drainage structures are involved.

Answer is (A)

77. If x is the distance along the vertical curve from the PVC to the high or low point, g_1 is the the initial grade, and r is the rate of change, which mathematical expression is true?

(A) $x = \frac{-g_1}{r}$

(B) $-g_1 x = r$

(C) $\frac{r}{x} = g_1$

(D) $-g_1 r = x$

Solution: The formula $x = -g_1/r$ can be used to find the distance from the PVC to the point on the vertical curve where the slope is zero.

Answer is (A)

The following five problems refer to the illustration shown.

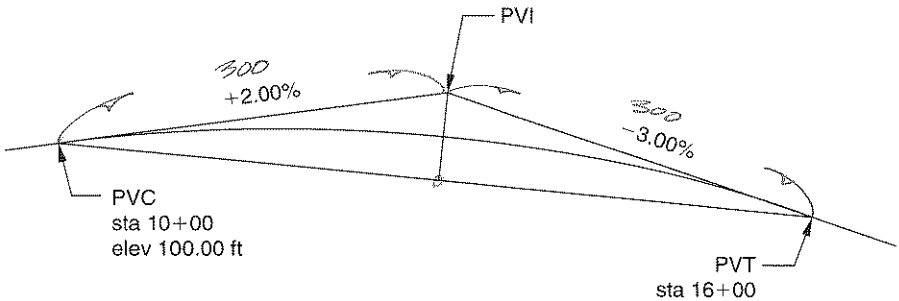

78. Referring to the symmetrical vertical curve, what is the elevation of the PVI, PVT, and the midpoint of the long chord?

(A) PVI = 106.00 ft
PVT = 97.00 ft
chord midpoint = 98.50 ft

(B) PVI = 160.00 ft
PVT = 70.00 ft
chord midpoint = 85.00 ft

(C) PVI = 100.60 ft
PVT = 99.70 ft
chord midpoint = 99.85 ft

(D) PVI = 122.20 ft
PVT = 88.90 ft
chord midpoint = 90.80 ft

Solution: The illustration indicates that the initial grade, g_1, of the tangent is +2.00%, or +0.02 ft per foot. The distance from the PVC to the PVI is 300 ft, since the curve is symmetrical and its overall length is 600 ft.

First, find the elevation of the PVI.

$$\begin{aligned} (300\text{ ft})(+0.02) &= +6.00\text{ ft} \\ \text{elevation of the PVC} &= 100.00\text{ ft} \\ &\ +6.00\text{ ft} \\ \hline \text{elevation of the PVI} &= 106.00\text{ ft} \end{aligned}$$

Then, find the elevation of the PVT.

$$\begin{aligned}(300.00\text{ ft})(-0.03\text{ ft}) &= -9.00\text{ ft}\\ \text{elevation of the PVI} &= 106.00\text{ ft}\\ &\ -9.00\text{ ft}\\ \hline \text{elevation of the PVT} &= 97.00\text{ ft}\end{aligned}$$

Finally, find the elevation of the midpoint of the long chord.

$$\begin{aligned}\text{elevation of the PVT} &= 97.00\text{ ft}\\ \text{elevation of the PVC} &= -100.00\text{ ft}\\ \hline &\ -3.00\text{ ft}\\ \frac{-3.00\text{ ft}}{2} &= -1.50\text{ ft}\\ \text{elevation of the PVC} &= 100.00\text{ ft}\\ &\ -1.50\text{ ft}\\ \hline \text{elevation of the midpoint of the chord} &= 98.50\text{ ft}\end{aligned}$$

Answer is (A)

79. Referring to the same symmetrical vertical curve, what is the largest tangent offset distance from the tangent to the curve anywhere along its length?

(A) 2.60 ft
(B) 4.90 ft
(C) 1.67 ft
(D) 3.75 ft

Solution: The largest tangent offset of this curve is from the PVI to the midpoint of the curve. In a symmetrical vertical curve, the midpoint of the curve is equidistant from the midpoint of the long chord and the PVI.

$$\begin{aligned}\text{elevation of the PVI} &= 106.00\text{ ft}\\ \text{elevation of the midpoint of the chord} &= -98.50\text{ ft}\\ \hline &\ 7.50\text{ ft}\end{aligned}$$

$$\begin{matrix}\text{the tangent offset from the PVI to}\\ \text{the midpoint of the vertical curve}\end{matrix} = \frac{7.50\text{ ft}}{2} = 3.75\text{ ft}$$

Answer is (D)

80. Referring to the same symmetrical vertical curve, what is the tangent offset at station 12+00?

(A) 0.10 ft
(B) 0.42 ft
(C) 0.94 ft
(D) 2.60 ft

Solution: From the tangent line to the curve at any station, the tangent offsets vary with the square of the distance from the point of tangency.

The tangent offset at the PVI, calculated in the previous problem, is 3.75 ft.

$$\frac{\text{tangent offset at 12+50}}{(250)^2} = \frac{\text{tangent offset at 13+00}}{(300)^2}$$

$$\frac{\text{tangent offset at 12+50}}{(250)^2} = \frac{3.75\text{ ft}}{(300)^2}$$

$$\begin{aligned}\text{tangent offset at 12+50} &= (3.75\text{ ft})\left[\frac{(250)^2}{(300)^2}\right]\\ &= 2.60\text{ ft}\end{aligned}$$

Answer is (D)

81. What is the station of the highest point of the vertical curve?

(A) 10+50
(B) 10+03
(C) 13+12
(D) 12+40

Solution: The line tangent to the curve at the highest point is horizontal and the slope is zero. The expression used to find this point is

$$\text{distance (in stations) to the highest point} = \frac{-g_1}{r}$$

g_1 is the entering grade, and r is the rate of change.

First, find the rate of change. g_1 is the entering grade, and g_2 is the exiting grade.

$$\begin{aligned} r &= \frac{g_2 - g_1}{L} \\ &= \frac{-3.00 - (+2.00)}{6} \end{aligned}$$

The grades have been expressed in percentages and the length of the curve in stations.

$$\begin{aligned} r &= \frac{-5}{6} \\ &= -0.833 \end{aligned}$$

The distance in stations from the PVC to the highest point on the curve can now be calculated.

$$\begin{aligned} \text{distance from PVC to highest point} &= \frac{-g_1}{r} \\ &= \frac{-(+2.00)}{-0.833} \\ &= 2.40 \text{ sta} \end{aligned}$$

$$\begin{aligned} \text{station of the PVC} &= 10{+}00 \\ \text{distance to the highest point} &= +2{+}40 \\ \hline \text{station of the highest point} &= 12{+}40 \end{aligned}$$

2+40 = 2.4 sta

Answer is (D)

82. What is the elevation of the highest point on the vertical curve?

(A) 102.25 ft
(B) 101.90 ft
(C) 100.90 ft
(D) 102.40 ft

Solution: The distance from the PVC to the highest point has been calculated in the previous problem. First, it is necessary to find the elevation at that station, 12+40, on the tangent. The grade is +2.00%.

$$\text{(distance along the tangent)(grade)} = \text{rise in elevation, PVC to 12+40}$$
$$(240 \text{ ft})(0.02) = 4.80 \text{ ft}$$

$$\begin{aligned} \text{elevation of the PVC} &= 100.00 \text{ ft} \\ \text{rise to station 12+40} &= +4.80 \text{ ft} \\ \hline \text{elevation on the tangent of 12+40} &= 104.80 \text{ ft} \end{aligned}$$

Calculate the tangent offset at 12+40 to the vertical curve, using the expression

$$\text{tangent offset} = \left(\frac{r}{2}\right) x^2$$

r is the rate of change, and x is the distance in stations from the point of tangency.

$$\begin{aligned} \text{tangent offset} &= \left(\frac{-0.833}{2}\right)(2.4)^2 \\ &= \frac{-4.80}{2} \\ &= -2.40 \text{ ft} \end{aligned}$$

Finally, find the elevation on the curve at station 12+40.

$$\begin{aligned} \text{elevation on the tangent of 12+40} &= 104.80 \text{ ft} \\ \text{tangent offset} &= +(-2.40 \text{ ft}) \\ \hline \text{elevation at 12+40} &= 102.40 \text{ ft} \end{aligned}$$

Answer is (D)

The following three problems refer to the vertical curve described.

A surveyor must stake a symmetrical vertical curve where an entering grade of +0.80% meets an exiting grade of −0.40% at station 90+00, which has an elevation of 100.00 ft. The maximum allowable change in grade per 100.00 ft station is −0.2%.

83. What is the length, in stations, of the vertical curve described?

(A) 8.2 sta
(B) 5.5 sta
(C) 6.0 sta
(D) 9.1 sta

Solution: The length of a vertical curve can be expressed as

$$L = \frac{g_2 - g_1}{r}$$

g_1 is the entering grade, g_2 is the exiting grade, and r is the maximum allowable change in grade per station.

$$L = \frac{-0.40 - (+0.80)}{-0.20}$$
$$= 6 \text{ sta}$$

The length of the vertical curve is 6, or 600 ft.

Answer is (C)

84. What is the elevation of 92+00 on the vertical curve described?

(A) 98.80 ft
(B) 99.20 ft
(C) 98.30 ft
(D) 99.10 ft

Solution: A convenient expression is

$$\text{elevation of sta on curve} = \left(\frac{r}{2}\right)x^2 + g_1 x + \text{elevation of PVC}$$

r is the rate of change, and x is the distance in stations from the PVC.

First, determine the elevation of the PVC.

$$\begin{pmatrix}\text{distance from the}\\ \text{PVI to the PVC}\end{pmatrix}\begin{pmatrix}\text{grade from the}\\ \text{PVI to the PVC}\end{pmatrix} = \begin{pmatrix}\text{change in elevation,}\\ \text{PVI to PVC}\end{pmatrix}$$
$$(300.00 \text{ ft})(-0.008) = -2.40 \text{ ft}$$

$$\begin{aligned}\text{elevation of the PVI} &= 100.00 \text{ ft}\\ &\ +(-2.40 \text{ ft})\\ \hline \text{elevation of the PVC} &= 97.60 \text{ ft}\end{aligned}$$

Next, find the distance in stations from the PVC to the station in question.

$$\begin{aligned}\text{station of the PVI} &= 90{+}00\\ \text{distance, in stations, PVI to PVC} &= -3{+}00\\ \hline \text{station of the PVC} &= 87{+}00\end{aligned}$$

$$\begin{aligned}\text{station in question} &= 92{+}00\\ \text{station of the PVC} &= 87{+}00\\ \hline \text{distance, in stations, PVC to station in question} &= 5{+}00\end{aligned}$$

Now find the rate of change.

$$\begin{aligned} r &= \frac{g_2 - g_1}{L} \\ &= \frac{-0.40 - (+0.80)}{6} \\ &= -0.20 \end{aligned}$$

Note that this value is the same as the maximum allowable percentage of change in grade per station.

Finally, find the elevation of station 92+00 on the vertical curve.

$$\text{elevation of the station on curve} = \left(\frac{r}{2}\right) x^2 + g_1 x + \text{elevation of PVC}$$

$$\begin{aligned} \text{elevation of 92+00} &= \left(\frac{-0.20}{2}\right)(5)^2 + (+0.8)(5) + 97.60 \text{ ft} \\ &= -2.5 \text{ ft} + 4.0 \text{ ft} + 97.60 \text{ ft} \\ &= 99.10 \text{ ft} \end{aligned}$$

Answer is (D)

85. What is the highest point on the curve described above?

(A) 99.10 ft
(B) 99.20 ft
(C) 100.00 ft
(D) 99.43 ft

Solution: The expression used to find the distance from the PVC to the point of zero slope, which is the highest point, is

$$\begin{aligned} \text{distance in stations} &= \frac{-g_1}{r} \\ &= \frac{-(+0.8)}{-0.20} \\ &= 4 \end{aligned}$$

Next, find the station of the highest point on the curve.

$$\begin{aligned} \text{station of the PVC} &= 87{+}00 \\ \text{distance to the highest point} &= +4{+}00 \\ \hline \text{station of the highest point on the curve} &= 91{+}00 \end{aligned}$$

Finally, find the elevation of the highest point on the curve.

$$\text{elevation of station on the curve} = \left(\frac{r}{2}\right)x^2 + g_1 x + \text{elevation of PVC}$$

$$\text{elevation of } 91{+}00 = \left(\frac{-0.20}{2}\right)(4)^2 + (+0.80)(4) + 97.60 \text{ ft}$$

$$= -1.6 \text{ ft} + 3.2 \text{ ft} + 97.60 \text{ ft}$$

$$= 99.20 \text{ ft}$$

Answer is (B)

The following two problems refer to the illustration shown.

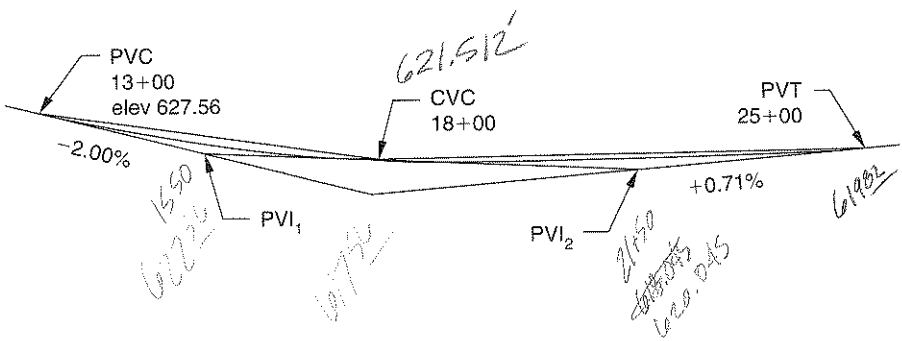

86. What is the elevation of the point of compound vertical curvature, CVC?

(A) 625.72 ft
(B) 622.98 ft
(C) 621.51 ft ✓
(D) 620.96 ft

Solution: An asymmetrical vertical curve can be thought of as two symmetrical vertical curves end to end. The elevation of the CVC can be found by first finding the elevations of PVI_1 and PVI_2.

PVI_1 and PVI_2 fall at the midpoints of the tangent lines on which they are located.

Find the length of the first vertical curve.

$$\begin{aligned} \text{station of the CVC} &= 18{+}00 \\ \text{station of the PVC} &= -13{+}00 \\ \hline \text{length, in stations, of the first curve} &= 5{+}00 \end{aligned}$$

Find the length of the second curve.

$$\begin{aligned} \text{station of the PVT} &= 25{+}00 \\ \text{station of the CVC} &= -18{+}00 \\ \hline \text{length, in stations, of the second curve} &= 7{+}00 \end{aligned}$$

Since the PVIs fall at the midpoints of the tangents,

$$\begin{aligned} \text{station of PVI}_1 &= (13{+}00) + (2{+}50) = 15{+}50 \\ \text{station of PVI}_2 &= (18{+}00) + (3{+}50) = 21{+}50 \end{aligned}$$

$\frac{6232}{10.72}$

Now find the elevations of the two PVIs.

$$\begin{pmatrix}\text{distance PVC to PVI}_1 \\ \text{in stations}\end{pmatrix}\begin{pmatrix}\text{grade} \\ \text{PVC to PVI}_1\end{pmatrix} = \begin{matrix}\text{change in elevation} \\ \text{from PVC to PVI}_1\end{matrix}$$

$$(2.50 \text{ ft})(-2.00) = -5.00 \text{ ft}$$

$$\begin{aligned} \text{elevation of PVC} &= 627.56 \text{ ft} \\ \text{change in elevation to PVI}_1 &= -5.00 \text{ ft} \\ \hline \text{elevation of PVI}_1 &= 622.56 \text{ ft} \end{aligned}$$

$$\begin{pmatrix}\text{distance PVT to PVI}_2 \\ \text{in stations}\end{pmatrix}\begin{pmatrix}\text{grade} \\ \text{PVT to PVI}_2\end{pmatrix} = \begin{matrix}\text{change in elevation} \\ \text{from PVT to PVI}_2\end{matrix}$$

$$(3.50 \text{ ft})(-0.71) = -2.49 \text{ ft}$$

$$\begin{aligned} \text{elevation of the PVT} &= 622.53 \text{ ft} \\ \text{change in elevation to PVI}_2 &= -2.49 \text{ ft} \\ \hline \text{elevation of PVI}_2 &= 620.04 \text{ ft} \end{aligned}$$

The CVC will be on the line between the PVIs.

$$\begin{aligned} \text{elevation of PVI}_2 &= 620.04 \text{ ft} \\ \text{elevation of PVI}_1 &= -622.56 \text{ ft} \\ \hline \text{change in elevation along the line PVI}_1\text{–PVI}_2 &= -2.52 \text{ ft} \end{aligned}$$

The distance between the PVIs is found by the difference between their stations.

$$\begin{aligned} \text{station of PVI}_2 &= 21{+}50 \\ \text{station of PVI}_1 &= -15{+}50 \\ \hline \text{length of PVI}_1\text{–PVI}_2\text{, in stations} &= 6{+}00 \end{aligned}$$

Find the grade of the line between the PVIs.

$$\begin{aligned} \text{change in elevation along the line PVI}_1\text{–PVI}_2 &= -2.52 \text{ ft} \\ \hline \text{length of PVI}_1\text{–PVI}_2 \text{ in stations} &= 6 \end{aligned}$$

The grade of the line PVI_1–PVI_2 is -0.42%.

From PVI_1 to the CVC, the grade is -0.42% and the distance is 2.5 sta.

$$\text{(stations)(grade)} = \text{change in elevation PVI}_1 \text{ to CVC}$$
$$(2.50)(-0.42) = -1.05 \text{ ft}$$

$$\begin{aligned} \text{elevation of PVI}_1 &= 622.56 \text{ ft} \\ \text{change in elevation to CVC} &= -1.05 \text{ ft} \\ \hline \text{elevation of CVC} &= 621.51 \text{ ft} \end{aligned}$$

Answer is (C)

87. Referring to the same asymmetrical vertical curve, what is the elevation of sta 20+60 on the curve?

(A) 622.53 ft
(B) 620.96 ft
(C) 627.56 ft
(D) 621.51 ft

Solution: The elevation and station of the CVC found in the previous problem is the beginning of the second curve. The station in question is 260.00 ft beyond the CVC. In order to find the elevation of sta 20+60, first determine r, the rate of change.

$$\begin{aligned} r &= \frac{g_2 - g_1}{L} \\ &= \frac{+0.71 - (-0.42)}{7} \\ &= 0.161 \end{aligned}$$

Find the elevation of sta 20+60.

$$\text{elevation of station on the curve} = \left(\frac{r}{2}\right)x^2 + g_1 x + \text{elevation of CVC}$$

$$\begin{aligned}\text{elevation of 20+60} &= \left(\frac{0.161}{2}\right)(2.6)^2 + (-0.42)(2.6) + 621.51 \text{ ft}\\ &= 0.54 \text{ ft} + (-1.09 \text{ ft}) + 621.51 \text{ ft}\\ &= 620.96 \text{ ft}\end{aligned}$$

Answer is (B)

AREAS

88. Which of the four-sided figures described contains an area of 1 ac?

(A) a square that is 209.10 ft on a side
(B) a rectangle that is 2 chains by 5 chains ✓
(C) a square that is 10 chains on a side
(D) both B and C

Solution: One of the most convenient aspects of using the chain as a unit of measurement is that 10 square chains is equal to 1 ac.

Answer is (B)

1 SQ CHAIN = 4,356′

89. A property owner wishes to have a lot created from his property that is exactly square and contains 3 ac. What should be the dimension of one side of the square, in feet?

(A) 208.71 ft
(B) 290.81 ft
(C) 295.16 ft
(D) 361.50 ft

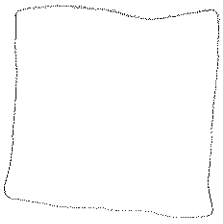

Solution: Find the value, in square feet, of 3 ac.

$$(43{,}560 \text{ sq ft})(3) = 130{,}680 \text{ sq ft}$$

The square root of 3 ac, in square feet, will be the length of one side of the square.

$$\sqrt{130{,}680 \text{ sq ft}} = 361.50 \text{ ft}$$

Answer is (D)

90. What is the area, in acres, of the trapezoid shown?

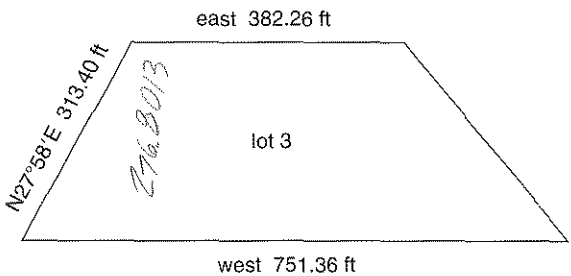

(A) 3.6 ac
(B) 4.2 ac
(C) 1.7 ac
(D) 3.0 ac

Solution: The area of a trapezoid can be expressed as

$$A = \frac{(b_1 + b_2)h}{2}$$

b_1 is a base of the trapezoid, b_2 is the other base of the trapezoid, and h is the height.

The bases are shown in the illustration but the height is not.

First, find the height of the trapezoid. The angle at the SW corner of the trapezoid is

$$\begin{array}{r} 90^\circ 00' \\ -\text{N}27^\circ 58'\text{E} \\ \hline 62^\circ 02' \end{array}$$

Next, find the height of the trapezoid.

$$(\sin 62^\circ 02')(313.40 \text{ ft}) = 276.80 \text{ ft}$$

Finally, find the area of the trapezoid.

$$\begin{aligned} A &= \frac{(b_1 + b_2)h}{2} \\ &= \frac{(751.36 \text{ ft} + 382.26 \text{ ft})(276.80 \text{ ft})}{2} \\ &= 156{,}893.0 \text{ sq ft} \\ \frac{156{,}893.0 \text{ sq ft}}{43{,}560.0 \dfrac{\text{sq ft}}{\text{ac}}} &= 3.6 \text{ ac} \end{aligned}$$

Answer is (A)

91. A large lot is to be subdivided as indicated. The owner has stipulated that the parcel labeled 1 must contain 6 ac. What is the length of line EC?

TOTAL = 9.30027548 AC (APPX.)

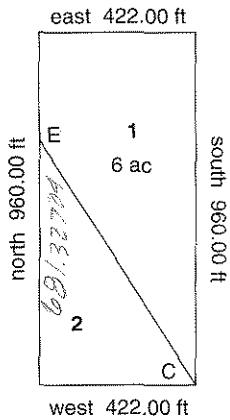

(A) 681.33 ft
(B) 763.98 ft
(C) 801.38 ft
(D) 502.12 ft

Solution: The first step is to find the area of the entire lot.

$$(960.00 \text{ ft})(422.00 \text{ ft}) = 405{,}120 \text{ sq ft}$$

$$\frac{405{,}120 \text{ sq ft}}{43{,}560 \text{ sq ft}} = 9.3 \text{ ac}$$

Since parcel 1 must contain 6 ac, the acreage of parcel 2 must be

$$\begin{array}{r} 9.3 \text{ ac} \\ -6.0 \text{ ac} \\ \hline 3.3 \text{ ac} \end{array}$$

12% OFF!!!

$$(3.3 \text{ ac})\left(43{,}560 \frac{\text{sq ft}}{\text{ac}}\right) = 143{,}748 \text{ sq ft}$$

Parcel 2 is a right triangle. The area can be found using the expression

$$A = \tfrac{1}{2}bh$$

b is the base of the triangle, and h is its height.

$$\begin{aligned} 143{,}748 \text{ sq ft} &= \left(\tfrac{1}{2}\right)(422.00 \text{ ft})h \\ (2)(143{,}748 \text{ sq ft}) &= (422.00 \text{ ft})h \\ 287{,}496 \text{ sq ft} &= (422.00 \text{ ft})h \\ h &= \frac{287{,}496 \text{ sq ft}}{422.00 \text{ ft}} \\ &= 681.27 \text{ ft} \end{aligned}$$

Now that the height of the triangle is known, the length EC, which is its hypotenuse, can be found using the Pythagorean theorem.

$$\begin{aligned} \text{EC}^2 &= (681.27 \text{ ft})^2 + (422.00 \text{ ft})^2 \\ &= 464{,}128.81 \text{ sq ft} + 178{,}084 \text{ sq ft} \\ &= 642{,}212.81 \text{ sq ft} \\ \text{EC} &= 801.38 \text{ ft} \end{aligned}$$

Answer is (C)

92. The area of triangle XYZ contains an eighth of the area within triangle XAB. What is the length of line XY?

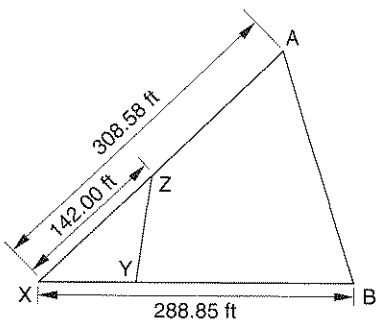

(A) 78.46 ft
(B) 103.45 ft
(C) 53.47 ft
(D) 95.21 ft

Solution: The area of an oblique triangle can be found from the formula

$$A = \frac{ab \sin \text{C}}{2}$$

Neither triangle contains all the required values. However, the relationship between the two triangles is known, allowing the following equation to be constructed.

$$\frac{(\mathrm{BX})(\mathrm{AX})\sin \mathrm{X}}{2} = (8)\left[\frac{(\mathrm{XZ})(\mathrm{XY})\sin \mathrm{X}}{2}\right]$$

In other words, eight times the area of triangle XYZ is equal to the area of triangle XAB.

$$\begin{aligned}
\frac{(288.85\text{ ft})(308.58\text{ ft})(\sin \mathrm{X})}{2} &= (8)\left[\frac{(142.00\text{ ft})(\mathrm{XY})(\sin \mathrm{X})}{2}\right] \\
\frac{(89{,}133.33\text{ sq ft})(\sin \mathrm{X})}{2} &= (4)(142.00\text{ ft})(\mathrm{XY})(\sin \mathrm{X}) \\
(89{,}133.33\text{ sq ft})(\sin \mathrm{X}) &= (8)(142.00\text{ ft})(\mathrm{XY})(\sin \mathrm{X}) \\
89{,}133.33\text{ sq ft} &= (1136.00\text{ ft})(\mathrm{XY})\left(\frac{\sin \mathrm{X}}{\sin \mathrm{X}}\right) \\
\mathrm{XY} &= \frac{89{,}133.33\text{ sq ft}}{1136.00\text{ ft}} \\
&= 78.46\text{ ft}
\end{aligned}$$

Answer is (A)

93. A right-of-way, 100.00 ft wide, crosses a lot, as shown in the following illustration. What is the area, in acres, within the right-of-way?

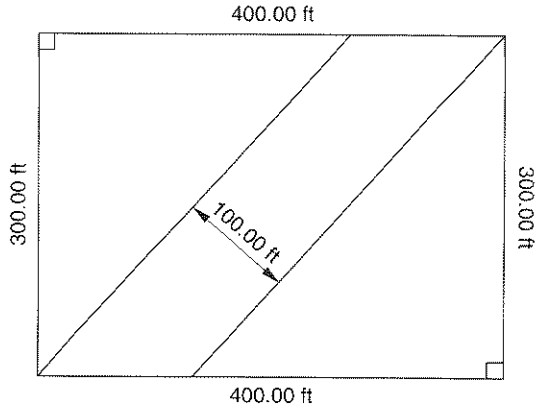

(A) 1.01 ac
(B) 0.88 ac
(C) 0.73 ac
(D) 0.92 ac

Solution: Drawing a sketch is a good way to begin solving this problem.

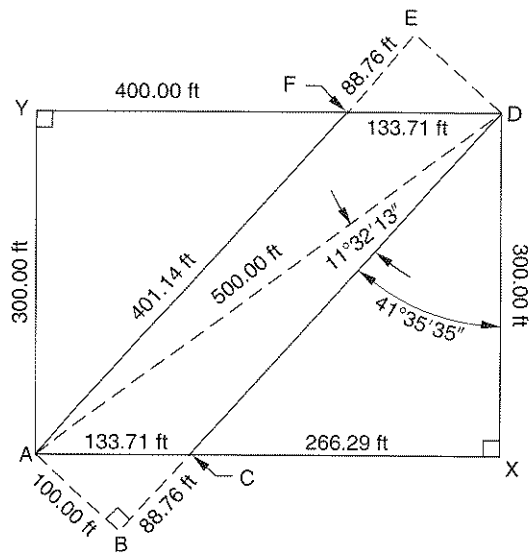

First, construct the diagonal of the rectangle from A to D and find its length using the Pythagorean theorem.

$$\begin{aligned} c^2 &= a^2 + b^2 \\ \text{AD}^2 &= (300.00 \text{ ft})^2 + (400.00 \text{ ft})^2 \\ \text{AD} &= \sqrt{250{,}000.00 \text{ sq ft}} \\ &= 500.00 \text{ ft} \end{aligned}$$

Next, construct the triangle ABD with a right angle at B, and solve for the base of the triangle, BD, using the Pythagorean theorem.

$$\begin{aligned} a^2 + b^2 &= c^2 \\ b^2 &= c^2 - a^2 \\ &= (500.00 \text{ ft})^2 - (100.00 \text{ ft})^2 \\ b &= \sqrt{240{,}000.00 \text{ sq ft}} \\ &= 489.8979 \text{ ft} \end{aligned}$$

Now find the area of the rectangle ABDE.

$$A = lh$$
$$(489.8979 \text{ ft})(100.00 \text{ ft}) = 48{,}989.79 \text{ sq ft}$$

This area must be reduced by the area within triangles ABC and DEF, which are equal in area.

Find the area in triangle ABC.

$$\begin{aligned} \text{ADB} &= \sin^{-1}\left(\frac{100}{500}\right) \\ &= 11°32'13'' \\ \text{XDA} &= \tan^{-1}\left(\frac{400}{300}\right) \\ &= 53°07'48'' \end{aligned}$$

$$\text{XDC} = \begin{array}{r} 53°07'48'' \\ -11°32'13'' \\ \hline 41°35'35'' \end{array}$$

$$\begin{array}{rr} & 90^\circ 00' 00'' \\ & -41^\circ 35' 35'' \\ \hline \text{XCD} = & 48^\circ 24' 25'' \end{array}$$

$$\text{XCD} = \text{BCA}$$

$$\begin{aligned} \text{BC} &= (100.00 \text{ ft})(\cot 48^\circ 24' 25'') \\ &= 88.76 \text{ ft} \\ \text{area of triangle ABC} &= \left(\tfrac{1}{2}\right)(\text{base})(\text{height}) \\ &= \left(\tfrac{1}{2}\right)(88.76 \text{ ft})(100.00 \text{ ft}) \\ &= 4438.00 \text{ sq ft} \end{aligned}$$

Find the combined area of triangles ABC and DEF.

$$(4438.00 \text{ sq ft})(2) = 8876.00 \text{ sq ft}$$

Finally, find the area inside the 100.00-ft right-of-way.

$$\begin{array}{r} 48{,}990.00 \text{ sq ft} \\ -8876.00 \text{ sq ft} \\ \hline 40{,}114.00 \text{ sq ft} \end{array}$$

$$\frac{40{,}114.00 \text{ sq ft}}{43{,}560.00 \dfrac{\text{sq ft}}{\text{ac}}} = 0.92 \text{ ac}$$

Answer is (D)

94. In order to determine the area of a parcel that adjoins a small lake, a line was established nearly parallel to the lake's shore and stationed from 0+00 to 1+75, at intervals of 25.00 ft. Measurements perpendicular to the line were taken from each station to the lake's shore. From the measurements given, what is the area, in acres, between the line and the lake?

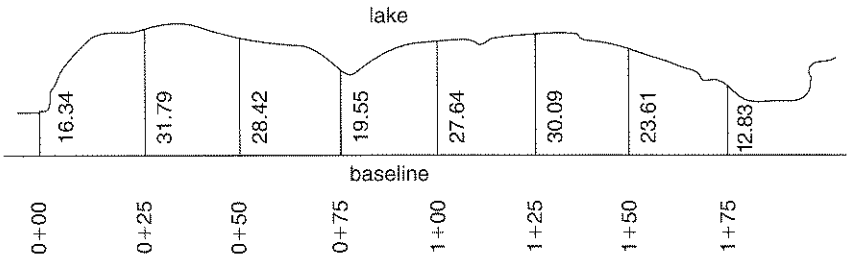

(A) 0.10 ac
(B) 0.35 ac
(C) 0.22 ac
(D) 0.08 ac

Solution: There are two ways to solve this type of problem. One method is Simpson's one-third rule; the other is the trapezoidal rule.

To use Simpson's one-third rule, find the sum of the end offsets, plus twice the sum of the odd intermediate offsets and four times the sum of the even offsets. Multiply the quantity determined by one-third of the common interval between offsets. The result is the required area.

Using this rule to find the area in the problem, first find the sum of the end offsets.

$$\begin{array}{r} 16.34 \text{ ft} \\ +12.83 \text{ ft} \\ \hline 29.17 \text{ ft} \end{array}$$

Next, find the sum of the odd intermediate offsets.

$$\begin{array}{rr} \text{third offset} = & 28.42 \text{ ft} \\ \text{fifth offset} = & +27.64 \text{ ft} \\ \text{seventh offset} = & +23.61 \text{ ft} \\ \hline \text{sum of the odd intermediate offsets} = & 79.67 \text{ ft} \end{array}$$

Double the sum of the odd intermediate offsets.

$$(79.67 \text{ ft})(2) = 159.34 \text{ ft}$$

Now find the sum of the even intermediate offsets.

$$\begin{aligned} \text{second offset} &= 31.79 \text{ ft} \\ \text{fourth offset} &= +19.55 \text{ ft} \\ \text{sixth offset} &= \underline{+30.09 \text{ ft}} \\ & 81.43 \text{ ft} \end{aligned}$$

Multiply the sum of the even intermediate offsets by four.

$$(81.43 \text{ ft})(4) = 325.72 \text{ ft}$$

Next, find the sum of the required quantities.

$$\begin{aligned} \text{sum of the end offsets} &= 29.17 \text{ ft} \\ \text{twice the sum of the odd offsets} &= +159.34 \text{ ft} \\ \text{four times the sum of the even offsets} &= \underline{+325.72 \text{ ft}} \\ & 514.23 \text{ ft} \end{aligned}$$

Multiply the sum above by one-third of the common interval between the offsets.

$$\left(\tfrac{1}{3}\right)(25.00 \text{ ft})(514.23 \text{ ft}) = 4285.25 \text{ sq ft}$$

Finally, convert square feet to acres.

$$\frac{4285 \text{ sq ft}}{43{,}560 \text{ sq ft}} = 0.10 \text{ ac}$$

Answer is (A)

95. To find the area between a straight fence and the bottom of a dry gulch, stationing was established along the fence and perpendicular offsets measured from them to the bottom of the ravine. All of the given distances were measured to the nearest foot.

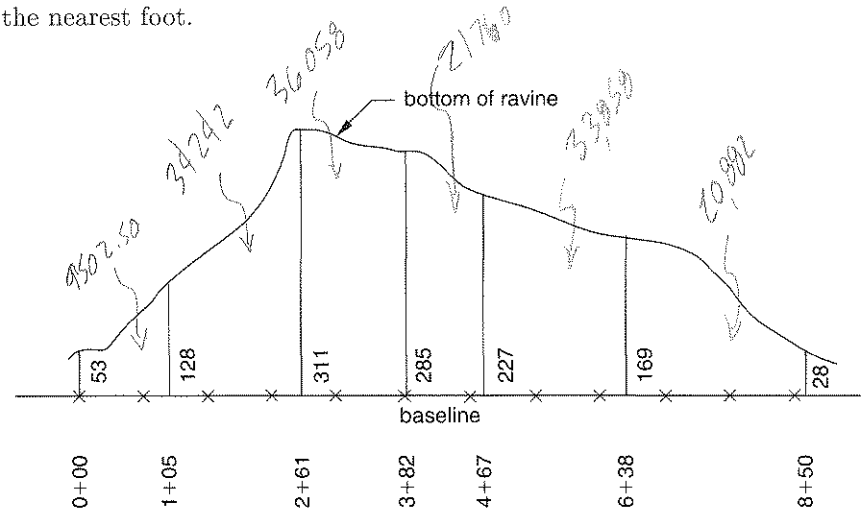

What is the area, in acres, between the fence and the bottom of the ravine?

(A) 2.7 ac
(B) 1.9 ac
(C) 3.6 ac
(D) 3.2 ac

Solution: The trapezoidal rule can be used to solve this problem. To use this rule, add the average of the end offsets to the sum of the intermediate offsets. The product of this quantity and the common interval between the offsets is the required area.

However, in this case, the interval between the offsets is not common, so a variation of the trapezoidal rule will be helpful. Each pair of offsets and the distance between them will be treated as a right trapezoid, and the area of each of these trapezoids taken together will give the area between the fence and the bottom of the ravine.

$$A = \frac{(h_1 + h_2)d}{2}$$

This expression can be used to find the area of each trapezoid that comprises the figure. h is an offset, and d is the distance between consecutive stations.

Begin with the trapezoid between 0+00 and 1+05.

$$\begin{aligned} & 1{+}05 \\ & -0{+}00 \\ \hline d = \; & 105 \text{ ft} \\ h_1 &= 53 \text{ ft} \\ h_2 &= 128 \text{ ft} \\ A &= \frac{(h_1 + h_2)d}{2} \\ &= \frac{(53 \text{ ft} + 128 \text{ ft})(105 \text{ ft})}{2} = 9502.5 \text{ sq ft} \end{aligned}$$

Calculate the area of the trapezoid between 1+05 and 2+61.

$$\begin{aligned} & 2{+}61 \\ & -1{+}05 \\ \hline d = \; & 156 \text{ ft} \\ h_1 &= 128 \text{ ft} \\ h_2 &= 311 \text{ ft} \\ A = & \frac{(128 \text{ ft} + 311 \text{ ft})(156 \text{ ft})}{2} = 34{,}242.0 \text{ sq ft} \end{aligned}$$

99.3952317

250.998

Calculate the area of the trapezoid between 2+61 and 3+82.

$$A = \frac{(311 \text{ ft} + 285 \text{ ft})(121 \text{ ft})}{2} = 36{,}058.0 \text{ sq ft}$$

Calculate the area of the trapezoid between 3+82 and 4+67.

$$A = \frac{(285 \text{ ft} + 227 \text{ ft})(85 \text{ ft})}{2} = 21{,}760.0 \text{ sq ft}$$

Calculate the area of the trapezoid between 4+67 and 6+38.

$$A = \frac{(227 \text{ ft} + 169 \text{ ft})(171 \text{ ft})}{2} = 33{,}858.0 \text{ sq ft}$$

Calculate the area of the trapezoid between 6+38 and 4+67.

$$A = \frac{(169 \text{ ft} + 28 \text{ ft})(212 \text{ ft})}{2} = 20{,}882.0 \text{ sq ft}$$

The area between the fence and the bottom of the ravine is the sum of the areas of the trapezoids.

$$\begin{array}{r} 9{,}502.5 \text{ sq ft} \\ 34{,}242.0 \text{ sq ft} \\ 36{,}058.0 \text{ sq ft} \\ 21{,}760.0 \text{ sq ft} \\ 33{,}858.0 \text{ sq ft} \\ +20{,}882.0 \text{ sq ft} \\ \hline 156{,}302.5 \text{ sq ft} \end{array}$$

Divide the sum by 43,560 sq ft/ac to express the answer in acres.

$$\frac{156{,}302.5 \text{ sq ft}}{43{,}560.0 \dfrac{\text{sq ft}}{\text{ac}}} = 3.6 \text{ ac}$$

Answer is (C)

VOLUMES

96. What quantity, in cubic feet, is contained within 1 cu yd?

(A) 9 cu ft
(B) 14 cu ft
(C) 6 cu ft
(D) 27 cu ft

Solution: The cubic yard, the most common unit of measurement used in earthwork volumes, contains 27 cu ft. The cubic yard is equal to $(3 \text{ ft})^3$.

$$1 \text{ cu yd} = (3 \text{ ft})(3 \text{ ft})(3 \text{ ft}) = 27 \text{ cu ft}$$

Answer is (D)

97. Which of the following methods will consistently produce a more accurate volume computation than the others?

(A) the DMD method
(B) the coordinate method
(C) the average end area method
(D) the prismoidal method

Solution: A prismoid is a solid with plane sides and parallel (but unequal) ends. In the prismoidal method of calculating volumes of earthwork, these ends, or cross sections, are augmented by a section midway between, and parallel with, the two end bases. The prismoidal method is consistently more accurate than the more easily applied average end area method.

Answer is (D)

98. Which of the following characteristics of a route survey would be likely to increase the difference between the volumes calculated using the prismoidal method and the same volumes calculated using the average end area method?

(A) Consecutive cross sections, or end areas, change shape and area very little along the route.
(B) Consecutive cross sections change shape and area dramatically along the route.
(C) The ground over which the route passes is quite irregular and the cross sections are taken at shorter-than-usual intervals.
(D) Both B and C are true.

Solution: The prismoidal method of calculating volumes is not as convenient as the average end area method, and the extra accuracy does not always justify the extra difficulty. However, when the irregularity of the ground causes large variations in the areas of successive cross sections, the difference in the accuracy between the two methods grows greater.

Answer is (D)

99. Which of the following statements characterizes a fairly consistent difference between volumes calculated by the average end area method and those calculated by the prismoidal method?

(A) Volumes calculated by the prismoidal method are consistently larger than those calculated by the average end area method.

(B) Volumes calculated by the prismoidal method are consistently smaller than those calculated by the average end area method.

(C) Volumes calculated by the prismoidal method are less reliable than those calculated by the average end area method, but are more frequently used.

(D) Volumes calculated by the average end area method are only an approximation of the actual quantity of earth, but those calculated by the prismoidal method are not.

Solution: The prismoidal method will generally yield a smaller volume than that found by the average end area method. An exception arises when a cross section with a large height and a narrow width is immediately followed by a cross section that is very wide but has a small height.

Answer is (B)

100. A storage pile of crushed rock is 100.00 ft square at its base and 50.00 ft square on the top. The pile is 25.00 ft high. What is the volume of rock in the pile?

(A) 5787 cu yd
(B) 6944 cu yd
(C) 5208 cu yd
(D) 7593 cu yd

IN CALCULATOR

Solution: The pile can be solved in two component parts. First, find the volume of the portion of the pile that is 50.00 ft by 50.00 ft by 25.00 ft.

$$\begin{aligned}\text{partial volume} &= (50\text{ ft})(50\text{ ft})(25\text{ ft})\\ &= 62{,}500\text{ cu ft}\end{aligned}$$

Next, find the volume of the remainder of the pile. The side slopes are necessarily 45°. Therefore, the volume in the following calculation is divided by 2.

$$\text{volume of the remainder} = \frac{(100\text{ ft})(100\text{ ft})(25\text{ ft}) - 62{,}500\text{ cu ft}}{2}$$
$$= 93{,}750\text{ cu ft}$$

Find the sum of the two component parts.

$$\begin{array}{r} 62{,}500\text{ cu ft} \\ +93{,}750\text{ cu ft} \\ \hline 156{,}250\text{ cu ft} \end{array}$$

Finally, express the answer in cubic yards.

$$\frac{156{,}250\text{ cu ft}}{27} = 5787\text{ cu ft}$$

Answer is (A)

101. Two level cross sections a full station (100 ft) apart have center heights of 3.60 ft and 4.80 ft, respectively. Both cross sections are in cut and the base width of the designed roadway is 44.00 ft. The side slopes are $1\frac{1}{2}$:1. What is the volume between these cross sections calculated by the average end area method?

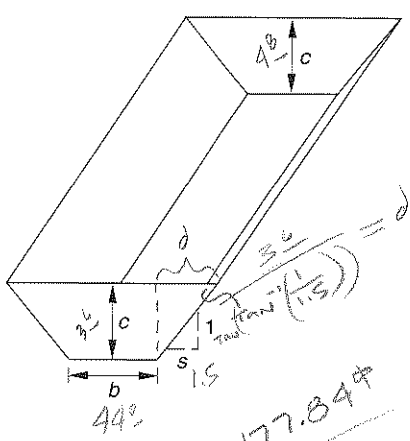

(A) 1019.5 cu yd
(B) 896.42 cu yd
(C) 948.31 cu yd
(D) 784.4 cu yd

Solution: First, it is necessary to find each cross-sectional area. The area of a simple level section can be expressed as

$$A = c(b + sc)$$

c is the cross section's height, b is the length of the base, and s is the slope.

$$\begin{aligned} A = A_1 &= (3.60 \text{ ft})[44.00 \text{ ft} + (1.5)(3.60 \text{ ft})] \\ &= (3.60 \text{ ft})(44.00 \text{ ft} + 5.40 \text{ ft}) \\ &= (3.60 \text{ ft})(49.40 \text{ ft}) \\ &= 177.84 \text{ sq ft} \end{aligned}$$

$$\begin{aligned} A = A_2 &= (4.80 \text{ ft})[44.00 \text{ ft} + (1.5)(4.80 \text{ ft})] \\ &= (4.80 \text{ ft})(44.00 \text{ ft} + 7.20 \text{ ft}) \\ &= (4.80 \text{ ft})(51.20 \text{ ft}) \\ &= 245.76 \text{ sq ft} \end{aligned}$$

Next, find the volume between the two cross sections. The volume by the average end area method can be expressed as

$$V = \left(\frac{A_1 + A_2}{2}\right)\left(\frac{L}{27}\right) \quad \text{[in cubic yards]}$$

A_1 is the area of the first cross section, A_2 is the area of the second cross section, and L is the distance between the cross sections.

$$\begin{aligned} V &= \left(\frac{177.84 \text{ sq ft} + 245.76 \text{ sq ft}}{2}\right)\left(\frac{100 \text{ ft}}{27}\right) \\ &= \left(\frac{423.60 \text{ sq ft}}{2}\right)\left(\frac{100 \text{ ft}}{27}\right) \\ &= (211.80 \text{ sq ft})(3.7037 \text{ ft}) \\ &= 784.4 \text{ cu yd} \end{aligned}$$

Answer is (D)

The following four problems refer to the illustration and the data returned from the setting of slope stakes along a proposed road. All dimensions are in feet.

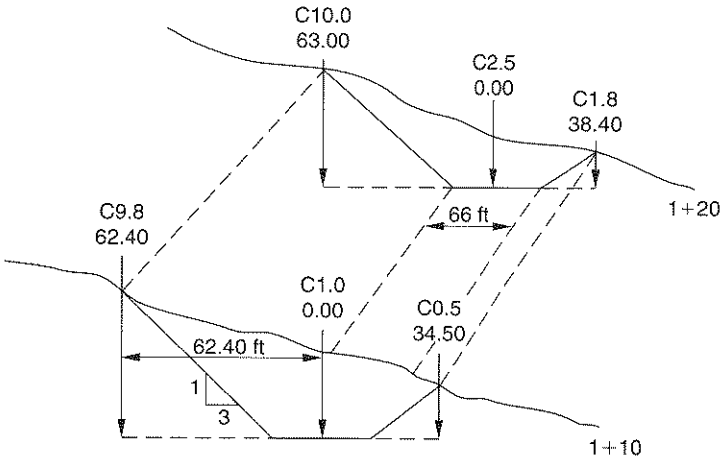

width of the roadbed = 66 ft

side slope ratio = 3:1

1+10	C9.8	C1.0	C0.5
	62.40	0.00	34.50
1+20	C10.0	C2.5	C1.8
	63.00	0.00	38.40

102. Referring to the data, what is the cross-sectional area indicated at stations 1+10 and 1+20, respectively?

(A) 218.40 sq ft and 321.45 sq ft
(B) 193.56 sq ft and 245.13 sq ft
(C) 285.93 sq ft and 308.71 sq ft
(D) 270.99 sq ft and 363.04 sq ft

Solution: One method that can be used to solve this problem is an adaptation of the general method of finding areas by means of coordinates. First add one-half

the width of the roadbed to the cross section of 1+10, then assign algebraic signs as shown. All dimensions are in feet.

0	9.8	1.0	0.5	0
−33.00+	−62.40+	−0.00+	+34.50−	+33.00−

The rule used to find double the area of this cross section states that each upper term will be multiplied by the algebraic sum of the adjacent lower terms. The signs used to determine the algebraic sum are those facing the upper term. These products, added together, will yield double the area of the cross section.

In other words,

$$(0)[(-33.00) + (-62.40)] = 0.00$$
$$(9.8)[(+33.00) + (-0.00)] = 323.40$$
$$(1.0)[(+62.40) + (+34.50)] = 96.90$$
$$(0.5)[(+0.00) + (+33.00)] = 16.50$$
$$(0)[(-34.50) + (-33.00)] = 0.00$$

The sum of the products is double the area of the cross section at 1+10.

$$\begin{array}{r} 0.00 \\ 323.40 \\ 96.90 \\ 16.50 \\ +0.00 \\ \hline 436.80 \end{array} \text{ sq ft}$$

Therefore, divide this sum in half to find the actual area of the cross section.

$$\frac{436.80 \text{ sq ft}}{2} = 218.40 \text{ sq ft}$$

Next, apply the same method to the cross section at station 1+20.

0	10.0	2.5	1.8	0
−33.00+	−63.00+	−0.00+	+38.40−	+33.00−

$$(0)[(-33.00) + (-63.00)] = 0.00$$
$$(10.0)[(+33.00) + (-0.00)] = 330.00$$
$$(2.5)[(+63.00) + (+38.40)] = 253.50$$
$$(1.8)[(+0.00) + (+33.00)] = 59.40$$
$$(0)[(-38.40) + (-33.00)] = 0.00$$

$$\begin{array}{r} 0.00 \\ 330.00 \\ 253.50 \\ 59.40 \\ \underline{+0.00} \\ 642.90 \text{ sq ft} \end{array}$$

$$\frac{642.90 \text{ sq ft}}{2} = 321.45 \text{ sq ft}$$

Answer is (A)

103. Using the average end area method, what is the volume between the cross sections at 1+10 and 1+20?

(A) 100.0 cu yd
(B) 97.2 cu yd
(C) 122.3 cu yd
(D) 106.5 cu yd

Solution: According to the average end area method,

$$V = \left(\frac{A_1 + A_2}{2}\right)\left(\frac{L}{27}\right) \text{ [in cubic yards]}$$

A_1 is the area of the first cross section, A_2 is the area of the second cross section, and L is the distance between them.

$$\begin{aligned} V &= \left(\frac{218.40 \text{ sq ft} + 321.45 \text{ sq ft}}{2}\right)\left(\frac{10}{27}\right) \\ &= \left(\frac{539.85 \text{ sq ft}}{2}\right)\left(\frac{10}{27}\right) \\ (269.925 \text{ sq ft})(0.3704) &= 99.97 \text{ cu yd} \end{aligned}$$

The volume expressed to the nearest tenth of a cubic yard is 100.0 cu yd.

Answer is (A)

104. Using the prismoidal method, what is the volume between the cross sections at 1+10 and 1+20?

(A) 100.2 cu yd
(B) 98.9 cu yd
(C) 101.1 cu yd
(D) 99.8 cu yd

Solution: The prismoidal method requires the construction of a median cross section from the end sections.

0	9.9	1.75	1.15	0
−33.00+	−62.70+	−0.00+	+36.45−	+33.00−

This middle section is found not by averaging the end areas, but by averaging the corresponding linear dimensions. In this case, the dimensions of the cross section at 1+10 were averaged with the cross section at 1+20 to arrive at the coordinates shown.

Find the area of the middle section.

$$(0)[(-33.00) + (-62.70)] = 0.00$$
$$(9.9)[(+33.00) + (-0.00)] = 326.70$$
$$(1.75)[(+62.70) + (+36.45)] = 173.51$$
$$(1.15)[(-0.00) + (+33.00)] = 37.95$$
$$(0)[(-36.45) + (-33.00)] = 0.00$$

$$\begin{array}{r} 0.00 \\ 326.70 \\ 173.51 \\ 37.95 \\ +0.00 \\ \hline 538.16 \text{ sq ft} \end{array}$$

$$\frac{538.16 \text{ sq ft}}{2} = 269.08 \text{ sq ft}$$

The volume can now be found by the prismoidal method, which can be ex pressed as

$$V = \left[\frac{L}{(6)(27)}\right](A_1 + 4A_m + A_2)$$

A_1 is the area of the first cross section, A_2 is the area of the second cross section A_m is the area of the middle section, and L is the distance between the en sections.

$$\begin{aligned} V &= \left(\frac{10}{162}\right)[218.40 \text{ sq ft} + (4)(269.08 \text{ sq ft}) + 321.45 \text{ sq ft}] \\ &= \left(\frac{10}{162}\right)(218.40 \text{ sq ft} + 1076.32 \text{ sq ft} + 321.45 \text{ sq ft}) \\ &= \left(\frac{10}{162}\right)(1616.17 \text{ sq ft}) \\ &= 99.8 \text{ cu yd} \end{aligned}$$

Answer is (D)

105. What is the prismoidal correction that would be applied to the volum found by the average end area to approximate the volume found by the prismoida method?

(A) 0.4 cu yd
(B) 0.1 cu yd
(C) 0.2 cu yd
(D) 0.0 cu yd

Solution: The prismoidal correction may be found by using the formula

$$C = \left(\frac{L}{324}\right)(c_1 - c_2)(w_1 - w_2)$$

c_1 and c_2 are the center heights of the end sections, w_1 and w_2 are the widths from slope intercept to slope intercept of the end sections, and L is the distance between the end sections.

$$\begin{aligned} C &= \left(\frac{10}{324}\right)(1.0 - 2.5)(96.90 - 101.40) \\ &= \left(\frac{10}{324}\right)(-1.5)(-4.5) \\ &= \left(\frac{10}{324}\right)(6.75) \\ &= 0.2 \text{ cu yd} \end{aligned}$$

Answer is (C)

ADJUSTMENTS

106. The calculation of a closed traverse reveals that the closing coordinates of the station from which the traverse began do not match the coordinates assigned to it at the beginning of the calculation. The coordinates are in feet.

N 5000.000
E 10,000.000 (coordinates assigned at the beginning)

N 5000.324
E 9999.871 (closing coordinates of the same station)

Which of the following answers correctly represents the linear error of closure of the traverse and its direction?

(A) 0.453 ft, N31°29′12″E
(B) 0.349 ft, N21°42′36″W
(C) 0.929 ft, N20°31′46″W
(D) 0.698 ft, N68°17′24″E

Solution: The linear error of closure is found using the Pythagorean theorem.

$$\text{linear error of closure} = \sqrt{(\text{difference in N})^2 + (\text{difference in E})^2}$$

$$\text{difference in N} = \begin{array}{r} 5000.324 \\ -5000.000 \\ \hline +0.324 \end{array}$$

$$\text{difference in E} = \begin{array}{r} 9999.871 \\ -10{,}000.000 \\ \hline -0.129 \end{array}$$

$$\sqrt{(0.324\text{ ft})^2 + (0.129\text{ ft})^2} = 0.349\text{ ft linear error of closure}$$

The bearing of the direction of the linear error of closure can be found by using the tangent function.

$$\tan^{-1}\left(\frac{\text{difference in E}}{\text{difference in N}}\right) = \tan^{-1}\left(\frac{0.129\text{ ft}}{0.324\text{ ft}}\right) = 21°42'36''$$

The bearing of the error of closure is N21°42′36″W.

Answer is (B)

107. When a traverse is adjusted by the compass rule, which of the following statements correctly defines the relationship between the correction applied to the departure of one course and the total correction in departure?

(A) It is in the same proportion as that of the length of that course to the entire length of the traverse.

(B) It is in the same proportion as that of the azimuth of that course to the sum of the interior angles of the entire traverse.

(C) It is inversely proportional to the sum of the squares of the lengths of the entire traverse.

(D) It is in the same proportion as that of the length of that course to the arithmetic sum of all the departures.

Solution: The compass rule uses the proportion the length of each leg bears to the entire length of the traverse as the basis of calculating the corrections in both latitude and departure applied to each leg.

Answer is (A)

108. The sum of the interior angles of a closed plane traverse of 12 sides has a theoretically correct value. What is that value?

(A) 2160°
(B) 1980°
(C) 1800°
(D) 1620°

(n-2)(180)

Solution: The sum of the interior angles of a closed plane figure is

$$(n-2)(180°)$$

n is the number of sides of the figure.

In the case of a closed figure of 12 sides, the calculation is

$$(12-2)(180°) = (10)(180°) = 1800°$$

Answer is (C)

109. The sum of the exterior angles of a closed plane traverse with eight sides has a theoretically correct value. What is that value?

(A) 1080°
(B) 1440°
(C) 1620°
(D) 1800°

Solution: The sum of the exterior angles of a closed plane figure is

$$(n+2)(180°)$$

n is the number of sides of the figure.

In the case of a closed figure with eight sides, the calculation is

$$(8+2)(180°) = (10)(180°) = 1800°$$

Answer is (D)

110. Which of the following statements is an assumption appropriate to the compass rule, but not to the transit rule?

(A) It is impossible to exactly determine the magnitude of the random errors in the angles and of a traverse.

(B) The angular measurements are more precise than the distance measurements.

(C) The systematic errors in a traverse have been, as much as is possible, eliminated from the measurements before any adjustment is undertaken.

(D) The effect of the errors in angular measurements is equal to the effect of the errors in the distance measurements.

Solution: The compass rule is widely considered to be superior to the transit rule in balancing a traverse. Both assume that the errors in traversing are random; that is, that systematic errors have been eliminated. However, the transit rule assumes that the angular measurements are superior to the distance measurements, while the compass rule assumes the two types of measurements to be equally reliable.

Answer is (D)

111. What relative error is the closest to that which would be the result of an angular error of 20″?

(A) 1 part in 100,000

(B) 1 part in 20,000

(C) 1 part in 5000

(D) 1 part in 10,000

Solution: The uncertainty of position that results from an angular error of 20″ can be found by means of the inverse of the tangent function.

$$\cot 00°00'20'' = 10{,}313.24$$

Answer is (D)

112. Which of the following statements is not a basis for the adjustment of surveys?

(A) Measurements of the same quantity may agree within very close limits and still be quite inaccurate because of the presence of uncompensated systematic errors.

(B) The effect of random errors can be eliminated from a survey by a properly applied adjustment.

(C) Errors and mistakes are distinctly different in surveying. Mistakes may be entirely avoided, but errors may not.

(D) In some cases, a distribution of the errors in a survey based on the knowledge of the field conditions at the time the measurements were made is superior to a mathematically structured adjustment.

Solution: All the statements except (B) are true. No adjustment can be said to eliminate random errors from a survey.

Answer is (B)

113. While turning six complete sets of angles, direct and reverse, from a triangulation station with a one-second optical theodolite, a surveyor incremented the plate at the start of each new set. The first set backsight was near 0° on the plate, the next set began near 30°, the next near 60°, and so on in increments of 30° until all six sets were complete. Which statement best describes the primary reason for the incrementation?

(A) The incrementation was a correction for refraction and parallax.

(B) The incrementation was an effort to ensure honest note keeping.

(C) The incrementation was an effort to minimize the effect of pointing errors at the backsight station.

(D) The incrementation was an effort to minimize the effect of the systematic error in the plate of the instrument.

Solution: Like all man-made instruments, the plate of an optical reading theodolite is not perfect. The incrementation of the plate prevents imperfections in one

area of the plate from corrupting measurements of the angle. The technique cannot eliminate the effect of the systematic error in the plate; it merely attempts to lessen its effect.

Answer is (D)

114. The interior angles of a closed traverse of six sides are given.

$$\begin{array}{r} 118°15'58'' \\ 93°59'01'' \\ 23°44'10'' \\ 269°21'00'' \\ 98°00'39'' \\ 116°38'12'' \end{array}$$

Each angle has been measured with equal precision. Which of the following angles would be the correct adjusted value for the first angle?

(A) 118°16′08″
(B) 118°15′48″
(C) 118°15′58″
(D) 118°16′15″

Solution: First, find the theoretically correct value for the sum of the interior angles of a six-sided plane figure.

$$(n-2)(180°)$$

n is the number of sides of the figure.

$$(6-2)(180°) = (4)(180°) = 720°$$

The sum of the measured angles of the figure is 719°59′00″.

Next, find the difference between the theoretically correct sum of the interior angles and the sum of the measured interior angles.

$$\begin{array}{r} 720°00'00'' \\ \underline{-719°59'00''} \\ 00°01'00'' \end{array}$$

Since the measured angles are of equal precision, they each are adjusted by one-sixth of the discrepancy, that is, 10 seconds.

Therefore, the adjustment of the first angle is

$$\begin{array}{r} 118°15'58'' \\ +\,10'' \\ \hline 118°16'08'' \end{array}$$

Answer is (A)

115. In surveying, the words *precision* and *accuracy* are not synonymous. Which of the following statements correctly defines the differences between the two terms?

(A) Precision is the degree of agreement between a measurement and the true value; accuracy is the degree of agreement between repetitive measurements of the same value.

(B) Accuracy refers to the final result of a measurement; precision refers to the procedure by which the result was obtained.

(C) Higher precision in an operation tends to indicate reduced random errors; higher accuracy tends to indicate reduced systematic errors.

(D) Both B and C are true.

Solution: The first statement is false. Accuracy is the degree of agreement between a measurement and the true value; precision is the degree of agreement between repetitive measurements of the same value.

Answer is (D)

116. The formula, $\sqrt{\sum v^2}/\sqrt{n-1} = 1\sigma$, where $\sum v^2$ is the sum of the squares of the residuals and n is the number of observations, yields the standard deviation of a series of measurements of a single quantity. What is the percent of probability associated with the standard deviation?

(A) 95%
(B) 99.7%
(C) 68.3%
(D) 90%

Solution: If a single measurement is selected at random from a series of measurements of the same quantity, the percentage of probability is the level of certainty that the measurement will fall within the range represented by the standard deviation. For example, if the standard deviation of a series of measurements of the same quantity was ±0.2 ft, one could be 68.3% sure that any single measurement from that group of measurements would be within ±0.2 ft of the true value.

Answer is (C)

117. If a series of measurements is made of the same quantity, which of the following values is most likely to be closest to the true value?

(A) the median
(B) the mode
(C) the mean
(D) the residual

Solution: The median is the middle value of the measurements arranged in ascending or descending order. The mode is the measurement occurring most frequently. The mean is the sum of the measurements that has been divided by the total number of observations. The mean is the best approximation of the true value.

Answer is (C)

118. Point Allen and point 100 are two adjacent points on a seven-sided unadjusted closed traverse. The state plane coordinates of the points, in feet, are shown below.

Allen:

N 2,125,651.942
E 738,869.199

100:

N 2,132,478.378
E 745,786.469

The sum of the lengths of the traverse, which begins at point Allen, is 63,954.250 ft. The first of the points along the traverse is point 100 and the closing coordinate at point Allen is

N 2,125,652.070
E 738,869.068

The error of closure at point Allen is +0.128 ft in the northing and −0.131 ft in the easting. The unadjusted distance between point Allen and point 100 is 9718.480 ft, and the angles of the traverse are balanced.

Using the compass rule, what are the adjusted coordinates of point 100?

(A) N 2,132,478.398
E 745,786.449

(B) N 2,132,478.412
E 745,786.489

(C) N 2,132,478.319
E 745,786.402

(D) N 2,132,478.359
E 745,786.489

Solution: The compass rule states that the correction applied to the latitude (or departure) of any course is in the same proportion to the total correction in the latitude (or departure) as the length of the course is to the total length of the traverse.

The error of closure in the northing is +0.128 ft; the correction in the northing of point 100 is unknown.

The length of the course from Allen to 100 is 9718.480 ft, and the total length of the traverse is 63,954.250 ft.

$$\frac{9718.480 \text{ ft}}{63{,}954.250 \text{ ft}} = 0.1520$$

The ratio of the length of the course to the sum of the lengths of the traverse is the same as that of the correction of the northing of point 100 to the overall error in the northing.

$$(0.1520)(-0.128 \text{ ft}) = -0.019 \text{ ft}$$

The correction in the easting of point 100 must be in the same proportion.

$$(0.1520)(+0.131 \text{ ft}) = +0.020 \text{ ft}$$

Finally, add these corrections to the coordinates of point 100.

unadjusted northing in feet =	2,132,478.378
correction =	−0.019
adjusted northing of point 100 =	2,132,478.359
unadjusted easting in feet =	745,786.469
correction =	+0.020
adjusted easting of point 100 =	745,786.489

Answer is (D)

119. Three NGS stations, Jackson, Nill, and Red Peak, form a triangle that encloses an area of 131.24 sq mi. The interior angles of this triangle are 52°28′15″, 50°15′10″, and 77°16′32″. Presuming 1 second of spherical excess is accumulated when a figure encloses 75.60 sq mi, which angles represent the correctly adjusted values?

(A) 52°28′16″, 50°15′11″, and 77°16′33″
(B) 52°28′16.″33, 50°15′11.″33, and 77°16′33.″33
(C) 52°28′16.″58, 50°15′11.″58, and 77°16′33.″58
(D) 52°28′15.″42, 50°15′10.″42, and 77°16′32.″42

Solution: First, determine the quantity of spherical excess within the figure from the area it encloses.

$$\frac{131.24 \text{ sq mi}}{75.60 \text{ sq mi}} = 1.74 \text{ sec of spherical excess}$$

The theoretical sum of the angles of a plane triangle is ordinarily 180°00′00″. With the addition of the spherical excess, the sum of the observed angles should be 180°00′01.″74.

Find the sum of the measured angles.

$$\begin{array}{r} 52°28'15'' \\ 50°15'10'' \\ \underline{+77°16'32''} \\ 179°59'57'' \end{array}$$

Find the difference between the sum of the observed angles and the theoretically correct sum.

$$\begin{array}{r} 180°00'01.''74 \\ \underline{-179°59'57.''00} \\ 04.''74 \end{array}$$

The adjustment for each angle is

$$\frac{+04.''74}{3} = +1.''58$$

Answer is (C)

DIRECTIONS

120. What is the south azimuth of a line with a bearing of S10°59′01″E?

(A) 10°59′01″
(B) 349°00′59″
(C) 169°00′59″
(D) 79°00′59″

Solution: Geodetic azimuths are sometimes expressed from south. The rotation of a south azimuth is normally clockwise, just as it is with a north azimuth. In this case, the bearing angle can be subtracted from 360° to find the azimuth from south.

$$\begin{array}{rr} & 360°00'00'' \\ \text{bearing angle} = & \underline{-10°59'01''} \\ \text{azimuth from south} = & 349°00'59'' \end{array}$$

Answer is (B)

121. Occupying point B at the easterly end of a line AB that bears S89°56′15″E a deflection angle of 00°04′15″ is turned to the left to point C. Occupying poin C, a deflection angle of 00°00′35″ is turned to the right to point D. What is th azimuth from north of line CD?

(A) 90°00′00″
(B) 89°56′15″
(C) 89°59′55″
(D) 90°00′05″

Solution: Begin by expressing the direction of line AB as an azimuth from north.

$$\begin{array}{r} 180°00'00'' \\ -89°56'15'' \\ \hline 90°03'45'' \end{array}$$

Find the azimuth of line CD by subtracting deflections to the left and adding deflections to the right.

$$\begin{array}{rr} & 90°03'45'' \\ \text{deflection to the left} = & -00°04'15'' \\ \hline & 89°59'30'' \\ \text{deflection to the right} = & +00°00'35'' \\ \hline & 90°00'05'' \end{array}$$

Answer is (D)

122. Line EF bears N65°14′02″E and line FG bears S75°23′10″E. What is the deflection angle to the right at point F if the direction of the survey is from west to east?

(A) 39°22′48″
(B) 10°09′08″
(C) 50°37′12″
(D) 140°37′12″

Solution: The azimuth of line EF is 65°14′02″, and the azimuth of line FG is

$$\begin{array}{r} 180°00'00'' \\ -75°23'10'' \\ \hline 104°36'50'' \end{array}$$

The deflection angle to the right is the difference between the two azimuths.

$$\begin{array}{r} 104°36'50'' \\ -65°14'02'' \\ \hline 39°22'48'' \end{array}$$

Answer is (A)

123. A surveyor retracing a boundary that was originally established in 1886 using magnetic bearings finds that a particular line has a magnetic bearing of record of N01°20′W, when the magnetic declination was 0°31′E. Today the magnetic declination is 0°12′W, and the true bearing of the same line is N00°09′W. Which pair of angles correctly reflects the difference between the two magnetic bearings of the line and the two true bearings of the line, respectively?

(A) 01°23′ (difference between the magnetic bearings)
00°40′ (difference between the true bearings)

(B) 00°52′ (difference between the magnetic bearings)
00°40′ (difference between the true bearings)

(C) 01°17′ (difference between the magnetic bearings)
00°59′ (difference between the true bearings)

(D) 01°23′ (difference between the magnetic bearings)
00°59′ (difference between the true bearings)

Solution: The true bearing derived from the 1886 magnetic bearing is

$$\begin{array}{rr} \text{magnetic bearing from 1886} = & \text{N01°20′W} \\ \text{eastern declination from 1886} = & \text{00°31′E} \\ \hline \text{derived true bearing} = & \text{N00°49′W} \end{array}$$

The magnetic bearing derived from today's true bearing is

$$\begin{array}{rr} \text{today's western declination} = & \text{00°12′W} \\ \text{today's true bearing} = & -\text{N00°09′W} \\ \hline \text{derived magnetic bearing} = & \text{N00°03′E} \end{array}$$

The differences are

$$\begin{aligned} \text{magnetic bearing from 1886} &= \text{N}01^\circ 20'\text{W} \\ \text{today's magnetic bearing} &= +\text{N}00^\circ 03'\text{W} \\ \hline \text{difference} &= 01^\circ 23' \end{aligned}$$

$$\begin{aligned} \text{today's true bearing} &= \text{N}00^\circ 09'\text{W} \\ \text{true bearing from 1886} &= \text{N}00^\circ 49'\text{W} \\ \hline \text{difference} &= 00^\circ 40' \end{aligned}$$

Answer is (A)

124. The grid azimuth, from north, from NGS station Morrison to NGS station Boulder is $348^\circ 32' 24''.0$. The convergence angle, also known as the theta angle, θ, in the Lambert projection at Morrison is $+00^\circ 10' 53''.2$. What is the geodetic azimuth, from north, from Morrison to Boulder?

(A) $348^\circ 32' 24''.0$
(B) $348^\circ 43' 17''.2$
(C) $348^\circ 21' 30''.8$
(D) $348^\circ 40' 21''.8$

Solution: The following illustration is a general representation of the relationships involved in this problem.

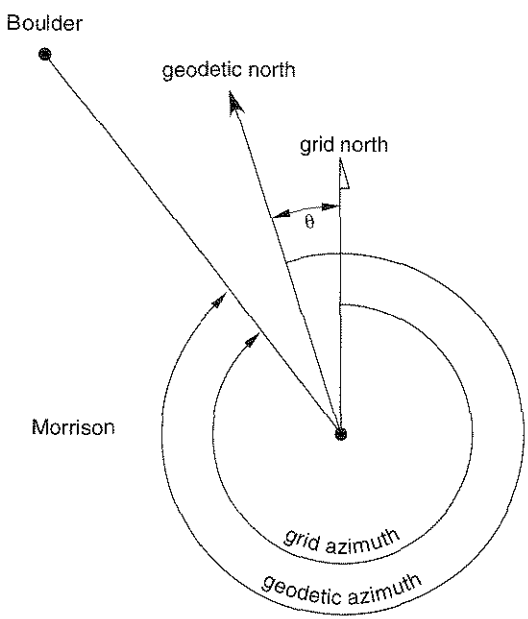

The grid azimuth is measured from grid north, which is parallel to the central meridian of the zone of a plane coordinate projection system. The geodetic azimuth is measured from geodetic north, which coincides with a true spheroidal meridian. The theta angle in the Lambert projection and the alpha angle in the Mercator projection represent the angular difference between grid and geodetic norths.

In this case, the geodetic azimuth is equal to the grid azimuth plus the theta angle, θ.

$$\begin{aligned}\text{geodetic azimuth} &= \text{grid azimuth} + \theta \\ &= 348^\circ 32' 24.''0 + (+00^\circ 10' 53.''2) \\ &= 348^\circ 43' 17.''2\end{aligned}$$

Answer is (B)

125. The deviation of the vertical is an effect that influences the difference between an astronomic azimuth and the geodetic azimuth at a point. Which of the following statements describes an aspect of the deviation of the vertical?

(A) It is the second term correction applied to lines over 5 miles long.
(B) It is an orthometric height.
(C) It is the small angle between a line that is normal to the spheroid through a point and a line through the same point that is normal to the geoid.
(D) It is the angle between an azimuth to Polaris at elongation and an azimuth to Polaris at culmination.

Solution: The orientation of an instrument on the earth's surface is generally considered level when its vertical axis is coincident with the direction of gravity. Therefore, such an orientation is level with respect to the surface called the *geoid*. The geoid is defined by gravity, and is the surface that is perpendicular everywhere to the direction of gravity. On the other hand, the spheroid is an imaginary model of the earth that has no such direct relation to the force of gravity.

Geodetic azimuths are measured from meridians on the spheroid; astronomic azimuths are measured by instruments oriented to the geoid. In other words, up and down are not the same on the geoid as they are on the spheroid. This difference is the deviation of the vertical. This affects the difference between

geodetic and astronomic azimuths, just as using an instrument that is out of level would affect an astronomic observation.

Answer is (C)

126. The published geodetic azimuth, from south, from station Indian to station Douglas is $25°17'49.''11$. If the theta angle at station Indian is $+00°34'37.''61$, what is the grid azimuth, from north, from Douglas to Indian?

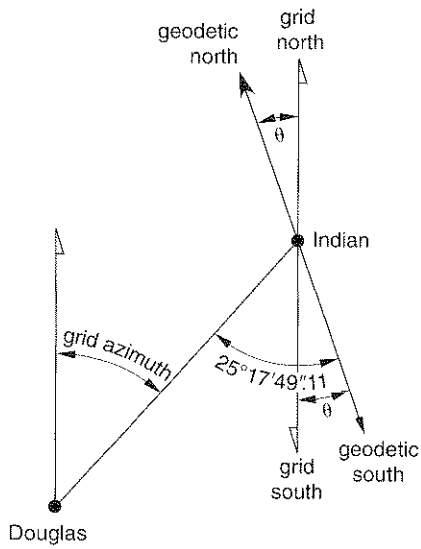

(A) $25°52'26.''72$
(B) $205°52'26.''72$
(C) $24°43'11.''50$
(D) $204°43'11.''50$

Solution: The illustration shows the arrangement of the significant azimuths.

$$\text{geodetic azimuth} - \theta = \text{grid azimuth}$$
$$25°17'49.''11 - (+00°34'37.''61) = 24°43'11.''50$$

The grid azimuth from Indian to Douglas is $24°43'11.''50$ from south. The grid azimuth from Douglas to Indian from grid north is the same value.

Answer is (C)

SLOPE INTERCEPTS

127. Which statement describes the typical position of a slope stake?

(A) Slope stakes are set at the intersection of the profile grade and the natural ground.
(B) Slope stakes are set at the intersection of the natural ground and the side slopes.
(C) Slope stakes are set at each PVC on the centerline of a roadway.
(D) Slope stakes are set at the beginning of a superelevated curve.

Solution: The limits of embankment or excavation along a route are defined by slope stakes. These stakes generally are set at the intersection of the natural ground and the designed side slope.

Answer is (B)

128. A levee built on level ground is parallel to a river channel. The width of the levee on the top is 20 ft. The side slope on the river side is 3:1, and the side slope on the land side is 2:1. The levee is 15 ft high at its center. What is the width of the base of the levee?

(A) 95 ft
(B) 75 ft
(C) 100 ft
(D) 50 ft

Solution: The side slope indicates the ratio of the horizontal distance to the vertical distance, which is usually one. In this case, the first number of each side slope ratio is the number of feet the width of the levee's base increases for each foot of its height.

$$(3\text{ ft})(15\text{ ft}) = 45\text{ ft}$$
$$(2\text{ ft})(15\text{ ft}) = 30\text{ ft}$$
$$\text{width of the levee at the top} = 20\text{ ft}$$

The sum of the values is the width of the levee at its base.

$$\begin{array}{r} 45 \text{ ft} \\ 30 \text{ ft} \\ \underline{+20 \text{ ft}} \\ 95 \text{ ft} \end{array}$$

Answer is (A)

129. The following field data have been used to set a slope stake. The width of the roadway is 60 ft and the side slopes are $1\frac{1}{2}$:1. The elevation of the subgrade is 609.45 ft.

$$\text{HI} = 618.23 \text{ ft}$$
$$\text{ground rod} = 7.3 \text{ ft}$$

What is the distance from the center of the roadway to the slope stake?

(A) 30 ft
(B) 32.22 ft
(C) 34.17 ft
(D) 35.67 ft

Solution: The distance, d, from the centerline of the roadway to the set slope stake can be expressed as

$$d = \frac{w}{2} + hs$$

w is the width of the roadway, h is the difference between the grade rod and the ground rod, and s is the first number in the side slope ratio.

The grade rod is found by subtracting the designed subgrade elevation of the roadway from the HI of the instrument.

$$\begin{aligned} \text{grade rod} &= 618.23 \text{ ft} - 609.45 \text{ ft} \\ &= 8.78 \text{ ft} \end{aligned}$$

This is the rod reading that would indicate that the rod was held exactly at the design elevation of the roadway subgrade.

The ground rod is the rod reading at the existing ground.

$$\begin{aligned} h &= \text{grade rod} - \text{ground rod} \\ &= 8.78 \text{ ft} - 7.3 \text{ ft} \\ &= 1.48 \text{ ft} \end{aligned}$$

$$\begin{aligned} d &= \frac{w}{2} + hs \\ &= \frac{60 \text{ ft}}{2} + (1.48 \text{ ft})(1.5) \\ &= 30 \text{ ft} + 2.22 \text{ ft} \\ &= 32.22 \text{ ft} \end{aligned}$$

Answer is (B)

130. Which of the following best defines the term *angle of repose*?

(A) the angle between the normal of one centerline and the normal of an intersecting centerline
(B) an angle of elevation or depression along a vertical curve
(C) the vertical angle between the true horizon and the perspective center
(D) the angle between the horizontal plane and the slope of the material in a loosely compacted embankment

Solution: The angle of repose varies with the material used in earthwork, but it is always an important element of design. The designed side slopes along a route frequently depend on the appropriate angle of repose for the material available.

Answer is (D)