2 ADVANCED MATHEMATICS

QUADRATIC EQUATIONS

1. A second degree equation in x is a quadratic equation and has the general form

$$ax^2 + bx + c = 0$$

a, b, and c are constants, and a is not equal to zero. A derivation of this general equation expresses x in terms of the other elements shown and is known as the *quadratic formula.* Which of the following mathematical expressions correctly represents the quadratic formula?

(A) $x = a^2 + b + \dfrac{c^2}{4}$

(B) $x = -a \pm \sqrt{\dfrac{b^2 - 4bc}{2c}}$

(C) $x = \dfrac{-b \pm \sqrt{b^2 - 4ac}}{2a}$

(D) $x = -c^2 + 2ab - b^2$

Solution: The quadratic formula is a convenient method to use to solve quadratic equations.

Answer is (C)

2. Which values of x satisfy the expression $9x^2 + 30x + 20 = 0$?

(A) -0.92
(B) 0.13
(C) -2.41
(D) both A and C

Solution: The quadratic formula can be used to solve this equation. The equation is arranged according to the standard form: $a = 9$, $b = 30$, and $c = 20$.

$$\begin{aligned}
x &= \frac{-b \pm \sqrt{b^2 - 4ac}}{2a} \\
&= \frac{-(30) \pm \sqrt{(30)^2 - (4)(9)(20)}}{(2)(9)} \\
&= \frac{-30 \pm \sqrt{900 - 720}}{18} \\
&= \frac{-30 \pm \sqrt{180}}{18} \\
&= \frac{-30 \pm 13.416}{18} \\
&= \frac{-16.584}{18} \quad \text{and} \quad \frac{-43.416}{18} \\
&= -0.92 \quad \text{and} \quad -2.41
\end{aligned}$$

Answer is (D)

3. Which values of x satisfy the expression $201.93 = 6x + 5x^2$?

(A) -6.98 and $+5.78$
(B) -6.98 and $+4.09$
(C) $+5.81$ and $+3.74$
(D) -9.52 and $+5.61$

Solution: First, express the equation in the standard form of a quadratic equation; then derive the values of a, b, and c.

$$\begin{aligned} 201.93 &= 6x + 5x^2 \\ 201.93 - 5x^2 &= 6x \\ 201.93 - 5x^2 - 6x &= 0 \\ -5x^2 - 6x + 201.93 &= 0 \end{aligned}$$

$$\begin{aligned} a &= -5 \\ b &= -6 \\ c &= +201.93 \end{aligned}$$

Next, use the quadratic formula to solve for the values of x that will satisfy the equation.

$$\begin{aligned} x &= \frac{-b \pm \sqrt{b^2 - 4ac}}{2a} \\ &= \frac{-(-6) \pm \sqrt{(-6)^2 - (4)(-5)(201.93)}}{(2)(-5)} \\ &= \frac{+6 \pm \sqrt{36 - (-4038.60)}}{-10} \\ &= \frac{6 + 63.833}{-10} \text{ and } \frac{6 - 63.833}{-10} \\ &= -6.98 \quad \text{and} \quad +5.78 \end{aligned}$$

Answer is (A)

4. Which values correctly represent the base and the height of a right triangle containing 510 sq ft in which the base is 4 ft shorter than the height?

(A) base = 25 ft
height = 29 ft

(B) base = 30 ft
height = 34 ft

(C) base = 16 ft
height = 20 ft

(D) base = 32 ft
height = 36 ft

Solution: The formula for the area of a right triangle is

$$A = \frac{bh}{2}$$

b is the base of the triangle and h is its height. In this case, the base is 4 ft less than the height.

$$\begin{aligned} b &= h - 4 \\ A &= \frac{(h-4)h}{2} = 510 \text{ sq ft} \\ \frac{h^2 - 4h}{2} &= 510 \\ h^2 - 4h &= (510)(2) \\ h^2 - 4h &= 1020 \\ h^2 - 4h - 1020 &= 0 \end{aligned}$$

Use the quadratic formula to find the two roots of the expression.

$$\begin{aligned} h &= \frac{-b \pm \sqrt{b^2 - 4ac}}{2a} \\ &= \frac{-(-4) \pm \sqrt{(-4)^2 - (4)(1)(-1020)}}{(2)(1)} \\ &= \frac{4 \pm \sqrt{16 + 4080}}{2} \\ &= \frac{4+64}{2} \text{ and } \frac{4-64}{2} \\ &= 34 \text{ ft [height]} \\ &= 30 \text{ ft [base]} \end{aligned}$$

Answer is (B)

5. The owner of a rectangular parcel that is 50 ft by 200 ft wishes to double the area of the lot. She wants to acquire a strip of land to add to the end of the lot and another strip of exactly the same width to add to the side of the lot. Which of the following widths will accomplish the goal?

(A) 40.00 ft
(B) 37.12 ft
(C) 52.76 ft
(D) 35.07 ft

Solution: The area of the current lot, the width multiplied by the length, is 10,000 sq ft. The strips of equal width, or x, are to be added to the length and width to double the area.

$$\begin{aligned}(x + \text{length})(x + \text{width}) &= 20{,}000 \text{ sq ft}\\ (x + 200 \text{ ft})(x + 50 \text{ ft}) &= 20{,}000 \text{ sq ft}\\ x^2 + 250x + 10{,}000 &= 20{,}000\\ x^2 + 250x - 10{,}000 &= 0\end{aligned}$$

Use the quadratic formula to solve for x.

$$\begin{aligned}x &= \frac{-b \pm \sqrt{b^2 - 4ac}}{2a}\\ &= \frac{-250 \pm \sqrt{(250)^2 - (4)(1)(-10{,}000)}}{(2)(1)}\\ &= \frac{-250 \pm \sqrt{62{,}500 - (-40{,}000)}}{2}\\ &= \frac{-250 + 320.15}{2} \text{ and } \frac{-250 - 320.15}{2}\\ &= 35.07 \text{ ft and } -285.08 \text{ ft}\end{aligned}$$

The negative root is meaningless in this case. The positive root is correct.

Answer is (D)

SIMULTANEOUS EQUATIONS

6. What is the name usually given to the following type of square array used in solving a system of linear equations?

$$\begin{vmatrix} a & b \\ c & d \end{vmatrix}$$

The equations for the form are

$$ax + by = e$$
$$cx + dy = f$$

(A) a covariant
(B) a cofactor
(C) a determinant
(D) an eigenvector

Solution: A determinant is a convenient abbreviation of the expressions used in solving systems of linear equations. Determinants are useful tools in many other applications as well. They are frequently used in processing Global Positioning System (GPS) data.

Answer is (C)

7. What is the value of the expansion of the following form?

$$\begin{vmatrix} 1 & 9 \\ -6 & -4 \end{vmatrix}$$

(A) 50
(B) −58
(C) 216
(D) 33

Solution: The form for the expansion of such determinants may be represented as

$$\begin{aligned} \begin{vmatrix} a & b \\ c & d \end{vmatrix} &= ad - bc \\ &= (1)(-4) - (9)(-6) \\ &= -4 + 54 \\ &= 50 \end{aligned}$$

Answer is (A)

8. When a determinant is used to solve a system of simultaneous equations where there are just as many equations as there are unknowns, the system has a single solution if the determinant of the coefficients of the unknowns is not zero. The value of each unknown in the system of equations can be written as the quotient of two determinants. How are these two determinants constructed?

(A) The determinant in the denominator is different for each unknown. The denominator is identical to the numerator, with the coefficients of the desired unknown being replaced by the constants. The determinant in the numerator consists of the coefficients of the unknowns.

(B) The determinant in the denominator consists of the coefficients of the unknowns. The determinant in the numerator is different for each unknown. The numerator is identical to the denominator, with the coefficients of the desired unknown being replaced by the constants.

(C) The determinant of the denominator consists of the coefficients of unknowns, but the row or column representing the desired unknown is replaced by any numbers, which are cofactors. The determinant in the numerator is different for each unknown. The numerator is identical to the denominator, with the addition of the coefficients of the desired unknown.

(D) The determinant in the denominator is different for each unknown. The denominator is identical to the numerator, with the addition of the coefficients of the desired unknown. The determinant of the numerator consists of the coefficients of unknowns, but the row or column representing the desired unknown is replaced by any numbers, which are cofactors.

Solution: The following method may be used to solve a system of simultaneous equations where there are just as many equations as there are unknowns and the determinant of the coefficients is not zero.

$$3x + 4y = 17 \quad \text{and} \quad 8x + 12y = 48$$

The denominator consists of the coefficients of the unknowns.

$$\begin{vmatrix} 3 & 4 \\ 8 & 12 \end{vmatrix}$$

The determinant in the numerator is different for each unknown. The numerator is identical to the denominator, with the coefficients of the desired unknown being replaced by the constants.

$$x = \frac{\begin{vmatrix} 17 & 4 \\ 48 & 12 \end{vmatrix}}{\begin{vmatrix} 3 & 4 \\ 8 & 12 \end{vmatrix}}$$

$$y = \frac{\begin{vmatrix} 3 & 17 \\ 8 & 48 \end{vmatrix}}{\begin{vmatrix} 3 & 4 \\ 8 & 12 \end{vmatrix}}$$

Answer is (B)

9. What is the name of the following rule for solving a system of simultaneous equations by the use of determinants?

> When there are just as many equations as there are unknowns, the system has a single solution if the determinant of the coefficients of the unknowns is not zero. The value of each unknown in the system of equations can be written as the quotient of two determinants.
>
> The determinant in the denominator consists of the coefficients of the unknowns.
>
> The determinant in the numerator is different for each unknown. The numerator is identical to the denominator with the coefficients of the desired unknown being replaced by the constants.

(A) Leibniz theorem
(B) Kowa's rule
(C) Cramer's rule
(D) Pratt's axiom

Solution: The method was first described by the Swiss mathematician Cramer.

Answer is (C)

10. What are the values of x and y that will solve the following pair of simultaneous equations?

$$2x - 8y = 8 \quad \text{and} \quad 3x + 4y = 28$$

(A) $x = 16$
$y = 3$
(B) $x = 4$
$y = 4$
(C) $x = 8$
$y = 1$
(D) $x = 10$
$y = 5$

Solution: The equations can be solved by substitution.

$$\begin{array}{r} (2)(3x + 4y = 28) \\ +2x - 8y = 8 \\ \hline \end{array}$$

$$\begin{array}{r} 6x + 8y = 56 \\ +2x - 8y = 8 \\ \hline 8x \qquad = 64 \end{array}$$

$$\begin{aligned} x &= \frac{64}{8} \\ &= 8 \end{aligned}$$

Substituting 8 for x in the equations and solving for y,

$$\begin{aligned} (2)(8) - 8y &= 8 \\ 16 - 8y &= 8 \\ -8y &= 8 - 16 \\ -8y &= -8 \\ \frac{-8y}{-8} &= \frac{-8}{-8} \\ y &= 1 \end{aligned}$$

Another method is to use the determinant.

$$2x - 8y = 8$$
$$3x + 4y = 28$$

$$x = \frac{\begin{vmatrix} 8 & -8 \\ 28 & 12 \end{vmatrix}}{\begin{vmatrix} 2 & -8 \\ 3 & 4 \end{vmatrix}} = \frac{(8)(4) - (28)(-8)}{(2)(4) - (3)(-8)} = \frac{256}{32} = 8$$

$$y = \frac{\begin{vmatrix} 2 & 8 \\ 3 & 28 \end{vmatrix}}{\begin{vmatrix} 2 & -8 \\ 3 & 4 \end{vmatrix}} = \frac{(2)(28) - (3)(8)}{(2)(4) - (3)(-8)} = \frac{32}{32} = 1$$

Answer is (C)

11. What prevents the values of x and y in the following system of equations from being found by the use of determinants?

$$2x - 5y = 10 \quad \text{and} \quad 4x - 20 = 10y$$

(A) The determinant comprised of the coefficients of the unknowns is equal to zero.
(B) There is no solution for x and y in real numbers.
(C) The values of x and y are not integers.
(D) Nothing; the equations can be solved with determinants.

Solution: To use Cramer's rule to solve a system of simultaneous equations, the determinant of the coefficients of the unknowns must not be equal to zero. In this case, it is.

$$\begin{vmatrix} 2 & -5 \\ 4 & -10 \end{vmatrix} = (2)(-10) - (-5)(4) = 0$$

Answer is (A)

12. What is the arrangement and order of the terms for the expansion of the following determinant?

$$\begin{vmatrix} a_1 & b_1 & c_1 \\ a_2 & b_2 & c_2 \\ a_3 & b_3 & c_3 \end{vmatrix}$$

(A) $a_3b_2c_1 + a_1b_3c_2 + a_1b_2c_3 + a_3b_1c_2 + a_2b_3c_1 - a_2b_1c_3$
(B) $a_1b_2c_3 - a_3b_1c_2 + a_2b_3c_1 - a_3b_2c_1 + a_1b_3c_2 - a_2b_1c_3$
(C) $a_2b_3c_1 + a_3b_2c_1 + a_1b_2c_3 - a_3b_1c_2 - a_1b_3c_2 - a_2b_1c_3$
(D) $a_1b_2c_3 + a_3b_1c_2 + a_2b_3c_1 - a_3b_2c_1 - a_1b_3c_2 - a_2b_1c_3$

Solution: The arrangement of the terms for the expansion of a determinant of the third order can be conveniently recalled by arranging the terms as follows.

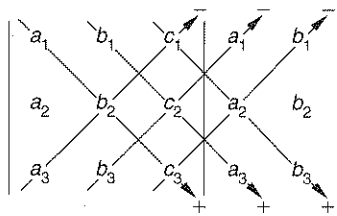

The correct form of the expansion is

$$a_1b_2c_3 + a_3b_1c_2 + a_2b_3c_1 - a_3b_2c_1 - a_1b_3c_2 - a_2b_1c_3$$

Answer is (D)

13. What is the value of the expansion of the following determinant?

$$\begin{vmatrix} 1 & 4 & 2 \\ 4 & 6 & 3 \\ 2 & -1 & 6 \end{vmatrix}$$

(A) 96
(B) −91
(C) 42
(D) −65

Solution: The expansion of the determinant results in the following calculations.

$$(1)(6)(6) + (4)(3)(2) + (2)(4)(-1) - (2)(6)(2) - (-1)(3)(1) - (6)(4)(4)$$

$$\begin{aligned} &= 36 + 24 + (-8) - 24 - (-3) - 96 \\ &= 36 + 24 - 8 - 24 + 3 - 96 \\ &= -65 \end{aligned}$$

Answer is (D)

14. What values of x, y, and z will solve the following system of simultaneous equations?

$$\begin{aligned} 3x + \ \ 2y - 6z &= 65 \\ x + \ \ 3y - \ \ z &= 23 \\ x + 10y + 9z &= -29 \end{aligned}$$

(A) $x = 4$
$y = 6$
$z = -7$

(B) $x = 10$
$y = 1$
$z = -10$

(C) $x = -10$
$y = -1$
$z = -1$

(D) $x = 3$
$y = 4$
$z = -8$

Solution: The arrangement of the determinants that will solve these equations involves a system similar to that used with a pair of equations of two variables each.

$$x = \frac{\begin{vmatrix} 65 & 2 & -6 \\ 23 & 3 & -1 \\ -29 & 10 & 9 \end{vmatrix}}{\begin{vmatrix} 3 & 2 & -6 \\ 1 & 3 & -1 \\ 1 & 10 & 9 \end{vmatrix}}$$

$$= \frac{1755 + 58 + (-1380) - 522 - (-650) - 414}{81 + (-2) + (-60) - (-18) - (-30) - 18}$$

$$= \frac{147}{49} = 3$$

$$y = \frac{\begin{vmatrix} 3 & 65 & -6 \\ 1 & 23 & -1 \\ 1 & -29 & 9 \end{vmatrix}}{\begin{vmatrix} 3 & 2 & -6 \\ 1 & 3 & -1 \\ 1 & 10 & 9 \end{vmatrix}}$$

$$= \frac{621 + (-65) + 174 - (-138) - 87 - 585}{49}$$

$$= \frac{196}{49} = 4$$

$$z = \frac{\begin{vmatrix} 3 & 2 & 65 \\ 1 & 3 & 23 \\ 1 & 10 & -29 \end{vmatrix}}{\begin{vmatrix} 3 & 2 & -6 \\ 1 & 3 & -1 \\ 1 & 10 & 9 \end{vmatrix}}$$

$$= \frac{-261 + 46 + 650 - 195 - 690 - (-58)}{49}$$

$$= \frac{-392}{49} = -8$$

Answer is (D)

AREAS

15. An existing rectangular parcel of land was measured many years ago with a Gunter's chain and was found to contain 40 ac. The original surveyor noted later that the chain used to make the measurements was one link too short. Assuming that the error was evenly distributed throughout the measuring, what was the area of the parcel?

(A) 39.60 ac
(B) 39.20 ac
(C) 40.80 ac
(D) 40.40 ac

Solution: Although the dimensions of the rectangle are not known, the error can be calculated. The original surveyor measured the length, x, and depth, y, of the rectangle and found that $xy = 40$ acres. Since the chain was missing one of its 100 links, however, the length was actually $0.99x$ and the depth $0.99y$. Therefore, the correct area is

$$\begin{aligned} A &= (0.99x)(0.99y) = 0.9801xy \\ &= (0.9801)(40) \\ &= 39.20 \text{ ac} \end{aligned}$$

The same result will be found if the parcel is presumed to be rectangular but not square.

Answer is (B)

16. Two unequal square parcels adjoin one another and the perimeter of both, except for their shared side as shown in the illustration, is enclosed by 560 ft of fencing. The area of both parcels together is 16,400 sq ft. What two ratios of the length of a side of the larger parcel divided by the length of a side of the smaller parcel will satisfy these conditions?

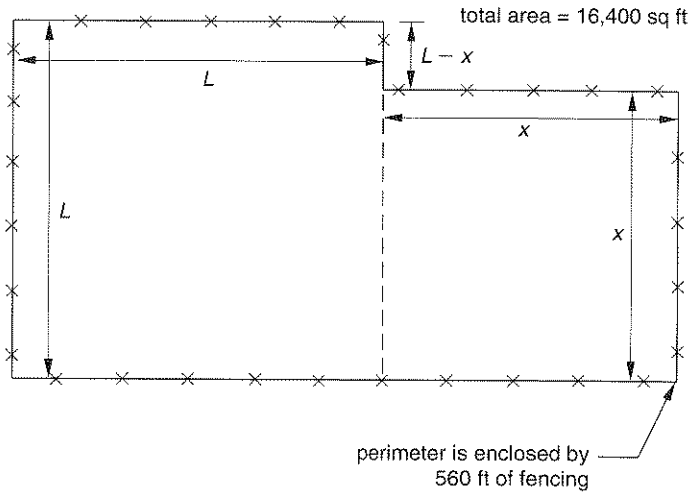

(A) 1.472, 4.152
(B) 1.505, 3.190
(C) 2.189, 2.786
(D) 1.250, 3.875

Solution: Three sides of both the smaller and the larger parcel are components of the 560 ft of fencing. The shared side between the parcels is not fenced.

$$\begin{aligned}
560 \text{ ft} &= 3L + 3x + (L - x) \\
&= 4L + 2x \\
&= (2)(2L + x) \\
2L + x &= \frac{560 \text{ ft}}{2} \\
&= 280 \text{ ft} \\
2L &= 280 - x \\
L &= \frac{280 - x}{2} \\
&= 140 - 0.5x \\
x &= 280 - 2L
\end{aligned}$$

Since the parcels are squares, the area may be expressed as

$$x^2 + L^2 = 16{,}400 \text{ sq ft}$$

Substituting $140 - 0.5x$ for L,

$$\begin{aligned}
16{,}400 \text{ sq ft} &= x^2 + (140 - 0.5x)^2 \\
&= x^2 + (0.25x^2 - 140x + 19{,}600) \\
&= 1.25x^2 - 140x + 19{,}600 \\
16{,}400 - 16{,}400 &= 1.25x^2 - 140x + 19{,}600 - 16{,}400 \\
0 &= 1.25x^2 - 140x + 3200
\end{aligned}$$

This expression can be solved with the quadratic formula.

$$\begin{aligned}
x &= \frac{-b \pm \sqrt{b^2 - 4ac}}{2a} \\
&= \frac{-(-140) \pm \sqrt{(-140)^2 - (4)(1.25)(3200)}}{(2)(1.25)} \\
&= \frac{140 \pm \sqrt{19{,}600 - 16{,}000}}{2.5} \\
&= \frac{140 \pm \sqrt{3600}}{2.5} \\
&= \frac{140 \pm 60}{2.5} \\
&= 32 \quad \text{and} \quad 80
\end{aligned}$$

Since $L = 140 - 0.5x$, the corresponding values of L are

$$\begin{aligned}
L &= 140 - (0.5)(32) \\
&= 140 - 16 \\
&= 124
\end{aligned}$$

and

$$\begin{aligned}
L &= 140 - (0.5)(80) \\
&= 140 - 40 \\
&= 100
\end{aligned}$$

And the required ratios are

$$\frac{L}{x} = \frac{124}{32} = 3.875 \quad \text{or} \quad \frac{L}{x} = \frac{100}{80} = 1.25$$

Answer is (D)

17. What is the area, to the nearest square foot, of an ellipse with a major axis of 284 ft and a minor axis of 152 ft?

(A) 18,145 sq ft
(B) 33,904 sq ft
(C) 38,465 sq ft
(D) 40,746 sq ft

Solution: The area of an ellipse is a mean proportion between the areas of the circle described by its major axis and the circle described by its minor axis. The area of the ellipse can be found by multiplying the area of the two circles together and finding the square root of the product.

$$\begin{aligned}
\text{major axis} &= 284 \text{ ft} \\
\text{radius of the circle} &= 142 \text{ ft} \\
\text{area of the circle} &= \pi r^2 = \pi(142 \text{ ft})^2 \\
&= 63{,}347.07 \text{ sq ft} \\
\text{minor axis} &= 152 \text{ ft} \\
\text{radius of the circle} &= 76 \text{ ft} \\
\text{area of the circle} &= \pi r^2 = \pi(76 \text{ ft})^2 \\
&= 18{,}145.84 \text{ sq ft} \\
(63{,}347.07 \text{ sq ft})(18{,}145.84 \text{ sq ft}) &= 1{,}149{,}485{,}797 \text{ ft}^4 \\
\sqrt{1{,}149{,}485{,}797 \text{ ft}^4} &= 33{,}904 \text{ sq ft}
\end{aligned}$$

A shortcut to finding the area of an ellipse is to multiply the major axis by the minor axis and the factor 0.7854.

$$(284 \text{ ft})(152 \text{ ft})(0.7854) = 33{,}904 \text{ sq ft}$$

Answer is (B)

18. Mr. Gauss sold one acre off the west side of the parcel shown. The deed stipulated that the eastern boundary of that acre be parallel with the western boundary of the parcel. Mr. Gauss is concerned that the house, which is 200 ft perpendicular from the western boundary, may not be on the acre that has been sold. What is the perpendicular distance from the western boundary of the parcel to the eastern boundary of the acre that has been sold?

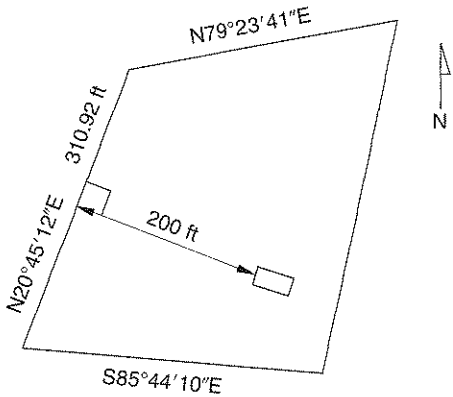

(A) 140.10 ft
(B) 139.21 ft
(C) 135.56 ft
(D) 131.40 ft

Solution: Since its eastern and western boundaries are parallel, the 1 ac parcel is a trapezoid. The area of a trapezoid may be found using the formula

$$A = \frac{(b_1 + b_2)H}{2}$$

The western boundary of the parcel is 310.92 ft. The acreage of the parcel is 1 ac, or 43,560 sq ft.

$$A = 43{,}560 \text{ sq ft} = \frac{(310.92 \text{ ft} + b_2)H}{2}$$

b_2 and H are still unknown.

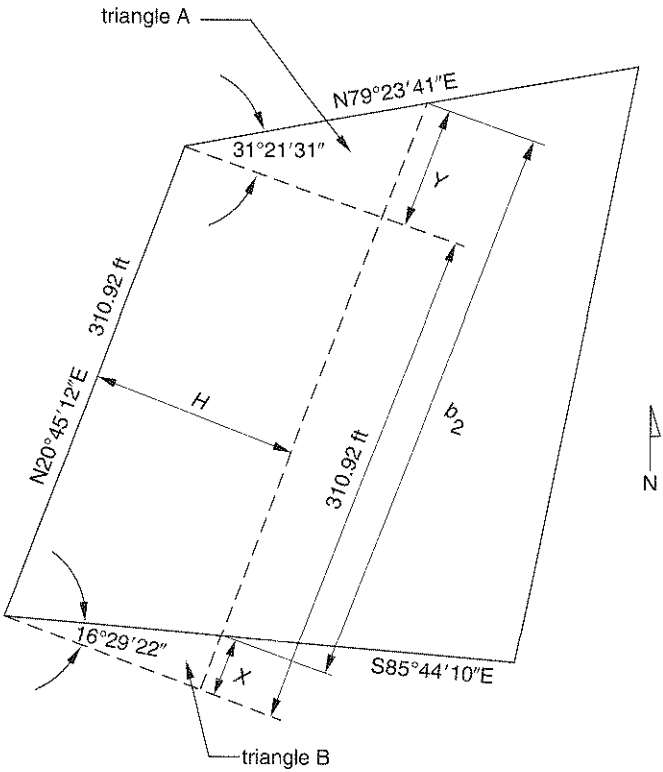

By constructing lines perpendicular to the western boundary of the parcel, two right triangles, labeled A and B, are formed with the altitudes X and Y. First, find the smallest angle of each triangle.

S69°14′48″ is a line perpendicular to the western boundary of the parcel.

$$180° - \text{N}79°23'41''\text{E} + \text{S}69°14'48''\text{E} = 31°21'31''$$

The angle at the western apex of triangle A is 31°21′31″.

$$\text{S}85°44'10''\text{E} - \text{S}69°14'48''\text{E} = 16°29'22''$$

The angle at the western apex of triangle B is 16°29′22″.

Since the base of both right triangles is the unknown H, their altitudes may be expressed as

$$Y = \tan 31°21'31''H$$
$$X = \tan 16°29'22''H$$

The unknown b_2 can now be expressed as

$$\begin{aligned} b_2 &= 310.92 \text{ ft} - X + Y \\ &= 310.92 \text{ ft} - \tan 16°29'22''H + \tan 31°21'31''H \\ &= 310.92 \text{ ft} - 0.2960H + 0.6094H \\ &= 310.92 \text{ ft} + 0.3134H \end{aligned}$$

The formula for the area of the trapezoid can now be expressed with one unknown, H.

$$\begin{aligned} A &= \frac{(b_1 + b_2)H}{2} \\ 43{,}560 \text{ sq ft} &= \frac{[(310.92 \text{ ft}) + (310.92 \text{ ft} + 0.3134H)]H}{2} \\ &= \frac{(621.84 + 0.3134H)H}{2} \\ &= \frac{621.84H + 0.3134H^2}{2} \\ &= 310.92H + 0.1567H^2 \end{aligned}$$

The expression has been reduced to a quadratic equation.

$$0.1567H^2 + 310.92H - 43{,}560 = 0$$

Use the quadratic formula to solve for H.

$$\begin{aligned} H &= \frac{-b \pm \sqrt{b^2 - 4ac}}{2a} \\ &= \frac{-310.92 \pm \sqrt{(310.92)^2 - (4)(0.1567)(-43{,}560)}}{(2)(0.1567)} \\ &= \frac{-310.92 \pm \sqrt{96{,}671.25 - (-27{,}303.41)}}{0.3134} \\ &= \frac{-310.92 \pm \sqrt{123{,}974.66}}{0.3134} \\ &= \frac{-310.92 \pm 352.10}{0.3134} \\ &= 131.40 \quad \text{and} \quad -2115.57 \end{aligned}$$

H is 131.40 ft; the negative value is meaningless.

Answer is (D)

The following two problems refer to the illustration shown.

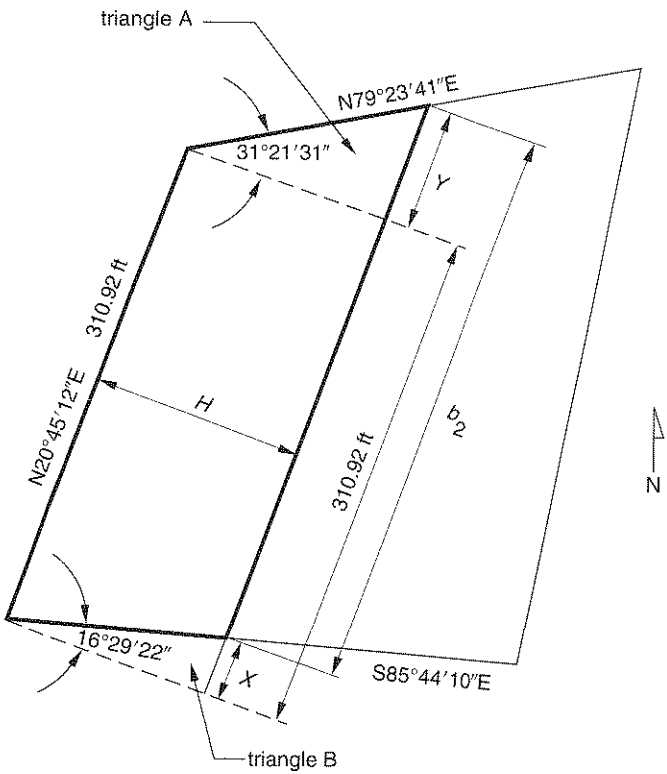

19. What is the length of b_2?

(A) 361.23 ft
(B) 341.62 ft
(C) 352.10 ft
(D) 389.21 ft

Solution: The perpendicular distance H was found to be 131.40 ft in Problem 18. The altitude of triangle A, symbolized by Y, can be found by the calculation

$$Y = \tan 31°21'31'' H = (0.60941)(131.40 \text{ ft}) = 80.08 \text{ ft}$$

The altitude of triangle B, symbolized by X, can be found by the calculation

$$\begin{aligned} Y &= \tan 16°29'22'' H = (0.29601)(131.40 \text{ ft}) = 38.90 \text{ ft} \\ b_2 &= 310.92 \text{ ft} - X + Y = 310.92 \text{ ft} - 38.90 \text{ ft} + 80.08 \text{ ft} \\ &= 352.10 \text{ ft} \end{aligned}$$

Answer is (C)

20. If H in the illustration was 200 ft, what would be the area within the heavy line in the parcel?

(A) 52,971 sq ft
(B) 70,104 sq ft
(C) 63,289 sq ft
(D) 68,452 sq ft

Solution: First, find the altitude of triangle A, symbolized by Y.

$$Y = \tan 31°21'31'' H = (0.60941)(200.00 \text{ ft}) = 121.88 \text{ ft}$$

Then find the altitude of triangle B, symbolized by X.

$$X = \tan 16°29'22'' H = (0.29601)(200.00 \text{ ft}) = 59.20 \text{ ft}$$

Next, find the length of the base of the trapezoid, b_2.

$$\begin{aligned} b_2 &= 310.92 \text{ ft} - X + Y = 310.92 \text{ ft} - 59.20 \text{ ft} + 121.88 \text{ ft} \\ &= 373.60 \text{ ft} \end{aligned}$$

Finally, use the formula for the area of a trapezoid to find the area of the figure.

$$\begin{aligned} A &= \frac{(b_1 + b_2)H}{2} \\ &= \frac{(310.92 \text{ ft} + 373.60 \text{ ft})(200.00 \text{ ft})}{2} \\ &= \frac{(684.52 \text{ ft})(200.00 \text{ ft})}{2} \\ &= \frac{136{,}904 \text{ sq ft}}{2} \\ &= 68{,}452 \text{ sq ft} \end{aligned}$$

Answer is (D)

The following two problems refer to the illustration shown.

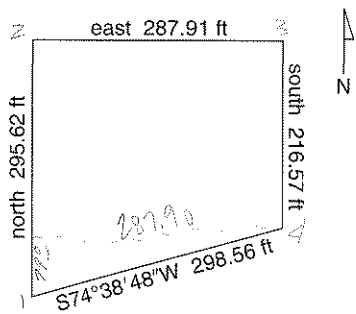

21. The area of the parcel shown is 73,732.31 sq ft. Its owner wishes to divide the parcel into two equal parts. The dividing line must begin at the midpoint of the northern boundary, but it may take any direction that divides the areas into halves. At what distance along the southern boundary from the southwestern corner of the parcel will the dividing line intersect?

(A) 201.45 ft
(B) 167.34 ft
(C) 186.32 ft
(D) 126.24 ft

Solution: First, draw a line from the midpoint of the northern boundary to the southwestern corner of the parcel. The length of the hypotenuse can be found as follows.

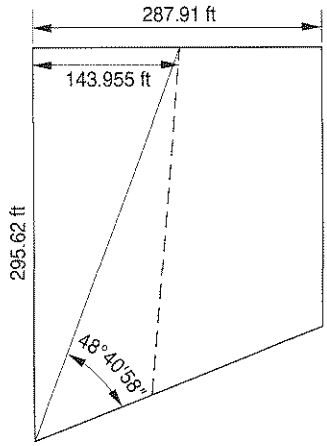

$$\frac{287.91 \text{ ft}}{2} = 143.955 \text{ ft}$$

$$\sqrt{(143.955 \text{ ft})^2 + (295.62 \text{ ft})^2} = 328.81 \text{ ft}$$

The tangent of the angle at the southerly apex of the triangle is

$$\frac{143.955 \text{ ft}}{295.62 \text{ ft}} = 0.48696$$

Therefore, the angle is

$$\arctan 0.48696 = 25°57'51''$$

The area of this triangle is

$$\begin{aligned} A &= \tfrac{1}{2}bh \\ &= \left(\tfrac{1}{2}\right)(143.955 \text{ ft})(295.62 \text{ ft}) \\ &= 21{,}277.99 \text{ sq ft} \end{aligned}$$

This is not quite half of the total area of the parcel.

$$\begin{aligned} \tfrac{1}{2} \text{ total area} &= 36{,}866.155 \text{ sq ft} \\ \text{area of right triangle} &= -21{,}277.99 \text{ sq ft} \\ \hline \text{needed remaining area} &= 15{,}588.165 \text{ sq ft} \end{aligned}$$

To find the dimensions of a triangle that will add the remaining area, use the formula

$$A = \frac{ab \sin c}{2}$$

The angle at the southwest corner of this second triangle is

$$\begin{array}{r} 74°38'49'' \\ -25°57'51'' \\ \hline 48°40'58'' \end{array}$$

One side of this triangle is known to be 328.81 ft. Additionally, its area must be 15,588.165 sq ft.

$$\begin{aligned} 15{,}588.165 \text{ sq ft} &= \frac{(328.81 \text{ ft})b(\sin 48°40'58'')}{2} \\ &= \frac{(246.96 \text{ ft})b}{2} \\ 31{,}176.33 \text{ sq ft} &= (246.96 \text{ ft})b \\ b &= 126.24 \text{ ft} \end{aligned}$$

Answer is (D)

22. What is the length of the line that passes through the midpoint of the northern boundary of the parcel and divides it into halves?

(A) 256.10 ft
(B) 263.14 ft
(C) 287.33 ft
(D) 276.43 ft

Solution: Use the law of cosines to find the length of the line.

$$\begin{aligned} c^2 &= a^2 + b^2 - 2ab \cos C \\ &= (126.24 \text{ ft})^2 + (328.81 \text{ ft})^2 - (2)(126.24 \text{ ft})(328.82 \text{ ft})(\cos 48°40'58'') \\ &= (124{,}052.55 \text{ sq ft}) - (2)(41{,}510.24 \text{ sq ft})(\cos 48°40'58'') \\ &= (124{,}052.55 \text{ sq ft}) - (2)(41{,}510.24 \text{ sq ft})(0.66022) \\ &= 124{,}052.55 \text{ sq ft} - 54{,}812.40 \text{ sq ft} \\ &= 69{,}240.15 \text{ sq ft} \\ c &= 263.14 \text{ ft} \end{aligned}$$

Answer is (B)

23. You have completed the layout of the illustrated reflecting pool and its base. Both are regular polygons. The distances shown are from the midpoint of a side of the pool and the base to their shared center. You have been asked to provide the contractor with the area between the pool and the base for an estimate of the materials needed to cover it. What is the area between the seven-sided heptagonal pool and the eleven-sided undecagonal base?

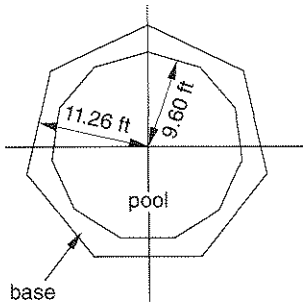

(A) 259.62 sq ft
(B) 185.44 sq ft
(C) 129.81 sq ft
(D) 108.78 sq ft

Solution: First, find the length of a side of the pool and the length of a side of the base. The length of a side of the pool can be calculated by finding the angle subtended at the center of the figure by one-half of a side of the undecagon.

$$\frac{360^\circ}{11} = 32^\circ 43' 38''$$

$$\frac{32^\circ 43' 38''}{2} = 16^\circ 21' 49''$$

Then find the length of a side of the undecagon.

$$(2)(\tan 16^\circ 21' 49'')(9.60 \text{ ft}) = 5.64 \text{ ft}$$

The length of a side of the base can be calculated by finding the angle subtended at the center of the figure by one-half of a side of the heptagon.

$$\frac{360^\circ}{7} = 51^\circ 25' 43''$$

$$\frac{51^\circ 25' 43''}{2} = 25^\circ 42' 51''$$

Then find the length of a side of the undecagon.

$$L = (2)(\tan 25°42'51'')(11.26 \text{ ft}) = 10.85 \text{ ft}$$

The formula for finding the area of a regular polygon is

$$A = \frac{pLn}{2}$$

p is the length of the perpendicular from the midpoint of a side of the polygon to its center, L is the length of a side of the polygon, and n is the number of sides.

The area of the pool is

$$\begin{aligned}\text{area of the undecagon} &= \frac{(9.60 \text{ ft})(5.64 \text{ ft})(11)}{2} \\ &= \frac{595.58 \text{ sq ft}}{2} \\ &= 297.79 \text{ sq ft}\end{aligned}$$

The area of the base is

$$\begin{aligned}\text{area of the heptagon} &= \frac{(11.26 \text{ ft})(10.85 \text{ ft})(7)}{2} \\ &= \frac{855.20 \text{ sq ft}}{2} \\ &= 427.60 \text{ sq ft}\end{aligned}$$

The difference between the two figures is

$$\begin{aligned}\text{area of the base} - \text{area of the pool} &= 427.60 \text{ sq ft} - 297.79 \text{ sq ft} \\ &= 129.81 \text{ sq ft}\end{aligned}$$

Answer is (C)

24. What is the length of the second diagonal of the parcel illustrated?

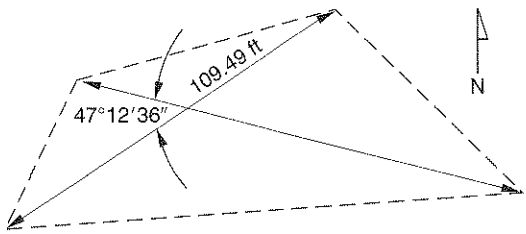

area of parcel = 5046 sq ft

(A) There is not sufficient information available to answer this question.
(B) 150.62 ft
(C) 142.97 ft
(D) 125.60 ft

Solution: The area of any figure enclosed by four straight lines may be found by

$$A = \frac{(\sin\alpha)(D_1)(D_2)}{2}$$

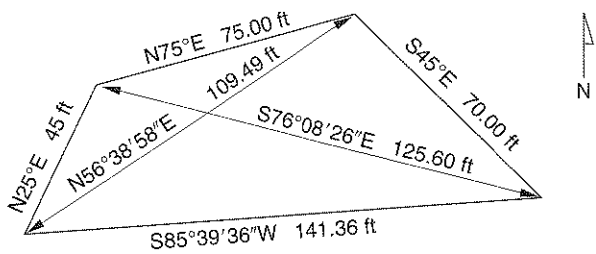

area of parcel = 5046 sq ft

α is the least of the angles formed by the intersection of the diagonals, D_1 is th
length of one of the diagonals, and D_2 is the length of the other diagonal. In thi

case, the area is known and the length of the second diagonal is the value desired. Rearranging the formula,

$$\begin{aligned} D_2 &= \frac{2A}{(\sin\alpha)D_1} \\ &= \frac{(2)(5046 \text{ sq ft})}{(\sin 47°12'36'')(109.49 \text{ ft})} \\ &= \frac{10{,}092 \text{ sq ft}}{80.35 \text{ ft}} \\ &= 125.60 \text{ ft} \end{aligned}$$

Answer is (D)

25. What is the area north of the parabola in the illustration?

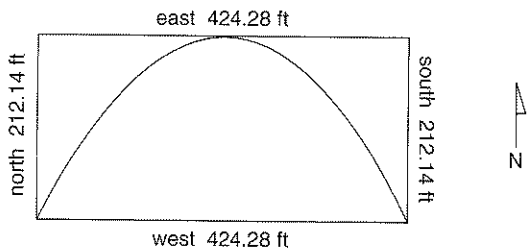

(A) 60,004.5 sq ft
(B) 30,002.2 sq ft
(C) 45,003.4 sq ft
(D) 51,753.9 sq ft

Solution: Applying Archimedes' principle as used in Simpson's one-third rule, the area south of the parabola is two-thirds of the area of the rectangle. The remaining third is north of the parabola.

$$A = \frac{(212.14 \text{ ft})(424.28 \text{ ft})}{3} = 30{,}002.2 \text{ sq ft}$$

Answer is (B)

VERTICAL CURVES

The following two problems refer to the illustration shown.

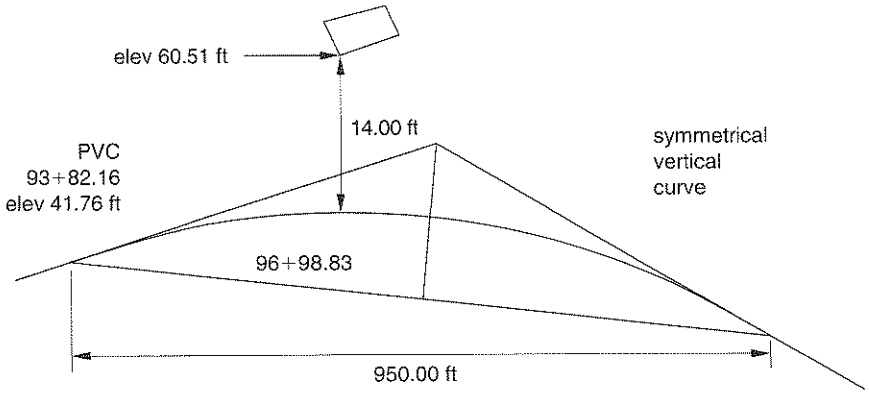

26. A symmetrical vertical curve with an entering grade of +3% and a length of 9.5 full stations must provide 14 ft of clearance under a bridge that passes over it at elev 60.51 ft. The PVC is at sta 93+82.16 and has an elevation of 41.76 ft. Station 96+98.83 on the vertical curve occurs directly below the bridge. What is the exiting grade that will provide the required clearance?

(A) −3%
(B) −3.15%
(C) −4.2%
(D) −6%

Solution: The elevation at sta 96+98.83 must be 14 ft below 60.51 ft, or 46.51 ft. The elevation along the entering grade at sta 96+98.83 may be found as follows.

The distance along the curve from the PVC is 3.1667 sta.

$$\text{PVC} = \begin{array}{r} 96+98.83 \\ \underline{-93+82.16} \\ 3+16.67 \end{array}$$

The entering grade is +3%, so

$$\begin{aligned} (316.67 \text{ ft})(0.03) &= 9.50 \text{ ft} \\ \text{elevation at the PVC} &= 41.76 \text{ ft} \\ & + 9.50 \text{ ft} \\ \hline \text{elevation at 96+98.83 on the tangent} &= 51.26 \text{ ft} \end{aligned}$$

Since the elevation on the vertical curve must be 46.51 ft at sta 96+98.83 and the elevation on the tangent is 51.26 ft, the tangent offset must be

$$\begin{array}{r} 51.26 \text{ ft} \\ -46.51 \text{ ft} \\ \hline 4.75 \text{ ft} \end{array}$$

This information makes it possible to calculate the rate of change along the vertical curve, using the formula

$$\text{tangent offset} = \left(\frac{r}{2}\right) x^2$$

r is the rate of change and x is the distance along the vertical curve in stations.

$$\begin{aligned} \text{tangent offset} &= \left(\frac{r}{2}\right) x^2 \\ r &= \frac{(2)(\text{tangent offset})}{x^2} \\ &= \frac{(2)(-4.75 \text{ ft})}{(3.1667)^2} \\ &= \frac{-9.50 \text{ ft}}{10.028} \\ &= -0.9473 \end{aligned}$$

The rate of change provides the information necessary to find the exit grade, using the formula

$$r = \frac{g_2 - g_1}{L}$$

r is the rate of change, g_2 is the exiting grade, g_1 is the entering grade, and L is the length of the vertical curve in stations.

$$\begin{aligned} r &= \frac{g_2 - g_1}{L} \\ g_2 &= Lr + g_1 \\ &= (9.5 \text{ sta})(-0.9473) + (+3\%) \\ &= -9 + (+3\%) \\ &= -6\% \end{aligned}$$

Answer is (D)

27. What is the station and elevation of the PVT in the vertical curve illustrated?

(A) 103+32.16, 27.51 ft
(B) 110+41.33, 33.47 ft
(C) 102+66.21, 28.64 ft
(D) 101+55.76, 33.21 ft

Solution: The entering grade is +3% for 475 ft, beginning at an elevation of 41.76 ft.

$$\begin{aligned} (475 \text{ ft})(0.03) &= +14.25 \text{ ft} \\ & \ \ 41.76 \text{ ft} \\ & \underline{+14.25 \text{ ft}} \\ \text{elevation of the PVI} &= \ \ 56.01 \text{ ft} \end{aligned}$$

The exiting grade is −6% for 475 ft.

$$\begin{aligned} (475 \text{ ft})(-0.06) &= -28.50 \text{ ft} \\ & \ \ 56.01 \text{ ft} \\ & \underline{(-28.50 \text{ ft})} \\ \text{elevation of the PVI} &= \ \ 27.51 \text{ ft} \end{aligned}$$

The station of the PVT is 950 ft from the PVC.

$$\begin{array}{r} 93{+}82.16 \\ \underline{+9{+}50.00} \\ 103{+}32.16 \end{array}$$

Answer is (A)

28. A manhole is located in a street that has a 4-in parabolic crown. It is 16.16 ft from the centerline and the street is 42 ft wide. What is the elevation of the center of the manhole if the elevation at the street centerline is 277.18 ft?

(A) 277.06 ft
(B) 276.74 ft
(C) 276.85 ft
(D) 276.98 ft

Solution: Begin by drawing a sketch.

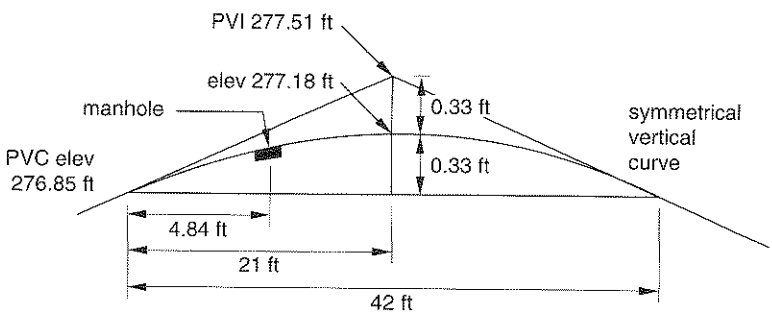

The elevation of the PVC is 4 in (0.33 ft) lower than the crown of the street at the centerline, and the PVI is 0.33 ft higher.

$$\begin{aligned} \text{elevation at the centerline} &= 277.18 \text{ ft} \\ &\underline{+0.33 \text{ ft}} \\ \text{elevation of the PVI} &= 277.51 \text{ ft} \end{aligned}$$

$$\begin{aligned} \text{elevation at the centerline} &= 277.18 \text{ ft} \\ &\underline{-0.33 \text{ ft}} \\ \text{elevation of the PVC} &= 276.85 \text{ ft} \end{aligned}$$

The grade of the tangent is the difference between the elevations of the PVC and the PVI, divided by half the width of the street, or 21 ft.

$$\begin{aligned} \text{elevation of the PVI} &= 277.51 \text{ ft} \\ \text{elevation of the PVC} &= \underline{-276.85 \text{ ft}} \\ & 0.66 \text{ ft} \end{aligned}$$

$$\text{grade} = \frac{0.66 \text{ ft}}{21.00 \text{ ft}} = 0.031$$

The grade along the tangent is 3.1%. The manhole is 16.16 ft from the PVI, and it stands 4.84 ft from the PVC. The elevation on the tangent 4.84 ft from the PVC is calculated as

$$(4.84 \text{ ft})(0.031) = 0.15 \text{ ft}$$

$$\begin{array}{r} 276.85 \text{ ft} \\ \underline{+0.15 \text{ ft}} \\ 277.00 \text{ ft} \end{array}$$

The tangent offset from the tangent to the center of the top of the manhole varies as the square of its distance from the PVC.

$$\begin{aligned} \text{tangent offset} &= \left[\frac{(4.84)^2}{(21.00)^2}\right](0.33 \text{ ft}) \\ &= \left(\frac{23.426}{441.00}\right)(0.33 \text{ ft}) \\ &= (0.0531)(0.33 \text{ ft}) \\ &= 0.0175 \text{ ft} \\ &= 0.02 \text{ ft [rounded to the nearest hundredth of a foot]} \end{aligned}$$

The elevation of the center of the manhole is the elevation of the tangent at that point less the tangent offset.

$$\begin{array}{r} 277.00 \text{ ft} \\ \underline{-0.02 \text{ ft}} \\ 276.98 \text{ ft} \end{array}$$

Answer is (D)

The following four problems refer to the illustration shown.

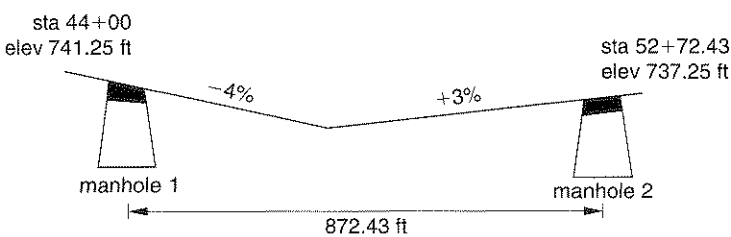

29. A vertical curve must begin at the center of manhole 1 (sta 44+00, elev 741.25 ft) and end at manhole 2 (sta 52+72.43, elev 737.25 ft) as illustrated. The entering grade of −4% and the exiting grade of +3% cannot be changed. At what distance from manhole 1 will the grade −4% intersect the grade +3% from manhole 2?

(A) 431 ft
(B) 440 ft
(C) 429 ft
(D) 441 ft

Solution: The total distance between the manholes is 872.43 ft and the elevation of the PVI must be the same approached from either end of the vertical curve.

$$741.25 \text{ ft} - 0.04x = 737.25 \text{ ft} - (0.03)(872.43 \text{ ft} - x)$$

The elevation at sta 44+00 is 741.25 ft and the elevation at sta 52+72.43 is 737.25 ft. The entering grade is 0.04 and the exiting grade is 0.03. x is the distance from either end of the vertical curve to the PVI.

$$\begin{aligned} 741.25 \text{ ft} - 0.04x &= 737.25 \text{ ft} - (0.03)(872.43 \text{ ft} - x) \\ &= 737.25 \text{ ft} - 26.17 \text{ ft} + 0.03x \\ 0.03x + 0.04x &= 741.25 \text{ ft} - 737.25 \text{ ft} + 26.17 \text{ ft} \\ 0.07x &= 30.17 \text{ ft} \\ x &= 431 \text{ ft} \end{aligned}$$

Answer is (A)

30. Using the same parameters as in Problem 29, design an asymmetrical vertical curve. At what station and upon what line(s) will the CVC be found?

(A) 46+15.50 at the intersection of the entering and the exiting grade
(B) 50+51.715 at the midpoint of the chord connecting the midpoints of the entering grade and the exiting grade
(C) 48+31.00 on the chord connecting the midpoints of the entering grade and the exiting grade
(D) 47+23.25 at the intersection of the entering and the exiting grade

Solution: The two elements of the asymmetrical vertical curve that meet the requirements outlined are 431.00 ft and 441.43 ft long. The first begins at the PVC and ends at the CVC and sta 48+31.00.

$$\begin{aligned} \text{PVC} &= 44{+}00.00 \\ &\underline{\ {+}431.00 \text{ ft}} \\ \text{CVC} &= 48{+}31.00 \end{aligned}$$

The CVC is found on the chord connecting the midpoints of the entering grade and the exiting grade.

Answer is (C)

31. What are the stations and elevations of the PVIs of the vertical curves that make up the asymmetrical vertical curve illustrated?

(A) sta 48+31.00, elev 724.01 ft
sta 41+23.25, elev 728.32 ft

(B) sta 48+31.00, elev 724.01 ft
sta 49+41.36, elev 727.32 ft

(C) sta 41+23.25, elev 728.32 ft
sta 49+41.36, elev 727.32 ft

(D) sta 46+15.50, elev 732.63 ft
sta 50+51.715, elev 730.63 ft

Solution: The station of PVI_1 is

$$\begin{aligned} \text{PVC} &= 44{+}00.00 \\ \text{half of first vertical curve} &= \underline{+\ 215.50 \text{ ft}} \\ \text{PVI}_1 &= 46{+}15.50 \end{aligned}$$

The station of PVI_2 is

$$\begin{aligned} \text{PVT} &= 52{+}72.43 \\ \text{half of second vertical curve} &= \underline{-\ 220.715 \text{ ft}} \\ \text{PVI}_2 &= 50{+}51.715 \end{aligned}$$

The elevation of PVI_1 can be calculated by multiplying one-half of the first vertical curve by the grade of the first tangent.

$$(215.50 \text{ ft})(-0.04) = -8.62 \text{ ft}$$

$$\begin{aligned} \text{elevation of PVC} &= 741.25 \text{ ft} \\ &\ +(-8.62 \text{ ft}) \\ \hline \text{elevation of PVI}_1 &= 732.63 \text{ ft} \end{aligned}$$

The elevation of PVI_2 can be calculated by multiplying one-half of the second vertical curve by the grade of the first tangent from the PVT.

$$(220.715 \text{ ft})(-0.03) = -6.62 \text{ ft}$$

$$\begin{aligned} \text{elevation of PVT} &= 737.25 \text{ ft} \\ &\ +(-6.62 \text{ ft}) \\ \hline \text{elevation of PVI}_2 &= 730.63 \text{ ft} \end{aligned}$$

Answer is (D)

32. What is the grade of the line connecting the PVI of the first vertical curve with the PVI of the second vertical curve through the asymmetrical curve?

(A) −0.46%
(B) 5%
(C) −0.33%
(D) 3.3%

Solution: The station and elevation of PVI_1 are

$$\begin{aligned} \text{sta} &\ \ 46{+}15.50 \\ \text{elev} &\ \ 732.63 \text{ ft} \end{aligned}$$

The station and elevation of PVI_2 are

$$\begin{aligned} \text{sta} &\ \ 50{+}51.715 \\ \text{elev} &\ \ 730.63 \text{ ft} \end{aligned}$$

The horizontal distance between the two is

$$\begin{array}{r} 50{+}51.715 \\ -46{+}15.50 \\ \hline 436.215 \text{ ft} \end{array}$$

The vertical distance between them is

$$\begin{array}{r} 730.63 \text{ ft} \\ -732.63 \text{ ft} \\ \hline -2.00 \text{ ft} \end{array}$$

Therefore, the grade from PVI_1 to PVI_2 is

$$\frac{-2.00 \text{ ft}}{436.215 \text{ ft}} = -0.0046 = -0.46\%$$

Answer is (A)

The following three problems refer to the illustration shown.

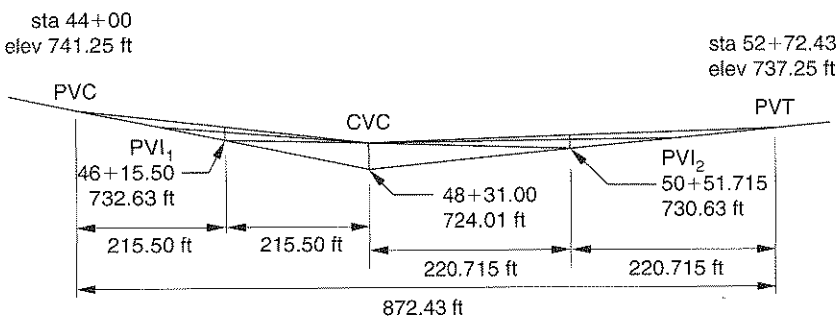

33. What are the rates of change of the two vertical curves?

(A) first vertical curve = 0.802
second vertical curve = −0.802

(B) first vertical curve = −0.139
second vertical curve = 1.721

(C) first vertical curve = 1.624
second vertical curve = 1.586

(D) first vertical curve = 0.821
second vertical curve = 0.784

Solution: The formula for the rate of change, r, along a vertical curve is

$$\frac{g_2 - g_1}{L}$$

g_2 is the exiting grade, g_1 is the entering grade, and L is the length of the vertical curve.

For curve 1, the entering grade is -4%, the exiting grade is -0.46%, and the length is 431.00 ft.

$$\begin{aligned} r &= \frac{(-0.46) - (-4.00)}{4.3100 \text{ sta}} \\ &= \frac{3.54}{4.3100 \text{ sta}} = 0.821 \end{aligned}$$

For curve 2, the entering grade is -0.46%, the exiting grade is $+3.00\%$, and the length is 441.43 ft.

$$\begin{aligned} r &= \frac{(+3.00) - (-0.46)}{4.4143 \text{ sta}} \\ &= \frac{3.46}{4.4143 \text{ sta}} = 0.784 \end{aligned}$$

Answer is (D)

34. A cross-pan drainage structure is to be built on the roadway that follows the asymmetrical vertical curve illustrated. At what station should the pan be constructed?

(A) 48+31.00
(B) 50+57.33
(C) 48+89.67
(D) 46+15.50

Solution: The drainage structure should be located at the lowest point of the entire asymmetrical vertical curve. Although this is possible, the lowest point may be less likely to occur on the first curve of the two since both of its grades are negative: -4% and -0.46%. Therefore, the first attempt to find the lowest point is conducted on the second of the two curves whose grades are -0.46% and $+3\%$.

The formula for calculating the lowest point of a vertical curve is

$$\text{distance in stations} = \frac{-g_1}{r}$$

g_1 is the entering grade and r is the rate of change.

The rate of change of the second curve is 0.784 and the entering grade is −0.46%.

$$\begin{aligned}\text{distance in stations} &= \frac{-(-0.46\%)}{0.784}\\ &= 0.5867\end{aligned}$$

The distance, d, from the CVC to the lowest point of the asymmetrical vertical curve is 58.67 ft.

The station may be calculated as follows.

$$\begin{aligned}\text{station of CVC} &= 48{+}31.00\\ d &= \underline{\quad +58.67\text{ ft}}\\ \text{station of lowest point} &= 48{+}89.67\end{aligned}$$

Answer is (C)

35. What is the elevation of the lowest point on the asymmetrical vertical curve illustrated?

(A) 731.50 ft
(B) 731.52 ft
(C) 731.59 ft
(D) 731.60 ft

Solution: The CVC occurs at a distance of 215.50 ft from PVI_1, along a tangent whose slope is −0.46%.

$$(215.50\text{ ft})(-0.0046) = -0.99\text{ ft}$$

$$\begin{aligned}\text{station of PVI}_1 &= 732.63\text{ ft}\\ &\underline{+(-0.99\text{ ft})}\\ \text{elevation of CVC} &= 731.64\text{ ft}\end{aligned}$$

The lowest point of the curve occurs at sta 48+89.67, or 58.67 ft from the CVC. Therefore, the elevation of the lowest point is calculated by

$$\text{elevation} = \left(\frac{r}{2}\right)x^2 + g_1 + \text{elevation of CVC}$$

r is the rate of change, x is the distance along the curve to the lowest point in stations, and g_1 is the entering grade.

$$\begin{aligned}
\text{elevation} &= \left(\frac{0.784}{2}\right)(0.5867)^2 + (-0.46)(0.5867) + 731.64 \text{ ft} \\
&= \left(\frac{0.784}{2}\right)(0.3442) + (-0.2700) + 731.64 \text{ ft} \\
&= 0.1349 + (-0.2700) + 731.64 \text{ ft} \\
&= -0.1351 + 731.64 \text{ ft} \\
&= 731.50 \text{ ft}
\end{aligned}$$

Answer is (A)

CURVE SUPERELEVATION

36. When a highway is superelevated around a curve, which statement best describes the usual treatment of the centerline, inner edge, and outer edge of that curve?

(A) The inner edge is maintained at grade, the centerline is raised by half of the superelevation, and the outer edge is raised by half of the superelevation.

(B) The inner edge is lowered by half of the superelevation, the centerline is maintained at grade, and the outer edge is raised by half of the superelevation.

(C) The inner edge is maintained at grade, the centerline is maintained at grade, and the outer edge is raised by the superelevation distance.

(D) The inner edge is lowered by the superelevation distance, the centerline is maintained at grade, and the outer edge is maintained at grade.

Solution: Generally, the superelevation of highway curves is accomplished by lowering the inner edge of the roadway by half of the superelevation distance. The centerline is maintained at grade, and the outer edge is raised by half of the superelevation distance. On railroad work, the inner rail is maintained at grade, and the outer rail is superelevated.

Answer is (B)

37. What is the usual treatment of the crown of the pavement around a superelevated curve of more than 1° of curve?

(A) The usual convex crown of the pavement is continued around the curve to provide a banking effect on the inner lane.

(B) The crown is gradually changed from convex to concave in the middle of the superelevated curve.

(C) The crown is gradually changed from a convex crown to a plane-inclined surface in the middle of the curve.

(D) The crown becomes concave immediately at the beginning of the curve and continues to the end.

Solution: The usual convex crown of pavement would provide a slight banking effect for the inner lane of a superelevated curve, but it would have the opposite effect on the outer lane. The usual practice is to gradually change the convex crown to a plane-inclined surface in the middle of the curve and gradually return to the convex crown as the curve ends.

Answer is (C)

38. Which statement best describes the meaning of the friction factor as used in the design of superelevated curves?

(A) The friction factor is a variable used to increase the extent of the transverse slope of a superelevated curve based on the centripetal force acting on the vehicle traveling around the curve.

(B) The friction factor is a quantification of the centrifugal force acting on a vehicle traveling around a superelevated curve that is used to calculate the length of the curve.

(C) The friction factor is a variable used to reduce the superelevation of a curve to prevent a vehicle traveling around the curve from skidding inward.

(D) The friction factor is a variable value based on the impedance of a vehicle traveling around a superelevated curve and is used to calculate the length of the curve.

Solution: The friction factor is variable and is dependent on the condition of the pavement and the speed of the vehicles traveling on a highway, among other things. It is used in the calculation of the transverse slope of a superelevated curve in order to prevent vehicles from skidding inward while traveling along the curve.

Answer is (C)

The following two problems refer to the illustration shown.

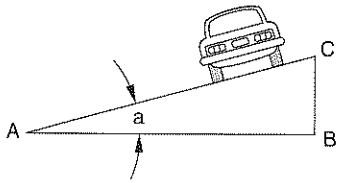

39. A superelevated curve has a radius of 1000 ft with a vehicle at the middle of a curve. The superelevation was designed for a speed of 70 mph and a friction factor of 0.10. What is angle a to the nearest tenth of a degree?

(A) 30.6°
(B) 26.0°
(C) 21.5°
(D) 12.8°

Solution: The formula used to solve this type of problem is

$$\tan a = \frac{V^2}{15r} - f$$

V is the design speed in miles per hour, r is the radius of the curve, f is the friction factor, and a is the angle of the transverse slope.

$$\begin{aligned}
\tan a &= \frac{V^2}{15r} - f \\
&= \frac{(70)^2}{(15)(1000\text{ ft})} - 0.10 \\
&= \frac{4900}{15{,}000\text{ ft}} - 0.10 \\
&= 0.3267 - 0.10 \\
&= 0.2267 \\
a &= 12.8^\circ
\end{aligned}$$

Answer is (D)

40. Assume that the design speed for a superelevated curve is 70 mph and the maximum transverse slope is tan 12.8°, or 0.2267. Under these conditions, what is the minimum length of the spiral curve through which the superelevation should occur?

(A) 2387 ft
(B) 1163 ft
(C) 1469 ft
(D) 1775 ft

Solution: Several methods are used to calculate the minimum length of the spiral curve under these conditions. One formula is

$$L = 73.3\,VS$$

L is the minimum length of the spiral curve, V is the design speed of the curve in miles per hour, and S is the maximum transverse slope.

$$\begin{aligned} L &= (73.3)(70)(0.2267) \\ &= (73.3)(15.869) \\ &= 1163 \text{ ft} \end{aligned}$$

Answer is (B)

41. What is the superelevation of the outer rail above the inner rail of a 2° railroad curve with a 70 mph design speed if the friction factor is neglected?

(A) $8\frac{1}{2}$ in

(B) $7\frac{1}{4}$ in

(C) $6\frac{1}{2}$ in

(D) $5\frac{1}{4}$ in

Solution: The most commonly used formula for calculating the superelevation of railroad curves is

$$\text{superelevation of outer rail in inches} = 0.00066DV^2$$

D is the degree of curve, and V is the design speed.

$$\begin{aligned} \text{superelevation of outer rail in inches} &= (0.00066)(2^\circ)(70)^2 \\ &= (0.00066)(9800) \\ &= 6\tfrac{1}{2} \text{ in} \end{aligned}$$

Answer is (C)

42. What is the minimum length of a railroad spiral curve where the superelevation of the outer rail is $4\frac{1}{2}$ in above the inner rail and the design speed is 60 mph?

(A) 317 ft
(B) 340 ft
(C) 364 ft
(D) 387 ft

Solution: The usual formula used to calculate the minimum length of railroad spiral is

$$\text{minimum railroad spiral length} = -1.173ED$$

E is the superelevation of the outer rail over the inner rail in inches, and D is the design speed in miles per hour.

$$\begin{aligned}\text{minimum railroad spiral length} &= (1.173)\left(4\tfrac{1}{2}\right)(60)\\ &= (1.173)(270)\\ &= 317 \text{ ft}\end{aligned}$$

Answer is (A)

SPIRAL CURVES

43. What is a spiral curve, as used in surveying?

(A) A spiral curve is also known as a *compound circular curve.*
(B) A spiral curve is a hyperbolic curve in the horizontal plane.
(C) A spiral curve is a loxodrome.
(D) A spiral curve is a curve with a uniformly varying radius.

Solution: A spiral curve, as used in surveying, is a curve whose radius is constantly increasing or decreasing at a uniform rate as the curve continues. There are several mathematical solutions of spiral curves.

Answer is (D)

44. Which statement best defines the usual purpose of an easement curve?

(A) An easement curve is commonly used in the layout of railroad and highway right-of-ways to accommodate the routes of large circular curves.

(B) An easement curve, also known as a *transition spiral curve*, is used to introduce a circular curve and the centrifugal force associated with it.

(C) An easement curve, also known as a *cubic spiral*, is most often used instead of a circular curve in railroads.

(D) An easement curve, also known as a *clothoid* or *Euler spiral*, is used in conjunction with other spiral curves in routes that must follow steep grades.

Solution: Transition spirals, or easement curves, are most frequently used to gradually carry vehicles from a straight to curved path.

Answer is (B)

45. Which of the following abbreviations are arranged in the proper order for the transition from a tangent through a spiral curve to a circular curve, followed by a return from the circular curve through a spiral curve to a tangent?

(A) SC
TS
ST
CS

(B) TS
ST
SC
CS

(C) CS
TS
ST
SC

(D) TS
SC
CS
ST

Solution: The meanings of the abbreviations are

TS	tangent to spiral
SC	spiral to circular curve
CS	circular curve to spiral
ST	spiral to tangent

Answer is (D)

The following eight problems refer to the illustration shown.

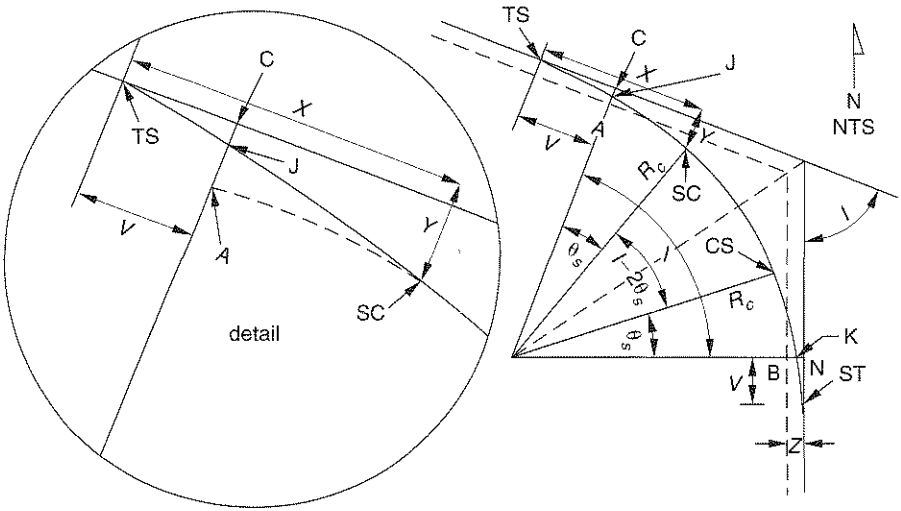

46. Which statement best describes the distance CJ in the transition spiral?

(A) The distance CJ is equal to $R_c \operatorname{vers} \theta_s$.

(B) The distance CJ is equal to $R_c + Z \sec\left(\frac{1}{2}I\right) - R_c$.

(C) The distance CJ is equal to $R_c + Z \sec\left(\frac{1}{2}\theta_s\right) - R_c$.

(D) The distance CJ is approximately one-half of the distance CA.

Solution: A convenient approximation that may be used with transition spiral curves is that the distance indicated as CJ is approximately one-half of the distance CA.

Answer is (D)

47. The circular curve in the center of the figure has been shifted to make room for the transition spirals TS to SC and CS to ST. Assume that R_c is equal to 1000.00 ft, Y is equal to 30.00 ft, and θ_s is equal to 10°. What is the length of the shift, distance CA?

(A) 6.97 ft
(B) 8.87 ft
(C) 10.85 ft
(D) 14.81 ft

Solution: The formula best suited to solve this problem is

$$\text{CA} = Y - R_c \operatorname{vers} \theta_s$$

R_c is the radius of the circular curve beginning at SC and θ_s is the spiral angle.

$$\begin{aligned}\text{CA} &= 30.00 \text{ ft} - (1000.00 \text{ ft}) \operatorname{vers} 10^\circ \\ &= 30.00 \text{ ft} - (1000.00 \text{ ft})(0.01519) \\ &= 30.00 \text{ ft} - 15.19 \text{ ft} \\ &= 14.81 \text{ ft}\end{aligned}$$

Answer is (D)

48. Assume that R_c is equal to 955.00 ft, X is equal to 398.20 ft, and θ_s is equal to 12°. What is the length of the distance V?

(A) 266.47 ft
(B) 216.35 ft
(C) 199.65 ft
(D) 249.62 ft

Solution: The formula best suited to solve this problem is

$$V = X - R_c \sin \theta_s$$

R_c is the radius of the circular curve beginning at SC and θ_s is the spiral angle.

$$\begin{aligned}\text{CA} &= 398.20\text{ ft} - (955.00\text{ ft})\sin 12^\circ \\ &= 398.20\text{ ft} - (955.00\text{ ft})(0.20791) \\ &= 398.20\text{ ft} - 198.55\text{ ft} \\ &= 199.65\text{ ft}\end{aligned}$$

Answer is (C)

49. Assume that R_c is equal to 955.00 ft, X is equal to 398.20 ft, and θ_s is equal to 12°. What is the length of the spiral transition curve TS to SC?

(A) 399.30 ft
(B) 397.10 ft
(C) 404.21 ft
(D) 400.02 ft

Solution: The most convenient formula for this calculation is

$$\text{length of spiral} = 2R_c\theta_s$$

R_c is the radius of the circular curve beginning at SC, and θ_s is the spiral angle in radians.

$$\begin{aligned}\text{length of spiral} &= (2)(955.00\text{ ft})\left(\frac{12^\circ}{57^\circ 17' 44.''90}\right) \\ &= (2)(955.00\text{ ft})(0.20944) \\ &= (2)(200.01\text{ ft}) \\ &= 400.02\text{ ft}\end{aligned}$$

Answer is (D)

50. Which of the following statements concerning the detail in the illustration is correct?

(A) The length of the spiral curve TS to SC is three times longer than the circular arc of the angle θ_s with the radius R_c.
(B) The line CA very nearly bisects the spiral curve from TS to SC.
(C) The distance labeled Y is known as the throw and is equal to CA sec $\left(\frac{1}{2}I\right)$.
(D) The spiral curve TS to SC is a cubic cycloid.

Solution: Another convenient approximation is that the distance from TS to J along the spiral curve is very nearly equal to the distance from J to SC.

Answer is (B)

51. Assume that the degree of curve of the circular portion of the arc is 8° and the length of the spiral curve is 583.54 ft. Under these conditions, what is the spiral angle θ_s?

(A) 12°14′52″
(B) 18°42′15″
(C) 20°45′31″
(D) 23°20′30″

Solution: The most convenient formula for the calculation of the spiral angle when the degree of curve and the length of the spiral are known is

$$\theta_s = \left(\frac{\text{spiral curve length}}{200}\right)(\text{degree of curve})$$

θ_s is the spiral angle.

$$\begin{aligned}\theta_s &= \left(\frac{583.54\text{ ft}}{200}\right)(8^\circ)\\ &= (2.917)(8^\circ)\\ &= 23^\circ 20' 30''\end{aligned}$$

Answer is (D)

52. Perpendicular offsets along the spiral curve from TS to J may be constructed from the tangent line to the spiral curve for layout. These offsets may be checked approximately by using which of the following relationships?

(A) The offsets should vary in proportion to the square of the distance from TS.
(B) The offsets should vary in proportion to the cube of the distance from TS.
(C) The offsets should vary inversely to the distance from TS.
(D) The offsets should decrease exponentially as the distance from TS.

Solution: A transition spiral is similar to a cubic parabola. The offsets from the tangent from TS to J are roughly proportional to the cubes of the distances from TS.

Answer is (B)

53. Assume that the offset, distance CA, is 24.60 ft and the I angle is 20°. What is the throw of the curve—the shift inward radially from the PI?

(A) 24.98 ft
(B) 24.79 ft
(C) 24.63 ft
(D) 24.41 ft

Solution: The formula that is most convenient in finding such a radial shift is

$$\begin{aligned}\text{shift} &= \text{CA} \sec\left(\tfrac{1}{2}I\right)\\ &= (24.60\text{ ft}) \sec\left[\left(\tfrac{1}{2}\right)(20^\circ)\right]\\ &= (24.60)(1.0154)\\ &= 24.98\text{ ft}\end{aligned}$$

Answer is (A)

The following two problems refer to the illustration shown.

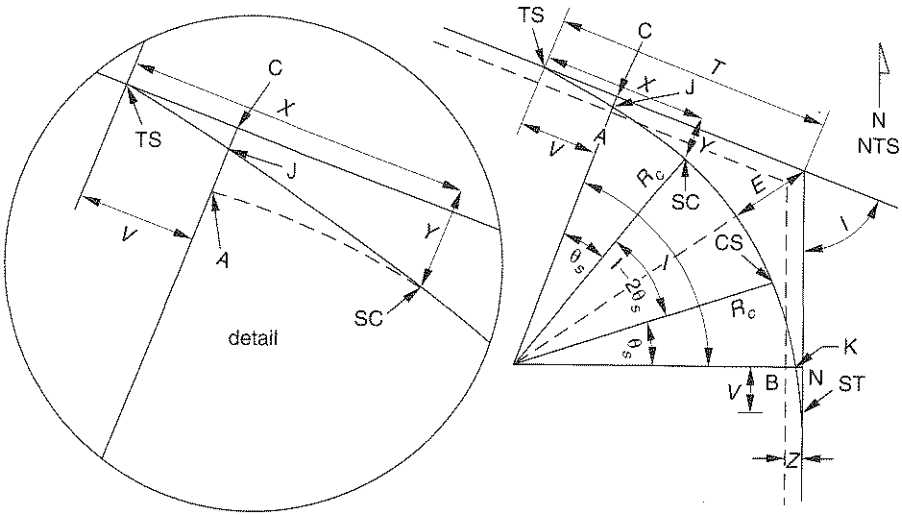

54. Considering the curve illustrated, assume that R_c is equal to 955.00 ft, the I angle is 40°, and the distance CA is 6.95 ft. What is the external distance labeled E?

(A) 72.33 ft
(B) 70.85 ft
(C) 64.18 ft
(D) 68.69 ft

Solution: The formula best suited for finding the external distance is

$$\begin{aligned}
E &= (R_c + \text{CA}) \sec\left(\tfrac{1}{2}I\right) - R_c \\
&= (955.00 \text{ ft} + 6.95 \text{ ft}) \sec\left[\left(\tfrac{1}{2}\right)(40°)\right] - 955.00 \text{ ft} \\
&= (961.95 \text{ ft}) \sec\left[\left(\tfrac{1}{2}\right)(40°)\right] - 955.00 \text{ ft} \\
&= (961.95 \text{ ft}) \sec 20° - 955.00 \text{ ft} \\
&= (961.95 \text{ ft})(1.06418) - 955.00 \text{ ft} \\
&= 1023.69 \text{ ft} - 955.00 \text{ ft} \\
&= 68.69 \text{ ft}
\end{aligned}$$

Answer is (D)

55. Considering the curve illustrated, assume that R_c is equal to 955.00 ft, the I angle is 40°, the distance CA is 6.95 ft, and the distance labeled V is 199.65 ft. What is the tangent distance labeled T?

(A) 553.00 ft
(B) 531.87 ft
(C) 549.77 ft
(D) 563.76 ft

Solution: The formula best suited for finding the tangent distance is

$$\begin{aligned}
T &= (R_c + \text{CA}) \tan\left(\tfrac{1}{2}I\right) + V \\
&= (955.00 \text{ ft} + 6.95 \text{ ft}) \tan\left[\left(\tfrac{1}{2}\right)(40^\circ)\right] + 199.65 \text{ ft} \\
&= (961.95 \text{ ft}) \tan\left[\left(\tfrac{1}{2}\right)(40^\circ)\right] + 199.65 \text{ ft} \\
&= (961.95 \text{ ft}) \tan 20^\circ + 199.65 \text{ ft} \\
&= (961.95 \text{ ft})(0.36397) + 199.65 \text{ ft} \\
&= 350.12 \text{ ft} + 199.65 \text{ ft} \\
&= 549.77 \text{ ft}
\end{aligned}$$

Answer is (C)