6 SURVEYING INSTRUMENTS AND PROCEDURES

DEFINITIONS

1. Which of the following statements is true of plane surveying?

(A) Plane surveying disregards the curvature of the earth.
(B) As the size of the area increases, the accuracy and precision of plane surveying decreases.
(C) The term *plane surveying* is reserved for surveys whose results are expressed in state plane coordinates.
(D) Both A and B are true.

Solution: Plane surveying differs from geodetic surveying in the treatment of the curvature of the earth. Plane surveying is conducted with a horizontal plane as its reference surface, whereas geodetic surveying takes curvature into account.

Answer is (D)

2. The four points of the compass—north, south, east, and west—are known by what common name?

(A) occidental directions
(B) collimation directions
(C) oriental directions
(D) cardinal directions

Solution: The four principal points of the compass are known as the *cardina directions*.

Answer is (D)

3. Which of the following scales is not included on a standard triangular engineer's scale?

(A) 1 in = 50 ft
(B) 1 in = 100 ft
(C) 1 in = 10 ft
(D) 1 in = 40 ft

Solution: The standard scales available on the triangular engineer's scale include 10, 20, 30, 40, 50, and 60, but not 100.

Answer is (B)

4. The standard gauge of railroad tracks in the U.S. is normally measured between points $\frac{5}{8}$ in below the top of the rails. What is the standard railroad gauge within the U.S.?

(A) 5 ft
(B) 4 ft, $6\frac{1}{4}$ in
(C) 4.60 ft
(D) 4 ft, $8\frac{1}{2}$ in

Solution: While narrow- and broad-gauge railroad tracks exist, 4 ft, $8\frac{1}{2}$ in is standard and is sometimes marked on steel tapes for reference.

Answer is (D)

5. Which of the following quantities may be properly measured in miner's inches?

(A) the depth of a shaft
(B) the weight of ore
(C) the density of a mineral
(D) the rate of flow of water

Solution: A miner's inch is an approximate measurement of rate of flow. Generally speaking, a miner's inch equals a rate of flow of about 1.5 cu ft per minute.

Answer is (D)

FIELD NOTES

6. When a number has been recorded in a field book in error, the correction of the entry is best accomplished by which of the following procedures?

(A) erasing the error and rewriting
(B) writing the correct number over the error
(C) voiding the entire page
(D) drawing a line through the error and rewriting the proper value above

Solution: Erasing entries in a field book is not good practice. Information recorded in a field book should remain legible even if it appears to be in error. The technique of lining through incorrect entries is widely accepted. The correct values are then written above those in error.

Answer is (D)

7. A measurement of 3.90 ft is recorded in a surveyor's field notes. Which of the following assumptions is supported by this entry?

(A) The measurement was made to the nearest hundredth.
(B) The measurement was made to the nearest tenth.
(C) The measurement was estimated.
(D) The measurement was made to the nearest hundredth but is only significant to the nearest tenth.

Solution: Even though the last digit is zero, the entry indicates that the measurement is significant to the nearest hundredth.

Answer is (A)

THE COMPASS

8. To which of the following charts should a surveyor refer to determine the approximate magnetic declination in a particular location?

(A) an isogradient chart
(B) an isohaline chart
(C) an isomagnetic chart
(D) an isogonic chart

Solution: An isogonic chart is a map connecting points of equal magnetic declination. Reference to such a chart is one way to determine approximate magnetic declination.

Answer is (D)

9. Which of the following variations does not affect the magnetic declination at a place over time?

(A) secular variation
(B) annual variation
(C) daily variation
(D) constant variation

Solution: Secular variation is the very gradual change in magnetic declination that follows cycles of approximately 300 years. The annual, or yearly, variation is generally less than a minute of arc throughout the U.S. The daily variation is an easterly movement early in the day, followed by a corresponding westerly movement, reaching a maximum change of about 8 min of arc. Irregular variations are caused by magnetic storms that in most instances result from sunspot activity. Constant variation is an invention. There is no category of magnetic variation called *constant*.

Answer is (D)

10. A line observed in 1911 had a magnetic bearing of N10°24′E, and the magnetic declination at that time was 04°E. What will the magnetic bearing of the line be today if the declination is 00°25′W?

(A) N14°31′E
(B) N05°59′E
(C) N09°50′E
(D) N14°49′E

Solution: The true bearing of the line in 1911 can be found by adding the declination to the magnetic bearing.

$$\text{N}10°24'\text{E} + 04°00' = \text{N}14°24'\text{E}$$

The magnetic bearing today must be larger than the true bearing since the declination is now west of north. The magnetic bearing can be found by adding the present declination to the true bearing.

$$\text{N}14°24'\text{E} + 00°25' = \text{N}14°49'\text{E}$$

Answer is (D)

OPTICS

11. If the image of a well-defined dot appears to be a blurred circle when observed through a lens system, which of the following terms best defines the defect?

(A) coma
(B) chromatic aberration
(C) astigmatism
(D) spherical aberration

Solution: Spherical aberration causes light passing through a lens to focus at more than one point.

Answer is (D)

12. Which of the following statements correctly defines the effect of atmospheric refraction?

(A) Generally, refraction makes objects appear lower than they actually are.
(B) As the density of the air increases, refraction decreases.
(C) Generally, refraction makes objects appear higher than they actually are.
(D) Both A and B are true.

Solution: The arc of a ray of light passing from one point to another is generally not the same as the curve of the earth's surface between them. The radius of the arc of the ray of light is nearly seven times greater than the radius of the curve of the earth. The resulting effect, known as *refraction*, tends to make objects appear higher than they really are. Refraction increases as the density of the medium through which light passes increases.

Answer is (C)

13. A surveyor is looking through an instrument at a target 2 mi away. The instrument and the target are both standing in warm air masses, but the line of sight passes over a lake between them that is $\frac{1}{4}$ mi wide. The air over the lake is considerably cooler than the air at the instrument or the target. Which statement best describes the effect of the cooler air on the line of sight?

(A) There is no effect—air pressure influences refraction, not temperature.
(B) The line of sight will be subject to less refraction in the cooler air than in the warmer air.
(C) The line of sight will be refracted equally throughout is length.
(D) The line of sight will be subject to more refraction in the cooler air than in the warmer air.

Solution: When light moves from a less dense to a more dense medium, the refraction increases. Cool air is more dense than warm air; therefore, refraction will increase over the lake.

Answer is (D)

14. When looking through the telescope of a particular instrument after focusing, an observer finds that if the eye is shifted slightly, the cross hairs appear to move with respect to the object being sighted. What is the cause of this effect and what should be done about it?

(A) The effect is due to normal refraction and nothing can be done to eliminate it.
(B) The effect is known as *parallax* and the instrument should be adjusted to eliminate it.
(C) The effect is known as *halation* and the instrument should be adjusted to eliminate it.
(D) The effect is caused by heat waves and nothing can be done to eliminate it.

Solution: If the cross hairs appear to move with respect to the target when an observer looks through the telescope of an instrument, the condition is known as *parallax*. Parallax occurs when the image created by the lens lies in front of or behind the plane of the cross hairs. It can be remedied by adjustment.

Answer is (B)

15. Two types of eyepieces are generally used in surveying instruments: erecting and inverting. Which of the following correctly represents the arrangement of lenses appropriate to each?

(A) two convex lenses: inverting
one convex lens: erecting

(B) four concave lenses: erecting
two convex lenses: inverting

(C) two concave lenses: inverting
four convex lenses: erecting

(D) two convex lenses: inverting
four convex lenses: erecting

Solution: Usually four convex lenses constitute an erecting eyepiece and two convex lenses constitute an inverting eyepiece. Because it has fewer lenses, an inverting eyepiece provides slightly superior optical acuity, but is not widely used in the U.S.

Answer is (D)

16. The image produced by a particular instrument is obscured by various hues of light. What is the name given to this condition?

(A) coma
(B) lacuna distortion
(C) chromatic aberration
(D) precession

Solution: Chromatic aberration is caused by different elements of the spectrum being diverted differently as they pass through a lens.

Answer is (C)

17. What objective lens design is used to minimize both spherical and chromatic aberrations in the optical systems of many surveying instruments?

(A) a double-convex objective lens
(B) a single-coated objective lens
(C) a compound lens of crown glass and flint glass
(D) a polarizing filter

Solution: The combination of a double-convex lens of crown glass and an inner concavo-convex lens of flint glass tends to minimize the effects of both spherical and chromatic aberration.

Answer is (C)

18. Which of the following ranges of magnification includes most surveying telescopes?

(A) 5 to 12 diameters
(B) 5 to 35 diameters
(C) 18 to 42 diameters
(D) 46 to 71 diameters

Solution: Surveying instruments tend to have rather low magnification in order to minimize increasing the effect of heat waves, turbulence, and vibration on observations. Greater magnification also reduces the field of view and is, therefore, undesirable in most surveying work. Most instruments have magnification between 18 and 42 diameters.

Answer is (C)

THE LEVEL AND THE ROD

19. Which of the following statements is true of self-reading level rods?

(A) The graduations on a self-reading rod increase from the top to the bottom of the rod.

(B) A self-reading rod requires the rodman to set and read movable targets in accordance with signals from the instrument operator.

(C) Self-reading rods are graduated to allow the instrument operator to read them clearly.

(D) The graduated strip on a self-reading rod is movable and may be set at a particular rod reading to allow reading of elevations directly without calculation.

Solution: Self-reading rods are sometimes called *speaking rods*. They are graduated to allow the instrument operator to read them. Target level rods are read by the rodman and are not widely used.

Answer is (C)

20. One of the most common level rods used today is the Philadelphia rod. Which of the following properties applies to the Philadelphia rod?

(A) The Philadelphia rod usually has three sections.

(B) When not extended, both the front and back of a Philadelphia rod are graduated.

(C) The Philadelphia rod accommodates readings up to 7 ft without extension.

(D) Both B and C are true.

Solution: A Philadelphia rod has two sections and is graduated on both sides up to 7 ft. Extended, the rod usually reaches 13 ft.

Answer is (D)

21. After rough level is achieved with the three screws of a third-order automatic, or self-leveling, level, how is the instrument brought to more precise level?

(A) The instrument is tilted about a ball and socket fulcrum by means of one screw.

(B) The line of sight through the instrument is kept level by means of a compensator mechanism consisting of prisms on a pendulum.

(C) The instrument is brought into precise level by manipulating a micrometer until the two halves of a coincidence bubble are brought together.

(D) The instrument is kept level by slight adjustments of the three screws of the leveling head so as to keep the bull's-eye bubble within its etched circle.

Solution: The compensator built into most automatic levels consists of an arrangement of three prisms that is allowed to swing like a pendulum. This dampened mechanism maintains a horizontal line of sight even when the telescope barrel is not precisely level.

Answer is (B)

GRADING AND LEVELING

22. What is the purpose of the procedure known as *waving the rod*?

(A) The rod is waved to make sure that the joint clamps have been properly tightened.

(B) The rodman finds the vertical position of the rod by waving it before the instrument operator makes any attempt to read it. Once the vertical position is found, the rod is held steady for reading.

(C) The procedure causes the rod reading to rise and fall so that its lowest value may be read by the instrument operator.

(D) The rod is waved to check the focus of the instrument.

Solution: When no rod bubble is available, waving the rod is one technique for verifying that the reading is taken with the rod in a vertical position. While facing the instrument operator, the rodman slowly rocks the rod forward and back. The lowest reading occurs when the rod is vertical.

Answer is (C)

23. When running differential levels, it is good practice to balance the sights. What is the purpose of this procedure?

(A) Balancing the lengths of the foresights and backsights in a level circuit minimizes the effect of a line of sight that is not perfectly horizontal.
(B) Balancing the lengths of the foresights and backsights in a level circuit compensates for the effect of parallax.
(C) Balancing the lengths of the foresights and backsights in a level circuit minimizes the effect of any inconsistency in plumbing the rod.
(D) Balancing the lengths of the foresights and backsights in a level circuit minimizes the effect of refraction.

Solution: Errors due to the lack of a perfectly horizontal line of sight tend to cancel each other out if the foresight and backsight are roughly equal in length.

Answer is (A)

24. How can the elevation of an intermediate turning point be calculated from the usual note format of differential levels?

(A) subtract the backsight from the height of instrument
(B) add the foresight to the height of instrument
(C) subtract the foresight from the height of instrument
(D) add the backsight to the previous benchmark

Solution: The reading on the foresight (FS) is subtracted from the height of the instrument (HI) to find the elevation of an intermediate turning point (TP).

Answer is (C)

25. A level circuit must cross a river with a width of approximately 800 ft. It is not possible to set up the instrument anywhere but on the banks. What method would be useful in such a situation?

(A) The observations are best made on an overcast day when the temperature and atmospheric conditions are stable.

(B) Two rods, or even two instruments, used to make simultaneous observations would improve the results.

(C) Readings taken to turning points on both sides of the river from first one, and then the other, bank would allow two determinations of the difference in elevations of the two points.

(D) A, B, and C are useful.

Solution: The procedure known as *reciprocal leveling* is useful in such situations. The level is set up on one side of the river, near a turning point on which a rod is held. Simultaneously, another rod is held on a turning point on the far side of the river. Observing the rods in close succession allows the calculation of the difference in elevation between the two turning points while minimizing the effects of refraction. By moving the instrument to the far bank of the river and repeating the procedure, the difference in elevation is determined again. These two differences will likely be unequal. The mean of the two differences will closely approximate the actual change in elevation between the two turning points.

Answer is (D)

26. What main advantage might be gained by using two rods and two rodmen in running a level circuit?

(A) The systematic error is reduced.

(B) The walking distance is less for the rodmen.

(C) The need to mark turning points on the ground is eliminated.

(D) The need to balance the backsights and foresights is eliminated.

Solution: The use of two rods and two rodmen, known as *double-rodding*, can reduce the effect of systematic error in a level circuit. The instrument operator can take the backsight and the foresight in more rapid succession if a rod is held on both turning points simultaneously. The atmospheric effects on the line of sight are thereby reduced. If the rodmen alternate on the foresights and backsights, the error in each rod is also commpensated for.

Answer is (A)

27. How far must the top of a fully extended 13.00-ft rod deviate from plumb to cause an error of +0.02 ft in a 7.00 rod reading?

(A) 0.98 ft
(B) 0.51 ft
(C) 0.23 ft
(D) 1.06 ft

Solution: To cause an error of 0.02 ft at 7.00 ft, the angle by which the rod deviates from vertical can be found by

$$\cos\alpha = \frac{7.00 \text{ ft}}{7.02 \text{ ft}}$$

Angle α is the angle of the rod.

$$\cos\alpha = 0.997151$$
$$\alpha = 04°19'34''$$

This angle can now be used to find the distance from plumb at the top of the 13.00-ft rod.

$$(\sin 04°19'34'')(13.00 \text{ ft}) = 0.98 \text{ ft}$$

Answer is (A)

28. A level is set midway between BM A and BM B. The rod readings from this position are A = 1.35 ft and B = 4.14 ft. The level is then moved very close to A and the rod readings from this position are A = 4.46 ft and B = 7.12 ft. What rod reading at BM B from the second position would indicate that the level is in proper adjustment?

(A) 6.99 ft
(B) 6.95 ft
(C) 7.25 ft
(D) 7.12 ft

Solution: The rod readings taken with the level midway between BM A and BM B show that the true difference between their elevations is

$$4.14 \text{ ft} - 1.35 \text{ ft} = 2.79 \text{ ft}$$

This is the best indication of the true difference because the sights are balanced.

When the instrument is moved very close to BM A, the difference between the readings is

$$7.12 \text{ ft} - 4.46 \text{ ft} = 2.66 \text{ ft}$$

The error is presumed to occur in the longer sight, to BM B. The error is

$$\begin{array}{r} 2.79 \text{ ft} \\ \underline{-2.66 \text{ ft}} \\ 0.13 \text{ ft} \end{array}$$

Therefore, if the instrument were in perfect adjustment, the expected reading at BM B would be

$$\begin{array}{r} 7.12 \text{ ft} \\ \underline{+0.13 \text{ ft}} \\ 7.25 \text{ ft} \end{array}$$

Answer is (C)

29. Which of the following series of numbers would correctly replace those indicated by the letters X, Y, and Z on the field notebook page shown?

STA	BS	HI	FS	ELEV	
BM A				210.01	
	U	211.99			
TP 1			3.61	V	
	7.53	215.91			
TP 2			W	211.61	
	5.77	X			
TP 3			6.15	211.23	
	Y	214.74			
BM B			Z	209.43	
	6.35	215.78			
TP 4			7.55	208.23	
	2.21	210.44			
TP 5			4.90	205.54	
	7.33	212.87			
TP 6			1.21	211.66	
	5.10	216.76			
BM A			6.69	210.07	

(A) X = 217.38
Y = 4.65
Z = 5.51

(B) X = 230.38
Y = 3.12
Z = 4.10

(C) X = 216.21
Y = 2.09
Z = 5.51

(D) X = 217.38
Y = 3.51
Z = 5.31

Solution: Backsights are added to the previous elevation to find the height of the instrument (HI). Foresights are subtracted from the HI to find the elevation. Reversing the process in each case will allow the determination of the BS from the HI and the FS from the elevation.

STA	BS	HI	FS	ELEV	
BM A				210.01	
	1.98	211.99			
TP 1			3.61	208.38	
	7.53	215.91			
TP 2			4.30	211.61	
	5.77	217.38			
TP 3			6.15	211.23	
	3.51	214.74			
BM B			5.31	209.43	
	6.35	215.78			
TP 4			7.55	208.23	
	2.21	210.44			
TP 5			4.90	205.54	
	7.33	212.87			
TP 6			1.21	211.66	
	5.10	216.76			
BM A			6.69	210.07	

Answer is (D)

30. Given the following two observations, what are the rod readings in each case? Are the rods an equal distance from the observer?

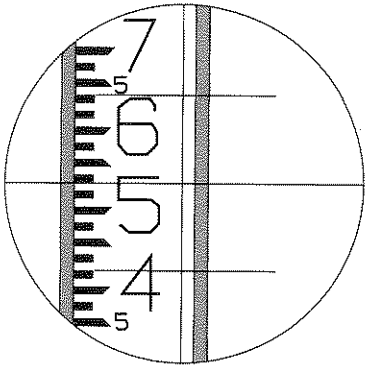

rod 1

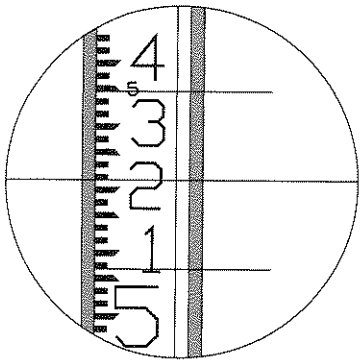

rod 2

(A) rod 1 = 5.35
rod 2 = 5.64
The rods are an equal distance from the observer.

(B) rod 1 = 5.21
rod 2 = 5.54
The rods are an unequal distance from the observer.

(C) rod 1 = 5.21
rod 2 = 5.53
Rod 1 is closer to the observer than rod 2.

(D) rod 1 = 5.53
rod 2 = 5.21
Rod 1 is closer to the observer than rod 2.

Solution: The rod reading at the center hair is 5.21 for rod 2 and 5.53 for rod 1. The approximate distance to the rod can be determined by the interval between the upper and the lower stadia hairs. The interval is smaller for rod 1. Therefore, rod 1 is closer to the observer.

Answer is (D)

The following three problems refer to the illustration shown.

		THREE-WIRE LEVELING			
STA	BS	THREAD	FS	THREAD	ELEV
		INT		INT	
BM X					1609.350
	6.739		7.529		
	5.365	1.374	6.328	1.201	
	3.988	1.377	5.133	1.195	
3	16.092	2.751 3	18.990	2.396	
	5.364		6.330		
TP 1	3.898		8.486		
	2.375	1.523	6.990	1.496	
	0.850	1.525	5.491	1.499	
3	7.123	3.048 3	20.967	2.995	
	2.374		6.989		

The work was done with a rod calibrated in feet. The level's stadia interval factor was 100.

31. What is the elevation of TP1?

(A) 1608.387 ft
(B) 1608.385 ft
(C) 1608.384 ft
(D) 1610.316 ft

Solution: The sum of the readings at the three cross hairs is divided by three to find the value used in the calculation of the elevations. For example, the HI for the first backsight is calculated using 5.364, the mean value, rather than 5.365, the reading taken at the middle cross hair.

Answer is (C)

32. The first backsight and foresight are not balanced. What is the difference between their lengths?

(A) 17.75 ft
(B) 3.55 ft
(C) 35.50 ft
(D) 25.73 ft

Solution: The stadia interval factor of the instrument is 100, and the interval between the upper and lower cross hairs is 2.751 for the BS and 2.396 for the foresight. The distance to the backsight is approximately

$$(2.751)(100) = 275.1 \text{ ft}$$

The distance is approximately

$$(2.396)(100) = 239.6 \text{ ft}$$

The difference to the foresight is approximately

$$\begin{array}{r} 275.1 \text{ ft} \\ -239.6 \text{ ft} \\ \hline 35.5 \text{ ft} \end{array}$$

Answer is (C)

33. Which of the readings shown in the field notes should have been repeated before the work proceeded?

(A) Since the backsight at the first turning point has a lowest wire reading of 0.850, it is too close to the bottom of the rod.

(B) In three of the sets of readings, the interval between the middle and the upper wire differs by more than 0.02 from the interval between the middle and lower wire. They should all have been repeated.

(C) The second backsight and foresight on the page should have been repeated since they are so far out of balance.

(D) Both A and C are true.

Solution: The usual limit placed on the difference between the three-wire readings is two of the smallest units being recorded. The only set of readings that satisfies this limit is the backsight taken at TP1.

Answer is (B)

34. Spot elevations are shown on a map of an existing street. What type of work on such a map would involve interpolation?

(A) spacing contours between the spot elevations

(B) calculating the grade of the street's centerline

(C) preparing the plan of a survey to further densify the available elevation information

(D) preparing a profile drawing of the street

Solution: Interpolation is a method of finding intermediate values between fixed values. The plotting of contours on a map with spot elevations involves interpolation since the spots seldom fall precisely on the contour elevations.

Answer is (A)

The following three problems refer to the information given.

Trigonometric leveling was used to find the difference in elevation between two monuments known as Thornton and 300. The slope distance measured between them was 6782.955 ft. The following data were also measured.

Station:	Zenith forward:	Zenith back:	Height of the EDM:	Height of the prism:	Height of the instrument:
Thornton to 300	91°06′16″		4.70	4.50	4.00
300 to Thornton		88°55′15″	5.60	3.80	5.00

The heights are measured in feet and the elevation of Thornton is known to be 5440.6 ft.

35. From the given information, what is the elevation of the monument at 300 to the nearest foot?

(A) 5311 ft
(B) 5439 ft
(C) 5315 ft
(D) 5353 ft

Solution: A small angular correction must be applied to the measured zenith angles at each end of the line to compensate for the difference in the height of the instrument and the EDM.

$$\frac{\sin\,(\text{measured zenith})}{\text{slope distance}} = \frac{\sin\,(\text{angular correction})}{\text{height of EDM} - \text{height of instrument}}$$

Zenith forward:

$$\frac{\sin 91°06'16''}{6782.955\text{ ft}} = \frac{\sin\alpha}{4.70\text{ ft} - 4.00\text{ ft}}$$

$$\alpha = 00°00'21''.3$$

$$\text{measured zenith forward} + \text{angular correction} = \text{corrected angle}$$

$$91°06'16'' + 00°00'21''.3 = 91°06'37''.3$$

Zenith back:

$$\frac{\sin 88°55'15''}{6782.955 \text{ ft}} = \frac{\sin \alpha}{5.00 \text{ ft} - 5.60 \text{ ft}}$$
$$\alpha = 00°00'18.''2$$

$$\text{measured zenith forward} + \text{angular correction} = \text{corrected angle}$$
$$88°55'15'' + 00°00'18.''2 = 88°55'33.''2$$

Next, find the difference in elevation forward (from Thornton to 300) and back (from 300 to Thornton) using the following expression.

$$(\cos \text{corrected zenith})(\text{slope distance}) + \text{height EDM} - \text{height prism}$$

The difference in elevation forward is

$$\begin{aligned}\Delta \text{ elev} &= (\cos 91°06'37.''3)(6782.955 \text{ ft}) + 4.70 \text{ ft} - 4.50 \text{ ft}\\ &= -131.44 \text{ ft} + 4.70 \text{ ft} - 4.50 \text{ ft}\\ &= -131.24 \text{ ft}\end{aligned}$$

The difference in elevation back is

$$\begin{aligned}\Delta \text{ elev} &= (\cos 88°55'33.''2)(6782.955 \text{ ft}) + 5.60 \text{ ft} - 3.80 \text{ ft}\\ &= 127.15 \text{ ft} + 5.60 \text{ ft} - 3.80 \text{ ft}\\ &= +128.95 \text{ ft}\end{aligned}$$

The average of these two values is used to calculate the elevation at 300.

$$\begin{array}{r} 128.95 \text{ ft} \\ \underline{+131.24 \text{ ft}} \\ 260.19 \text{ ft} \end{array}$$

The mean difference in elevation is

$$\frac{260.19 \text{ ft}}{2} = 130.10 \text{ ft}$$

$$\begin{aligned}\text{elev of Thornton} &= 5440.6 \text{ ft}\\ \Delta \text{ elev} &= +(-130.1 \text{ ft})\\ \text{elev of 300} &= 5310.5 \text{ ft}\end{aligned}$$

Answer is (A)

36. Suppose that only the forward observation was taken from Thornton to 300. What compensation would be necessary in the calculation of the elevation of 300?

(A) The cosine of the zenith angle measured at Thornton multiplied by the slope distance will yield the difference in the elevation between Thornton and 300.

(B) The zenith angle measured at Thornton must be corrected for parallax.

(C) The zenith angle at Thornton must be measured to a target at the same HI.

(D) The zenith angle measured at Thornton must be corrected for the effects of curvature and refraction.

Solution: Differential leveling with a spirit level may neglect the effects of curvature and refraction since the sights involved are seldom long enough or high enough to require such corrections. However, trigonometric leveling must take note of these corrections. When reciprocal observations are available, averaging will correct for both effects, but an approximation must be included in the calculation when reciprocal observations are not available.

Answer is (D)

37. Suppose that only the forward observation was taken from Thornton to 300. When the appropriate corrections are applied to the forward zenith angle, what elevation is determined for point 300, to the nearest foot?

(A) 5308 ft

(B) 5309 ft

(C) 5310 ft

(D) 5311 ft

Solution: A small angular correction must be applied to the measured zenith angles at each end of the line to compensate for the difference in the height of the instrument and the EDM.

$$\frac{\sin\,(\text{measured zenith})}{\text{slope distance}} = \frac{\sin\,(\text{angular correction})}{\text{height of EDM} - \text{height of instrument}}$$

Zenith forward:

$$\frac{\sin 91°06'16''}{6782.955 \text{ ft}} = \frac{\sin \alpha}{4.70 \text{ ft} - 4.00 \text{ ft}}$$
$$\alpha = 00°00'21''.3$$

measured zenith forward + angular correction = corrected angle

$$91°06'16'' + 00°00'21''.3 = 91°06'37''.3$$

(cos corrected zenith)(slope distance) + height EDM − height prism

The apparent difference in elevation forward is

$$\begin{aligned}\Delta \text{ elev} &= (\cos 91°06'37''.3)(6782.955 \text{ ft}) + 4.70 \text{ ft} - 4.50 \text{ ft}\\ &= -131.44 \text{ ft} + 4.70 \text{ ft} - 4.50 \text{ ft}\\ &= -131.24 \text{ ft}\end{aligned}$$

The approximate elevation of point 300 is

$$\begin{aligned}\text{elev of Thornton} &= 5440.60 \text{ ft}\\ \Delta \text{ elev} &= +(-131.24 \text{ ft})\\ \text{elev of 300} &= 5309.36 \text{ ft}\end{aligned}$$

However, this value is only approximate. The effect of curvature tends to make point 300 appear lower than it is, while the effect of refraction tends to make it appear higher. It is important to note that the effect of refraction is about one-seventh the effect of the curvature. The total effect of curvature, c, and refraction, r, is given by the formula

$$c \text{ and } r = 0.0206M^2$$

M is the distance between the point in thousands of feet, and c and r is expressed in feet. Therefore,

$$M = \frac{6782.955 \text{ ft}}{1000} = 6.782955 \text{ thousands of feet}$$
$$\begin{aligned}c \text{ and } r &= 0.0206M^2\\ &= (0.0206)(6.782955 \text{ ft})^2\\ &= 0.95 \text{ ft}\end{aligned}$$

The correction is added to the elevation since the largest component is attributable to curvature and not to refraction.

$$\begin{array}{r} 5309.36 \text{ ft} \\ \underline{+0.95 \text{ ft}} \\ 5310.31 \text{ ft} \end{array}$$

Rounded to the nearest foot, the elevation of 300 is 5310 ft.

Answer is (C)

38. Atmospheric pressure is sometimes used to determine the difference in elevation between points. Assume that the air pressure was simultaneously measured by barometers at two monuments whose elevations differed by 1000 ft. If the atmosphere was stable at the time of the readings, approximately what difference would be expected in the air pressure at the two points, and which would have the larger reading?

(A) The difference between the readings would be approximately 0.1 in of Hg and the higher point would have the larger reading.

(B) The difference between the readings would be approximately 1.0 in of Hg and the higher point would have the smaller reading.

(C) The difference between the readings would be approximately 0.01 in of Hg and the higher point would have the larger reading.

(D) The difference between the readings would be approximately 5.0 in of Hg and the higher point would have the smaller reading.

Solution: As the elevation increases, the barometric pressure decreases. As a rule of thumb, a difference in altitude of 1000 ft will cause a difference in atmospheric pressure of 1 in of mercury (Hg).

Answer is (B)

39. The invert of a concrete sewer line, constructed of pipe with a 36-in i.d. and a 40-in o.d., was measured at sta 25+15.30 and found to be 1892.49 ft. If the grade of the line is $-2\frac{1}{2}\%$, what should the elevation of the top of the pipe be at sta 28+82.75?

(A) 1886.47 ft
(B) 1883.30 ft
(C) 1879.97 ft
(D) 1881.63 ft

Solution: First, find the distance between the stations.

$$\begin{array}{r} 2882.75 \text{ ft} \\ \underline{-2515.30 \text{ ft}} \\ 367.45 \text{ ft} \end{array}$$

Next, find the fall of the pipe over that distance at a grade of $-2\frac{1}{2}\%$.

$$(367.45)(-0.025) = -9.19 \text{ ft}$$

The pipe is 9.19 ft lower at sta 28+82.75 than it was at sta 25+15.30. Therefore, the flowline of the pipe (the invert) is that much lower as well.

$$\begin{array}{rl} \text{elevation of the invert at sta 25+15.30} = & 1892.49 \text{ ft} \\ \text{fall across 367.45 ft at } -2\frac{1}{2}\% = & \underline{+(-9.19 \text{ ft})} \\ \text{elevation of the invert at sta 28+82.75} = & 1883.30 \text{ ft} \end{array}$$

Finally, to find the elevation of the top of the pipe at sta 28+82.75, add the inside diameter and the thickness of the pipe to the elevation of the invert.

$$\begin{array}{rl} 1883.30 \text{ ft} & \text{invert} \\ 3.00 \text{ ft} & \text{inside diameter} \\ \underline{0.17 \text{ ft}} & \text{thickness} \\ 1886.47 \text{ ft} & \end{array}$$

Answer is (A)

40. The invert of an 8-in main sewer line at manhole 10 is found to be 389.00 ft. The grade of the line between manhole 10 and manhole 11 is +0.40%. A new 6-in house service is to be connected to the line between manholes 10 and 11. At the house, the elevation of the flow line of the service is 393.00 ft, and 115 ft of pipe will be used to run between the house and the sewer. If the grade of the service is −2.10%, what is the distance along the sewer from manhole 10 to the service connection? The flowline of the house service must connect at the top (or crown) of the 8-in main sewer line.

(A) 230.0 ft
(B) 152.3 ft
(C) 306.9 ft
(D) 193.7 ft

Solution: The grade of the service is −2.10% for 115 ft. The fall can be computed as

$$(115.0 \text{ ft})(-0.021) = -2.42 \text{ ft}$$

The elevation of the flowline at the house is 393.00 ft, so the elevation of the flowline of the service at its connection with the sewer is

$$\begin{array}{r} 393.00 \text{ ft} \\ \underline{-2.42 \text{ ft}} \\ 390.58 \text{ ft} \end{array}$$

Since the connection of the service must be at the top of the 8-in main sewer, the vertical distance calculated must increase by 8 in (0.66 ft) to accommodate the width of the main sewer line.

$$\begin{array}{r} 390.58 \text{ ft} \\ \underline{-0.66 \text{ ft}} \\ 389.92 \text{ ft} \end{array}$$

Next, find the difference in elevation between the invert at manhole 10 and the invert at the point of connection.

$$\begin{array}{rr} \text{elevation of the flowline of the main at the connection} = & 389.92 \text{ ft} \\ \text{elevation of the invert of manhole 10} = & \underline{-389.00 \text{ ft}} \\ \text{rise from the invert to the connection} = & 0.92 \text{ ft} \end{array}$$

The distance between the two points can be found by dividing the difference in the elevation by the grade along the main sewer.

$$\frac{0.92 \text{ ft}}{0.004} = 230.00 \text{ ft}$$

Answer is (A)

41. A 2500-ft level loop is intended to satisfy the Federal Geodetic Control Committee (FGCC) specifications for third order. Which of the following elements would disqualify the work from meeting these specifications?

(A) a wooden or metal level rod
(B) only second order benchmarks available for control
(C) reading only the center wire
(D) sight lengths of 325 ft

Solution: The acceptable misclosure for a third-order loop is

$$E = 12\sqrt{K}$$

K is the distance in kilometers.

For a loop of 2500 ft, or 0.762 km,

$$\begin{aligned} \text{allowable misclosure in mm} &= 12\sqrt{0.762} \\ &= 10.5 \text{ mm} \\ (10.5 \text{ mm})\left(0.00328 \frac{\text{ft}}{\text{mm}}\right) &= 0.034 \text{ ft} \end{aligned}$$

The element that would disqualify the level run from the FGCC definition of third order is the sight length of 325 ft. The maximum allowable sight limit is 90 m, or 295 ft.

Answer is (D)

42. A differential level line was run ascending a grade. The sights were not balanced; the backsights were consistently 325 ft, and the foresights were 210 ft. The elevation difference between BM 1 at the bottom of the grade and BM 2 at the top of the grade was calculated to be 96.32 ft. The run required 24 setups.

Later, the level was discovered to be out of adjustment. During the level work, the line of sight of the instrument was inclined downward 0.02 ft per 300 ft. In light of this information, what is the adjusted difference in elevation between BM 1 and BM 2?

(A) 96.50 ft
(B) 96.14 ft
(C) 96.41 ft
(D) 96.23 ft

Solution: If the sights had been balanced on the level run, the inclination of the line of sight would have not altered the measurement of the difference in elevation between the BMs. However, the sights were out of balance by 115 ft at each setup.

$$\begin{array}{r} 325 \text{ ft} \\ \underline{-210 \text{ ft}} \\ 115 \text{ ft} \end{array}$$

At each of the 24 setups, the inclination of the line of sight acted to make the HI appear lower than it actually was. First, to find the total distance over which the error applied, multiply the number of setups by the feet out of balance.

$$(115 \text{ ft})(24 \text{ setups}) = 2760 \text{ ft}$$

The magnitude of the error is 0.02 ft per 300 ft. The total error is

$$\left(\frac{0.02 \text{ ft}}{300 \text{ ft}}\right)(2760 \text{ ft}) = 0.184 \text{ ft}$$

The previously calculated difference in elevation between the two BMs is in error by 0.184 ft. Since the inclination was downward and the foresights were shorter

than the backsights, the calculated difference in elevation was too small. The difference should be increased by 0.184 ft.

$$\begin{array}{r} 96.32 \text{ ft} \\ +0.184 \text{ ft} \\ \hline 96.50 \text{ ft} \end{array}$$

Answer is (A)

43. A level is set up between a BM and a turning point (TP) with the foresight and backsight balanced. The elevation of the BM at the backsight is 4107.22 ft, and the reading on the rod is 1.47 ft. The reading on the rod at the foresight is 4.69 ft. If the rod at the foresight was inclined toward the instrument by 15° at the moment it was read, what is the elevation of the TP?

(A) 4104.00 ft
(B) 4104.16 ft
(C) 4103.84 ft
(D) 4104.32 ft

Solution: Since the rod at the TP was inclined toward the instrument when the reading was taken, the reading was too high and the elevation determined from it was too low. The correct rod reading can be found by multiplying 4.69 ft by the cosine of 15°.

$$(4.69 \text{ ft})(\cos 15°) = (4.69 \text{ ft})(0.96592) = 4.53 \text{ ft}$$

The actual elevation of the TP can now be found.

$$\begin{array}{rr} \text{elevation of the BM} = & 4107.22 \text{ ft} \\ \text{backsight} = & +1.47 \text{ ft} \\ \hline \text{HI} = & 4108.69 \text{ ft} \\ \text{foresight} = & -4.53 \text{ ft} \\ \hline & 4104.16 \text{ ft} \end{array}$$

Answer is (B)

TRANSITS AND THEODOLITES

44. When an angle has been determined by repetition on a repeating theodolite, which of the following statements is true?

(A) The plate of the instrument used to measure the angle was set to zero before each backsight.

(B) Each successive measurement of the angle was added to the sum of those already measured.

(C) The angle was measured each time with the telescope in the inverted position.

(D) The angle was turned an odd number of times.

Solution: A repeating instrument allows the operator to accumulate the measurements of an angle on the plate, adding each successive angle to the sum of those already turned.

Answer is (B)

45. What is a difference between a repeating theodolite and a directional theodolite?

(A) Directional theodolites have automatic vertical circle compensators and repeating theodolites do not.

(B) Repeating theodolites are equipped with interior optics for reading the circles and directional theodolites are not.

(C) Directional theodolites have three leveling screws or cams and repeating theodolites have four.

(D) Repeating theodolites are equipped with upper and lower motions and directional theodolites are not.

Solution: Using the lower clamp and tangent screw for backsighting and the upper motion for foresighting allows the operator to accumulate several angular readings on the plate of a repeating theodolite. The technique cannot be used with a directional theodolite, which has no lower motion.

Answer is (D)

46. What is the name of the component of an instrument that includes the stadia hairs, and what is the most commonly used stadia interval factor?

(A) The component is the reticle, and the stadia interval most often used is 100.

(B) The component is the micrometer, and the stadia interval most often used is 300.

(C) The component is the dioptric scale, and the stadia interval most often used is 200.

(D) The component is the telescope objective, and the stadia interval most often used is 100.

Solution: In the past, the reticle, sometimes called the *reticule*, was often constructed of threads from the web of a brown spider. Today it is usually composed of lines etched in glass. The stadia interval factor most frequently used in the reticle is 100.

Answer is (A)

47. Verniers are often used in reading both the horizontal and vertical circles of transit. A particular vernier scale is attached to a circle that is graduated to $20'$. The vernier has 40 increments that, taken together, equal 39 on the circle. What is this type of vernier, and what is its least count?

(A) It is a folding vernier with a least count of $01'$.

(B) It is a retrograde vernier with a least count of $30''$.

(C) It is a direct vernier with a least count of $01'$.

(D) It is a direct vernier with a least count of $30''$.

Solution: The vernier described is of the direct type, as are nearly all transit verniers. The increments on the direct vernier are slightly smaller than those on the circle; in this case, 40 spaces on the vernier correspond to 39 spaces on the circle. On the other hand, a retrograde vernier is characterized by increments on the vernier that are larger than those on the circle.

The least count of the vernier may be found by the expression

$$\text{least count} = \frac{s}{n}$$

s is the length of each graduation of the circle, and n is the number of vernier spaces. In this case, the least count is found by

$$\frac{20 \text{ ft}}{40} = 0.5 \text{ ft} = 30 \text{ in}$$

Answer is (D)

48. Which of the following statements does not describe a portion of the procedure known as *double-centering*?

(A) A backsight is taken once with the telescope of the instrument in the direct position and once with the telescope in the inverted position.

(B) One point is set on the line described with the telescope in the direct position and another with the telescope in the inverted position.

(C) The angle is measured between the two points, subtracted from 180°, and the resulting angle is set off from the backsight to correctly prolong the line.

(D) Midway between the two temporary points, a third point is set on the correct prolongation of a straight line.

Solution: There is no need to measure the angle between the two temporary points. The middle position between two points set with the telescope direct and inverted will lie on the prolongation of the desired line.

Answer is (C)

49. Which of the following procedures is known as *closing the horizon*?

(A) turning a small deflection angle to clear an obstacle, moving forward to a point on that line, and doubling the same deflection in the opposite direction

(B) setting the instrument between two points and shifting it laterally until it stands on the line described by the two points

(C) turning a horizontal angle with the telescope of the instrument in both the direct and the inverted positions

(D) measuring horizontal angles from the backsight to the foresight and from the foresight to the backsight and checking to see that their sum is approximately 360°

Solution: Closing the horizon is a term that means the procedure of measuring angles around a point such that the last angle terminates on the sight where the first angle began. The sum of such a series of angles should be 360°.

Answer (A) is a partial description of one method of traversing around an obstacle. Answer (B) describes a procedure known as *balancing in*. Answer (D) describes *closing the horizon*. Answer (E) is called *incrementing the plate*.

Answer is (D)

50. Which of the following methods would provide the most accurate check of the adjustment of an optical plummet on a modern tribrach?

(A) Set the tribrach on a tripod in a room and place a piece of paper beneath it. Draw a cross on the paper and, using a plumb bob, move the instrument directly over the cross. Remove the plumb bob and, with the tribrach level, check the cross hairs of the optical plummet against the cross on the piece of paper.

(B) Set the tribrach on a tripod in a room and place a piece of paper beneath it. With the tribrach level, draw a cross on the paper and using the optical plummet, move the instrument until the cross is exactly coincident with the cross hairs. Hang a plumb bob and check it against the cross on the piece of paper.

(C) Set the tribrach on a tripod in a room and place a piece of paper beneath it. Draw the outline of the base plate of the tribrach directly on the tripod head. With the tribrach level, mark the position of the plummet's cross hair on the paper. Rotate the tribrach, place the base plate carefully within the penciled outline, and repeat the procedure. If the marks on the paper from three such rotations coincide, the optical plummet is in adjustment.

(D) Set a tribrach known to be in good adjustment on a tripod in a room and place a piece of paper beneath it. Draw the outline of the base plate of the tribrach directly on the tripod head. With the tribrach level, mark the position of the plummet's cross hair on the paper. Remove the tribrach and replace it with another that must be checked. Carefully place the second tribrach within the outline of the first and check it against the cross on the piece of paper.

Solution: Checking an optical plummet against a plumb bob is likely to be accurate within approximately ± 1 mm. The procedure described in answer (C) will provide the best check, within an error circle of approximately $\pm\frac{1}{2}$ mm.

Answer is (C)

TAPING

51. Any unsupported portion of a steel tape sags in an arc known by which of the following names?

(A) a cycloid
(B) a parabola
(C) a helical arc
(D) a catenary

Solution: A steel tape not supported throughout its length will assume the form of a catenary.

Answer is (D)

52. Which of the following specifications would typically achieve a standard length from a 100-ft steel tape?

(A) a tape supported throughout its length under 25 lb of tension at 72°F
(B) a tape supported only at its end under 25 lb of tension at 72°F
(C) a tape supported only at its end under 15 lb of tension at 45°F
(D) a tape supported throughout its length under 12 lb of tension at 68°F

Solution: Many 100-ft steel tapes are manufactured to provide their standard length when they are horizontal, fully supported, and under 12 lb of tension at 68°F. The standard tension is somewhat more variable than the standard temperature, the latter being almost universally accepted as 68°F, or 20°C.

Answer is (D)

53. A steel tape that is used when the temperature is colder or warmer than that for which its length was standardized is subject to contraction or expansion. The coefficient of thermal expansion of steel is a critical value for quantifying such changes. What is this coefficient?

(A) 6.5×10^{-6} per °F
(B) 1.16×10^{-5} per °C
(C) 0.0000065 per °F
(D) A, B, and C

Solution: Steel expands and contracts at a rate of approximately 0.0000065 per unit of length for each degree Fahrenheit and 0.0000116 per unit of length for each degree Celsius.

Answer is (D)

54. A steel tape that is 100.00 ft long when supported only at its ends under a tension of 20 lb is used to measure a line. The temperature is 68°F, the pull on the tape is 40 lb, and the line is measured as 469.40 ft. The tape used is 0.33-in wide × 0.02-in thick. If one assumes the modulus of elasticity of steel to be 29,000,000 psi, what is the actual length of the measured line?

(A) 469.45 ft
(B) 469.42 ft
(C) 469.36 ft
(D) 469.39 ft

Solution: The formula to calculate the correction for a tape used without the correct tension is

$$C_p = \frac{(P - P_s)L}{AE}$$

C_p is the elongation of the tape, P is the pull on the tape, P_s is the standarc pull, A is the cross-sectional area of the tape, E is the modulus of elasticity o steel, and L is the length measured.

$$\begin{aligned} C_p &= \frac{(40 \text{ lb} - 20 \text{ lb})(469.40 \text{ ft})}{(0.0066 \text{ in}^2)(29{,}000{,}000 \text{ psi})} \\ &= \frac{(20 \text{ lb})(469.40 \text{ ft})}{191{,}400 \text{ lb}} \\ &= \frac{9388 \text{ ft}}{191{,}400 \text{ lb}} \\ &= 0.05 \text{ ft} \end{aligned}$$

The correction for the measured line should be added to the recorded measure ment, since the tape was stretched by the excess pull and reads short.

$$\begin{array}{r} 469.40 \text{ ft} \\ +0.05 \text{ ft} \\ \hline 469.45 \text{ ft} \end{array}$$

A rule of thumb that may be used to estimate the effect of greater than standarc pull is: the length of a heavy, 100-ft steel tape is increased by approximatel 0.001 ft for each 3-lb increase in the pull.

Answer is (A)

55. Invar tapes are noted for their diminished thermal expansion and contrac tion. What is the percentage of decreased sensitivity to temperature of inva compared to steel?

(A) 3%
(B) 12%
(C) 20%
(D) 66%

Solution: The effect of temperature on the length of an invar tape is negligible The coefficient of thermal expansion of the nickel and steel alloy is 0.0000002 pe degree Fahrenheit, or approximately one-thirtieth that of steel.

Answer is (A)

56. A line is measured with a steel tape using standard tension and supported throughout its length on an incline with a vertical angle of 27°. The temperature of the tape is 83°F. The slope distance is measured as 132.67 ft. What is the true length of the line to the nearest hundredth of a foot?

(A) 120.54 ft
(B) 115.63 ft
(C) 118.22 ft
(D) 125.09 ft

Solution: The measurement should be corrected for temperature and slope. It is best to consider the temperature correction first. The tape is probably standard at 68°F, so the following formula applies.

$$C_t = k(T_1 - T)L$$

C_t is the correction for the change in temperature, k is the coefficient of thermal expansion for steel, T_1 is the temperature of the tape, T is the standard temperature for the tape, and L is the recorded length of the measurement.

$$\begin{aligned} C_t &= \left(\frac{0.0000065}{°\text{F}}\right)(83°\text{F} - 68°\text{F})(132.67\text{ ft}) \\ &= \left(\frac{0.0000065}{°\text{F}}\right)(15°\text{F})(132.67\text{ ft}) \\ &= (0.0000975)(132.67\text{ ft}) \\ &= 0.01\text{ ft} \end{aligned}$$

$$\begin{array}{r} 132.67\text{ ft} \\ +\,0.01\text{ ft} \\ \hline 132.68\text{ ft} \end{array}$$

Next, the correction for slope can be calculated using the cosine function.

$$\begin{aligned} \text{horizontal distance} &= (\text{slope distance})(\cos\text{vertical angle}) \\ &= (132.68\text{ ft})(\cos 27°) \\ &= 118.22\text{ ft} \end{aligned}$$

Answer is (C)

57. The measurement of a line was recorded as 1315.72 ft. Later, the tape used to make the measurement was compared to a standard at 68°F and found to have a length of 100.02 ft rather than 100.00 ft. Also, the measurement was made when the temperature of the tape was 45°F rather than the standard 68°F. What is the true length of the line?

(A) 1315.79 ft
(B) 1316.18 ft
(C) 1315.98 ft
(D) 1316.09 ft

Solution: The temperature and the length of the tape are not standard. The tape is found to be 100.020 ft at 68°F. Use the following formula to find one length of the tape at 45°F.

$$C_t = k(T_1 - T)L$$

C_t is the correction for the change in temperature, k is the coefficient of thermal expansion for steel, T_1 is the temperature of the tape, T is the standard temperature for the tape, and L is the recorded length of the measurement.

$$\begin{aligned} C_t &= (0.0000065)(45°\text{F} - 68°\text{F})(100.020 \text{ ft}) \\ &= (0.0000065)(-23°\text{F})(100.020 \text{ ft}) \\ &= (-0.00015)(100.020 \text{ ft}) \\ &= -0.015 \text{ ft} \end{aligned}$$

$$\begin{array}{r} 100.020 \text{ ft} \\ +(-0.015 \text{ ft}) \\ \hline 100.005 \text{ ft} \end{array}$$

At the colder temperature, the tape will have contracted to nearly its nomina length. The following formula is useful for correcting a measurement made witl a tape that is not the correct length.

$$\begin{aligned} C_a &= \frac{(\text{actual length} - \text{nominal length})(\text{recorded measurement})}{\text{nominal length}} \\ &= \frac{(100.005 \text{ ft} - 100.000 \text{ ft})(1315.72 \text{ ft})}{100.000 \text{ ft}} \\ &= \frac{(0.005 \text{ ft})(1315.72 \text{ ft})}{100.000 \text{ ft}} \\ &= \frac{6.5786}{100.000 \text{ ft}} \\ &= 0.066 \text{ ft} \end{aligned}$$

The true length of the measured line will be longer than the recorded length by 0.07 ft.

$$\begin{array}{r} 1315.72 \text{ ft} \\ +\,0.07 \text{ ft} \\ \hline 1315.79 \text{ ft} \end{array}$$

Answer is (A)

58. An unsupported 3-lb, 100.00-ft tape at its standard temperature under 10 lb of tension was used to establish stakes intended to be 600.00 ft apart. In the end, the established stakes were not exactly 600.00 ft apart. The distance between the same stakes was measured a second time with the same tape, unsupported, in 25.00-ft increments. Each segment was under 10 lb of tension. What was the observed length of the last segment, expressed to the nearest tenth of a foot?

(A) 22.9 ft
(B) 25.0 ft
(C) 27.1 ft
(D) 24.3 ft

Solution: The measurements should be corrected for the sag of the tape before they are compared. The formula for the sag correction is

$$C_s = \frac{W^2 L}{24P^2}$$

C_s is the correction between the points of support in feet, W is the weight of the tape between supports in pounds, L is the distance between the supports in feet, and P is the applied pull in pounds.

$$\begin{aligned} C_s &= \frac{(3 \text{ lb})^2(100.00 \text{ ft})}{(24)(10 \text{ lb})^2} \\ &= \frac{900.00 \text{ ft}}{2400.00} \\ &= 0.375 \text{ ft} \end{aligned}$$

The distance measured with the unsupported tape is greater than the actual distance by 0.375 ft for every full tape length. The correction for six full tape lengths is

$$(6)(0.375 \text{ ft}) = 2.25 \text{ ft}$$

The actual distance is

$$\begin{array}{r} 600.00 \text{ ft} \\ -2.25 \text{ ft} \\ \hline 597.75 \text{ ft} \end{array}$$

The same procedure can be used to discover the true length of each 25.00-f segment.

$$\begin{aligned} C_s &= \frac{(0.75 \text{ lb})^2(25.00 \text{ ft})}{(24)(10 \text{ lb})^2} \\ &= \frac{14.0625 \text{ ft}}{2400.00} \\ &= 0.006 \text{ ft} \end{aligned}$$

The distance measured with the unsupported tape is greater than the actua distance by 0.006 ft for every segment length. The correction for 24 segmen lengths is

$$(24)(0.006 \text{ ft}) = 0.14 \text{ ft}$$

The actual distance is

$$\begin{array}{r} 600.00 \text{ ft} \\ -0.14 \text{ ft} \\ \hline 599.86 \text{ ft} \end{array}$$

The difference between the two measurements can now be found.

$$\begin{array}{r} 599.86 \text{ ft} \\ -597.75 \text{ ft} \\ \hline 2.11 \text{ ft} \end{array}$$

The last segment length will then be less than 25.00 ft.

$$\begin{array}{r} 25.00 \text{ ft} \\ -2.11 \text{ ft} \\ \hline 22.89 \text{ ft} \end{array}$$

Expressed to the nearest tenth of a foot, the answer is 22.9 ft.

Answer is (A)

STADIA

The following three problems refer to the observation described.

An instrument with an internal focus and a stadia interval factor of 100 occupies station A. The HI is 5.27 ft and the elevation of station A is 2487.91 ft. The stadia interval observed on a rod at station B is 7.51 ft. The rod reading at the center hair is 6.85 at a zenith angle of $87°37'$.

59. What is the horizontal distance from station A to station B?

(A) 751.00 ft
(B) 752.00 ft
(C) 750.70 ft
(D) 749.70 ft

Solution: The fact that the instrument has an internal focus is important to the solution of this problem. The factor most often symbolized by C in stadia calculations is equal to zero in such instruments. Observations made with external focusing instruments most often consider the C factor to be equal to 1. However, in this case the formula for reducing the stadia observation for horizontal distance can be expressed as

$$H = Ks\sin^2 Z$$

H is the horizontal distance, K is the stadia interval factor, s is the stadia interval, and Z is the observed zenith angle.

$$\begin{aligned} H &= (100)(7.51)(\sin^2 87°37') \\ &= (751)(0.99827) \\ &= 749.70 \text{ ft} \end{aligned}$$

Answer is (D)

60. What is the vertical distance between the height of the instrument at station A and the reading at the middle cross hair on the rod at station B?

(A) +62.40 ft
(B) +32.20 ft
(C) +16.15 ft
(D) +31.20 ft

Solution: The formula for solving the vertical distance is

$$V = \tfrac{1}{2} K s \sin 2Z$$

V is the vertical distance, K is the stadia interval factor, s is the stadia interval, and Z is the observed zenith angle.

$$\begin{aligned} V &= \left(\tfrac{1}{2}\right)(100)(7.51 \text{ ft})[\sin(2)(87^\circ 37')] \\ &= \left(\tfrac{1}{2}\right)(751 \text{ ft})(0.08309) \\ &= +31.20 \text{ ft} \end{aligned}$$

Answer is (D)

61. What is the elevation of station B to the nearest tenth of a foot?

(A) 2517.5 ft
(B) 2519.1 ft
(C) 2513.8 ft
(D) 2545.0 ft

Solution: The elevation of station A is 2487.91 ft and the HI is 5.27 ft; therefore the elevation of the instrument itself is

$$\begin{array}{r} 2487.91 \text{ ft} \\ +5.27 \text{ ft} \\ \hline 2493.18 \text{ ft} \end{array}$$

The vertical distance to the rod at station B, as determined in Problem 60, is +31.20 ft. Therefore, the elevation of the rod reading at station B is

$$\begin{array}{r} 2493.18 \text{ ft} \\ +31.20 \text{ ft} \\ \hline 2524.38 \text{ ft} \end{array}$$

The rod reading at station B is 6.85 ft.

$$\begin{array}{r} 2524.38 \text{ ft} \\ -6.85 \text{ ft} \\ \hline 2517.53 \text{ ft} \end{array}$$

Answer is (A)

EDM

62. Concerning a modern EDM that uses coherent laser light, which of the following atmospheric factors will be the least critical to the accuracy of its measurement of distance?

(A) the air temperature
(B) the barometric pressure
(C) the relative humidity
(D) each is equally significant

Solution: Relative humidity has a relatively small effect on the speed of light waves. However, in using a microwave EDM, an error of 3°F in the difference between the temperature of the wet and dry bulbs of a psychrometer can account for an error of nearly 10 ppm.

Answer is (C)

63. While the temperature correction applied to EDM measurements is not of great consequence for short distances, it is more important for longer distances. Assume an error of +18°F has been made in the determination of the temperature at the time of an EDM measurement. What magnitude of error in parts per million might result?

(A) +5 ppm
(B) −18 ppm
(C) +10 ppm
(D) −20 ppm

Solution: An error of +18°F in the determination of the air temperature would cause a corresponding error in the calculation of the apparent velocity of light of approximately 9000 ft per sec. The resulting error in the measured distance would be approximately +10 ppm.

Answer is (C)

64. Assume that an error of +25 mm of Hg has been made in the determination of the air pressure at the time of an EDM measurement. What magnitude of error in parts per million might result?

(A) −15 ppm
(B) +10 ppm
(C) +5 ppm
(D) −10 ppm

Solution: While an increase in air temperature allows the apparent velocity of light to increase, an increase in air pressure has the opposite effect. An error of +25 mm of Hg (torr) would result in an error in the calculation of the measured distance of approximately −10 ppm.

Answer is (D)

65. What is the apparent velocity of the light from a red laser at 75°F and 30 in of mercury?

(A) 186,230 mi/s
(B) 186 000 km/s
(C) 1 ft per nanosecond
(D) 299 694 km/s

Solution: The wavelength of the light from a red laser is 0.6328 μm in standard air, and its refractive index is 1.0003002.

$$\text{refractive index} = 1 + \left(287.604 + \frac{4.8864}{\lambda_c^2} + \frac{0.068}{\lambda_c^4}\right) \times 10^{-6}$$

λ_c is the wavelength of the light in micrometers.

$$\begin{aligned}\text{refractive index} &= 1 + \left(287.604 + \frac{4.8864}{(0.6328)^2} + \frac{0.068}{(0.6328)^4}\right) \times 10^{-6} \\ &= 1.0003002\end{aligned}$$

However, the air in this case is not standard. The refractive index must be calculated for 75°F and 30 in Hg.

$$\text{nonstandard refractive index} = 1 + \frac{0.359474(n_g - 1)p}{273.2 + t}$$

n_g is the refractive index in standard air, p is the atmospheric pressure in millimeters of Hg, and t is the temperature in degrees Celsius.

First, convert 75°F to degrees Celsius.

$$\begin{aligned}{}^\circ\text{C} &= \left(\frac{5}{9}\right)(^\circ\text{F} - 32^\circ) \\ &= \left(\frac{5}{9}\right)(75^\circ - 32^\circ) \\ &= \left(\frac{5}{9}\right)(43^\circ) \\ &= 23.9^\circ\text{C}\end{aligned}$$

Next, convert 30 in Hg to millimeters of Hg.

$$25.4 \text{ mm} = 1 \text{ in}$$
$$(30 \text{ in})\left(25.4\,\frac{\text{mm}}{\text{in}}\right) = 762 \text{ mm}$$

Now, calculate the refractive index at 75°F and 30 in of Hg.

$$\begin{aligned}
\text{nonstandard refractive index} &= 1 + \frac{0.359474(n_g - 1)p}{273.2 - t} \\
&= 1 + \frac{(0.359474)(1.0003002 - 1)(762 \text{ mm})}{273.2 - 23.9°\text{C}} \\
&= 1 + \frac{(0.359474)(0.0003002)(762 \text{ mm})}{249.3} \\
&= \frac{1 + 0.082230540}{249.3} \\
&= 1 + 0.000329846 \\
&= 1.000329846
\end{aligned}$$

The velocity of laser light through the atmosphere can be expressed as

$$\begin{aligned}
V &= \frac{\text{speed of light in a vacuum}}{\text{refraction index}} \\
&= \frac{299\,792.5\,\frac{\text{km}}{\text{s}}}{1.000329846} \\
&= 299\,694 \text{ km/s}
\end{aligned}$$

Answer is (D)

66. What is the maximum error one might expect in a distance measurement o 4932.48 ft made with an EDM whose specified reliability is ±(5 mm + 5 ppm)?

(A) ±0.06 ft
(B) ±0.15 ft
(C) ±0.09 ft
(D) ±0.03 ft

Solution: The formula used to calculate the maximum error for the specified EDM is

$$\pm 3\sqrt{\left(\frac{5\text{ mm}}{304.8}\right)^2 + \left(\frac{5d}{1{,}000{,}000}\right)^2}$$

The data provided by the manufacturer includes a constant value (5 mm) and a value that is relative to the distance measured (5 times the distance).

The division of the 5 mm by 304.8, the number of millimeters in a foot, converts the first part of the expression to decimals of a foot. The distance measured is multiplied by 5 and divided by 10^6 to find the length of 5 ppm. The two elements of the standard error are then squared, and the square root of their sum is multiplied by three to find the maximum error of the particular EDM measurement.

$$\begin{aligned}\pm 3\sqrt{\left(\frac{5\text{ mm}}{304.8}\right)^2 + \left[\frac{(5)(4932.48\text{ ft})}{1{,}000{,}000}\right]^2} &= \pm 3\sqrt{(0.0164)^2 + (0.0246624)^2} \\ &= \pm 3\sqrt{0.000269 + 0.0006082} \\ &= \pm 3\sqrt{0.000877234} \\ &= \pm 0.09\text{ ft}\end{aligned}$$

Answer is (C)

67. A surveyor using the same instruments throughout occupied point 1 and measured 1186.42 ft to point 3 and 355.93 ft to point 2. The surveyor then occupied point 2 and measured 830.61 ft to point 3. Assuming the measurements are properly corrected for slope and atmospheric conditions, what is the reflector constant of the prisms used in the measurements?

(A) 0.06 ft
(B) 0.03 ft
(C) 0.07 ft
(D) 0.12 ft

Solution: The reflector constant is the distance the light beam travels within the reflector itself. The distance is included in the measured distance, so a correction must be made. Most modern EDMs allow such a correction to be preset. However, the determination of the length of the correction is necessary from time to time when new or different reflectors are used on a project.

The sum of the measurements of lines 1-2 and 2-3 includes the reflector constant twice. The measurement of line 1-3 includes it once. Therefore, the difference between the sum of two line segments and the total measured length is the reflector constant.

$$\begin{aligned} \text{line 1-2} &= 355.93 \text{ ft} \\ \text{line 2-3} &= \underline{+830.61 \text{ ft}} \\ & \ 1186.54 \text{ ft} \end{aligned}$$

$$\begin{aligned} & \ 1186.54 \text{ ft} \\ \text{line 1-3} &= \underline{-1186.42 \text{ ft}} \\ & \ 0.12 \text{ ft} \end{aligned}$$

Answer is (D)

68. An EDM with a standard error of ±(7 mm + 7 ppm) was used in a survey that was to have a relative precision of 1 part in 10,000. The work included a measurement of 200.00 ft. Considering only the standard error, what was the relative precision of that particular measurement?

(A) 1 part in 10,000
(B) 1 part in 10,132
(C) 1 part in 8679
(D) 1 part in 13,604

Solution:

$$\begin{aligned} \pm\sqrt{\left(\frac{7 \text{ mm}}{304.8}\right)^2 + \left(\frac{7d}{1{,}000{,}000}\right)^2} &= \pm\sqrt{\left(\frac{7 \text{ mm}}{304.8}\right)^2 + \left(\frac{1400.00 \text{ ft}}{1{,}000{,}000}\right)^2} \\ &= \pm\sqrt{(0.0230)^2 + (0.0014)^2} \\ &= \pm\sqrt{0.000529 + 0.0000020} \\ &= \pm\sqrt{0.000531} \\ &= \pm 0.023 \text{ ft} \end{aligned}$$

$$\frac{200.00}{0.023} = 8679$$

The relative precision is 1 part in 8679. Generally, the greatest precision is achieved over longer distances with EDM equipment.

Answer is (C)

ROUTE STAKING

69. Which phrase describes a route survey?

(A) a survey conducted to gather information about natural features for making a topographic map

(B) a survey conducted to locate the final position of new construction for documentation and evaluation of the work

(C) a survey conducted to establish property corners and lines

(D) a survey conducted to facilitate the planning, design, and construction of a pipeline, roadway, powerline, or any of a number of linear projects

Solution: The term *route survey* is generally used to describe surveying for a project that deals with a path for transportation of people or commodities from place to place. In practice, a route survey frequently includes aspects from most of the other categories of surveys described.

Answer is (D)

70. Which of the following describes the process of prolonging a line by double centering?

(A) The prolongation of a straight line may be accomplished by backsighting first in the direct position, plunging to reverse, and setting a point forward, then backsighting in reverse, plunging to direct, and setting another point forward. Halving the distance between the two forward points yields the correct prolongation of the line.

(B) The prolongation of a straight line may be accomplished by backsighting first in the direct position, turning an angle of 180°, and setting a point forward, then backsighting in reverse, turning an angle of 180°, and setting another point forward. Halving the distance between the two forward points yields the correct prolongation of the line.

(C) The prolongation of a straight line may be accomplished by backsighting first in the direct position, plunging to reverse, and setting a point forward, then backsighting the set forward point in direct and plunging to reverse on the backsight. Halving the angle between the resulting line of sight and the backsight point yields the correction to apply at the forward point for the true prolongation of the line.

(D) The prolongation of a straight line may be accomplished by backsighting first in the direct position, plunging to reverse, and setting a point forward, then backsighting in reverse, turning an angle of 180°, and setting another point forward. Halving the distance between the two forward points yields the correct prolongation of the line.

Solution: Establishing two forward points, one plunged in the direct position and the other plunged in the reverse position, will provide an immediate indication of the maladjustment of the instrument. The true prolongation of the line will lie halfway between the two points.

Answer is (A)

71. Which of the following techniques is not a well-known method of establishing a straight route around an obstacle on the line?

(A) the measured offset method
(B) the equilateral triangle method
(C) the equal angle method
(D) the single directional method

Solution: The right angle offset method and the measured offset method rely on the establishment of a line parallel to the route of the survey. The equilateral triangle method and the equal angle method rely on the establishment of a point or points at known angles from the route.

Answer is (D)

72. Why are periodic astronomic observations taken in surveying routes of great length?

(A) to correct for accumulated error in azimuth
(B) to establish geographic coordinates
(C) to facilitate ties to NGS control stations
(D) to quantify changes in magnetic declination

Solution: Astronomic observations are often used in long route surveys to correct for error accumulated in azimuths, or to quantify that error.

Answer is (A)

73. What role, if any, does geodesy play in route surveying?

(A) Route surveys are plane surveys and the shape of the earth need not be considered.

(B) Route surveys of great length should take the curvature of the earth into account to avoid otherwise unresolvable discrepancies.

(C) Only route surveys that have great length in a north-south orientation need consider the curvature of the earth.

(D) The only route surveys that call for geodetic considerations are those that are conducted for underground mine work.

Solution: Some route surveys extend for hundreds of miles. Depending on the accuracy required, surveys of such great distances should take the shape of the earth into account.

Answer is (B)

74. Centerline stakes set every 100 ft are standard for many types of route surveys; however, more closely spaced stakes are necessary under some conditions. Which of the following situations would likely require more closely spaced centerline stakes?

(A) When the intersection of one roadway with another occurs at a point other than a full station, a stake is often set at the point of intersection to indicate the stationing equation.

(B) When a route includes horizontal or vertical curves, stakes are set at the beginning and end of the curves, which seldom occur at full stations.

(C) When the requirements for a pipeline route call for a specified number of stakes per pipe length, the spacing is likely to be less than 100 ft between stakes.

(D) All of the above are true.

Solution: These are only a few of the circumstances that call for stakes to be spaced to be more closely than every full station. In fact, it is rare that a route survey does not require at least some stakes set at odd stations.

Answer is (D)

75. Which of the following statements concerning the grading of stakes along a route survey is not true?

(A) The grade of a water line is generally more critical than that of a sewer line.

(B) Offset stakes or guard stakes are usually marked with cuts or fills, rather than centerline stakes.

(C) It is generally not necessary to turn through every stake that is to be graded.

(D) Grades for earthwork and pipelines are generally calculated to the nearest tenth of a foot.

Solution: Generally, the grade of a sewer line is more critical since it relies on gravity flow.

Answer is (A)

76. What is a blue top?

(A) A blue top is a stake set at the catch point of the side slope of a template with the natural ground.

(B) A blue top is a guard stake driven so its top is directly over the line stake.

(C) A blue top is a control point monument located well away from the route being surveyed.

(D) A blue top is a stake driven so its top is at the designed grade, or with the cut or fill to that grade written on the stake.

Solution: The term *blue top* is derived from the practice of marking the top of a stake driven to grade with blue keel. The term is also sometimes used for stakes marked for grade.

Answer is (D)

77. What is a shiner?

(A) A shiner is a tack sometimes set in a line stake for more precise location than the stake alone provides.

(B) A shiner is a hook from which a plumb bob may be hung in surveying tunnels and mines.

(C) A shiner is a 1-in × 1-in stake, 12–18-in long.

(D) A shiner is a nail set through a bottle cap or some other type of metal disk in a hard surface such as pavement.

Solution: It is not unusual for a route survey to cross areas where stakes cannot be driven; a shiner is one of several options for establishing the location of a point. A nail driven through an aluminum or other type of metal disk is convenient and permanent enough in most circumstances.

Answer is (D)

78. What is a batter board?

(A) A batter board is a horizontal board, usually 1 in × 6 in, nailed between two 2-in × 4-in posts that have been driven into the ground near a control point to prevent destruction of the point.

(B) A batter board is a lath set to establish the clearing limits along a route.

(C) A batter board is a pile that has been driven at an angle other than vertical; such piles are frequently used to brace others.

(D) A batter board is a horizontal board, usually 1 in × 6 in, nailed between two 2-in × 4-in posts that have been driven into the ground across a trench or near a building corner.

Solution: Batter boards are used most frequently in the construction of pipelines and at building corners to provide grade and location. For a pipeline, a horizontal board, usually 1 in × 6 in, is established across the trench by nailing it between two 2-in × 4-in posts that have been driven into the ground. A nail is driven into the horizontal board at the centerline of the pipe. The top of the horizontal

board is usually established at a whole number of feet above the grade of the pipe's flowline. A wire or string stretched from nail to nail provides the reference for the location and grade of the pipe.

Answer is (D)

79. Which statement most correctly describes the purpose of a slope stake?

(A) A slope stake is set to indicate the point where a roadway's pavement ends and its side slope begins.

(B) A slope stake is set to indicate the beginning of superelevation along a highway curve.

(C) A slope stake is set to indicate the point where a side slope intersects the natural ground.

(D) A slope stake is set where the maximum embankment is allowed per the angle of repose.

Solution: Slope stakes are usually set where the cuts or fills necessary for the construction of a roadway or other route exceed approximately 3 ft. In such situations, the points at which the designed side slopes intersect the natural ground are indicated by slope stakes.

Answer is (C)

80. What information is usually written on a slope stake?

(A) the cut or fill at the centerline

(B) the ratio of the slope, the cut or fill at the centerline, and the distance of the stake from the centerline

(C) the station of the stake, the cut or fill at the centerline, the distance of the stake from the centerline, and the ratio of the slope

(D) the ratio of the slope, the cut or fill at the centerline, the distance of the stake from the centerline, the station of the stake, and the width of the roadbed

Solution: The usual data written on a slope stake includes the station of the stake, the cut or fill at the centerline, the distance of the stake from the centerline, and the ratio of the slope.

Answer is (C)

81. Slope stakes are to be set along a particular roadway. The grade at the centerline at sta 14+00 is designed to be 115.4 ft and the HI of a level arranged to set slope stakes is 120.6 ft. In this situation, what is the value known as the *grade rod*?

(A) 5.2 ft
(B) 2.6 ft
(C) −2.6 ft
(D) −5.2 ft

Solution: The grade rod is the rod reading that would occur if the bottom of the rod was held precisely at the finished grade at the centerline.

$$\text{HI} - \text{elevation of the grade} = \text{grade rod}$$

$$\begin{array}{r} 120.6 \text{ ft} \\ \underline{-115.4 \text{ ft}} \\ 5.2 \text{ ft} \end{array}$$

Answer is (A)

82. The width of a particular roadbed is 66 ft, the side slope is designed to be 2:1, the grade rod is 5.2 ft, and the rod is held at a trial position for a slope stake 45 ft from the centerline. The cross section is in cut. The rod is read through the level and the ground rod is found to be 1.1 ft. Which of the following statements is correct under these circumstances?

(A) Another point should be tried farther away from the centerline.
(B) Another point should be tried closer to the centerline.
(C) The slope stake should be set at the trial point.
(D) The stake should be set at the trial point as an offset stake, with an offset of 3 ft written on it.

Solution: The first step in solving this problem is to find the difference between the grade rod and the ground rod.

$$\begin{aligned} h &= \text{grade rod} - \text{ground rod} \\ &= 5.2 \text{ ft} - 1.1 \text{ ft} \\ &= 4.1 \text{ ft} \end{aligned}$$

This value indicates the cut that would be necessary to bring the trial point to the grade elevation of the roadway.

The next step is to determine whether the distance from the centerline, 45 ft, is the correct distance to accomplish the 4.1-ft cut at a 2:1 slope. The applicable formula is

$$d = \frac{w}{2} + hs$$

d is the distance from the centerline, w is the width of the roadbed, h is the difference between the grade rod and the ground rod, and s is the run of the designed slope.

$$\begin{aligned} d &= \frac{66 \text{ ft}}{2} + (4.1 \text{ ft})(2) \\ &= 33 \text{ ft} + 8.2 \text{ ft} \\ &= 41.2 \text{ ft} \end{aligned}$$

The rod is currently 45 ft from the centerline, so it needs to be moved closer to the centerline for another shot.

Answer is (B)

83. The width of a particular roadbed is 50 ft, the side slope is designed to be 3:1, the grade rod is 2.8 ft, and the rod is held at a trial position for a slope stake 32 ft from the centerline. The cross section is in fill. The rod is read through the level and the ground rod is found to be 10.3 ft. The natural ground is relatively level. Which of the following statements is correct under these circumstances?

(A) Another point should be tried farther away from the centerline.
(B) Another point should be tried closer to the centerline.
(C) The slope stake should be set at the trial point.
(D) The stake should be set at the trial point as an offset stake, with an offset of 10 ft written on it.

Solution: The first step in solving this problem is to find the difference between the grade rod and the ground rod.

$$\begin{aligned} h &= \text{grade rod} - \text{ground rod} \\ &= 2.8 \text{ ft} - 10.3 \text{ ft} \\ &= -7.5 \text{ ft} \end{aligned}$$

This value indicates the fill that would be necessary to bring the trial point to the grade elevation of the roadway. The next step is to determine if the distance from the centerline, 32 ft, is the correct distance to accomplish the 7.5-ft fill at a 3:1 slope. Use the same formula as in the previous problem to find the distance.

$$\begin{aligned} d &= \frac{w}{2} + hs \\ &= \frac{50 \text{ ft}}{2} + (7.5 \text{ ft})(3) \\ &= 25 \text{ ft} + 22.5 \text{ ft} \\ &= 47.5 \text{ ft} \end{aligned}$$

The rod is currently 32 ft from the centerline, so the rod needs to be moved farther from the centerline for another shot.

Answer is (A)

84. What is the usual position of a slope stake and the information written on it?

(A) A slope stake is usually driven so that the cut or fill information is facing the centerline of the route; the stationing is written on the side away from the centerline.

(B) A slope stake is usually driven so that the cut or fill information is facing away from the centerline of the route; the stationing is written on the side facing the centerline.

(C) A slope stake is usually driven so that the cut or fill information is parallel with the centerline of the route; the stationing is written on the opposite side.

(D) A slope stake is usually driven so that the cut or fill information and the stationing are written on the side facing the centerline.

Solution: The cut or fill information is usually written on the broad part of the stake and faces the centerline. The stationing is usually written on the opposite side and faces away from the centerline.

Answer is (A)

85. What is superelevation?

(A) Superelevation is another term used to describe compound vertical curves.

(B) Superelevation is the practice of raising the outer edge of pavement or the outer rail of a railway above the elevation of the inner edge or rail along a curve.

(C) Superelevation is the embankment of earth above the angle of repose.

(D) Superelevation is the gradual increase of the centerline radius of a curve along a roadway or railway.

Solution: The raising of the outer edge of pavement along a curve is called *superelevation*. It helps to control the centrifugal force exerted on a vehicle.

Answer is (B)

86. What type of curve is frequently used in conjunction with superelevation in high-speed highway work?

(A) horizontal circular curve
(B) vertical curve
(C) compound vertical curve
(D) transition spiral curve

Solution: The transition spiral curve is frequently used in conjunction with superelevation. The constant rate of change of its curvature makes it ideal for this purpose.

Answer is (D)

ERRORS AND STATISTICS

87. A particular line was measured with the same tape on two separate occasions. Crew 1 measured the distance three times and found it to be 537.96 ft, 538.02 ft, and 537.94 ft. Later, crew 2 measured the same line and found the distance to be 538.072 ft, 538.145 ft, and 538.223 ft. Which of the two crews had the better precision of measurement, and why?

(A) Crew 1 had better precision in its measurements since the mean and the median of its readings are closer together than are those of crew 2.
(B) Crew 2 had better precision in its measurements since its readings have a smaller range than those of crew 1.
(C) Crew 2 had better precision in its measurements since its readings are expressed to the thousandth of a foot, while those of crew 1 are expressed to the hundredth of a foot.
(D) Crew 1 had better precision in its measurements since its readings have a smaller scatter and range than those of crew 2.

Solution: The mean of a series of measurements of the same quantity is the sum of the measurements divided by the number of repetitions.

Crew 1:

$$\begin{array}{r} 537.96 \text{ ft} \\ 537.94 \text{ ft} \\ \underline{+538.02 \text{ ft}} \\ 1613.92 \text{ ft} \end{array}$$

$$\frac{1613.92 \text{ ft}}{3} = 537.973 \text{ ft (arithmetic mean)}$$

Crew 2:

$$\begin{array}{r} 538.072 \text{ ft} \\ 538.145 \text{ ft} \\ \underline{+538.223 \text{ ft}} \\ 1614.440 \text{ ft} \end{array}$$

$$\frac{1614.440 \text{ ft}}{3} = 538.147 \text{ ft (arithmetic mean)}$$

The median of a series of observations of the same quantity is the middle observation, after the measurements have been arranged in ascending or descending order.

Crew 1:

$$\begin{array}{r} 537.94 \text{ ft} \\ \text{median} = 537.96 \text{ ft} \\ 538.02 \text{ ft} \end{array}$$

Crew 2:

$$\begin{array}{r} 538.072 \text{ ft} \\ \text{median} = 538.145 \text{ ft} \\ 538.223 \text{ ft} \end{array}$$

The comparison of the arithmetic mean of a series of observations with its median is not a test for the precision of the observations themselves. However, the scatter and the range of such a series is revealing. Generally, the larger the scatter and range of repeated observations, the less precise are the measurements. The scatter may be defined as the dispersal around the arithmetic mean.

$$v = \text{reading} - \text{mean}$$

Crew 1	v
537.96 ft	−0.013
537.94 ft	−0.033
538.02 ft	+0.047

537.973 ft = arithmetic mean

Crew 2	v
538.072 ft	−0.075
538.145 ft	−0.002
538.223 ft	+0.076

538.147 ft = arithmetic mean

The scatter of the observations is somewhat larger in the measurements of crew 2, even though the difference between the mean and the median is less.

The range may be defined as the difference between the largest and the smallest values in the series of measurements.

Crew 1:

$$\begin{array}{r} 538.02 \text{ ft} \\ \underline{-537.96 \text{ ft}} \\ 0.06 \text{ ft} \end{array}$$

Crew 2:

$$\begin{array}{r} 538.223 \text{ ft} \\ \underline{-538.072 \text{ ft}} \\ 0.151 \text{ ft} \end{array}$$

The range of the observations is larger in the measurements of crew 2.

The measurements of crew 2 are less precise than the measurements of crew 1 because the range and scatter of the observations of crew 1 are smaller.

It is important to note that the precision and the uniformity of these measurements does not determine their accuracy.

Answer is (D)

88. A particular line was measured with the same tape on two separate occasions. Crew 1 measured the distance three times and found it to be 1972.85 ft, 1972.79 ft, and 1973.01 ft. Later, crew 2 measured the same line and found the distance to be 1973.03 ft, 1972.83 ft, and 1973.16 ft. The line was subsequently measured with EDM equipment and found to be 1973.01 ft. Which of the taped measurements was the most accurate, and why?

(A) Crew 1 provided the most accurate measurements since one of its measurements matched that of the EDM.

(B) Crew 2 provided the most accurate measurements since the arithmetic mean of its three measurements is the same as that of the EDM.

(C) The measurements of crew 1 are the most precise, so its measurements are the most accurate.

(D) The measurements of crew 2 are the most accurate since the scatter and range of its observations are smaller than those of crew 1.

Solution: The precision of a series of measurements of the same quantity is not indicative of the accuracy of those measurements. The EDM measurement provides a more accurate standard than the taped distances. The comparison of the arithmetic mean of each series of taped observations with the EDM measurements shows which crew provided the most accurate distance.

Crew 1:

$$\begin{array}{r} 1972.85 \text{ ft} \\ 1972.79 \text{ ft} \\ \underline{+1973.01 \text{ ft}} \\ 5918.65 \text{ ft} \end{array}$$

$$\frac{5918.65 \text{ ft}}{3} = 1972.88 \text{ ft (arithmetic mean)}$$

Crew 2:

$$\begin{array}{r} 1973.03 \text{ ft} \\ 1972.83 \text{ ft} \\ \underline{+1973.16 \text{ ft}} \\ 5919.02 \text{ ft} \end{array}$$

$$\frac{5919.02 \text{ ft}}{3} = 1973.01 \text{ ft (arithmetic mean)}$$

$$\text{EDM measurement} = 1973.01 \text{ ft}$$

Answer is (B)

89. Several errors and mistakes hampered a particular project. The EDM equipment was used throughout the survey with a reflector constant of 0.12 ft when it should have been 0.10 ft. The line of sight through the telescope of the level was inclined by 0.005 ft per 100 ft. The instrument operator was able to read all of the horizontal and vertical angles directly in degrees, minutes, and thirds of minutes (20 sec). However, the angles were also estimated to the nearest 5 sec by the instrument operator, and these estimates were sometimes too high or too low. Which of these errors and mistakes should be eliminated from the field recorded data, to the degree that is possible, before the final adjustment of the project is attempted?

(A) All of the described errors are systematic. Systematic errors should be minimized before any adjustment procedure is implemented.

(B) The error of the reflector constant is systematic and should be minimized before any adjustment procedure is implemented. However, the other two are random errors and may be properly distributed in adjustment.

(C) The discrepancies in the field-recorded data resulting from the incorrect reflector constant and the inclined level sight should both be minimized before any adjustment procedure is implemented. However, the errors resulting from the estimation of the seconds in the angle measurements are random errors and may be properly distributed in an adjustment.

(D) All of the described errors are random. Systematic errors should be eliminated before any adjustment procedure is implemented, but random errors may be properly distributed in an adjustment.

Solution: Mistakes that are the result of carelessness, inattention, bad habits, or faulty technique should not be confused with errors in surveying measurement. Errors are often divided into two categories.

Systematic errors remain the same under the same set of conditions and vary with those conditions. For example, the error introduced by the inclined sight of the level would grow as the distance of the level rod from the level increased. Systematic errors may be quantified and should be eliminated from survey data before it is adjusted.

Random errors do not follow any physical or mathematical law. The estimation of the seconds in the readings of the angles described in the question are random errors. The properties of random errors are imagined to be statistical in nature and are, therefore, subject to adjustment.

Answer is (C)

90. The manipulation of random errors in surveying measurement rests on the application of assumptions from the theory of probability. Which of the following answers best describes these assumptions?

(A) Small errors occur more often than large ones, large errors occur infrequently, and there is an equal opportunity for the occurrence of positive and negative errors.

(B) There is an equal opportunity for the occurrence of large and small errors, errors cancel each other, and the error of closure of a traverse is the sum of its accumulated random errors.

(C) Large errors occur more often than small ones, and there is an equal opportunity for the occurrence of random and systematic errors.

(D) Errors remain the same under the same set of conditions, large mistakes and small mistakes occur with equal frequency, and the error of closure of a traverse is the sum of its accumulated random errors.

Solution: Random errors, unlike systematic errors and mistakes, cannot be avoided and are generally beyond the realm of detection and removal. Therefore, surveyors rely on some basic assumptions from the laws of probability to predict their occurrence and behavior.

Answer is (A)

The following five problems refer to the astronomic azimuths shown, which were determined from the station GRAVEL to station RADIO BEACON NORTH.

59°18′37″	59°18′25″	59°18′39″	59°18′27″
59°18′47″	59°18′21″	59°18′20″	59°18′49″
59°18′22″	59°18′49″	59°18′17″	59°18′46″
59°18′22″	59°18′27″	59°18′26″	59°18′23″
59°18′24″	59°18′19″	59°18′40″	59°18′22″
59°18′27″	59°18′26″	59°18′10″	59°18′37″
59°18′34″	59°18′21″	59°18′30″	59°18′41″

91. What is the mean, expressed to the nearest tenth of a second, and what are the modes, expressed to the nearest second?

(A) mean = 59°18′30.″0
modes = 59°18′23″ and 59°18′22″

(B) mean = 59°18′27.″4
mode = 59°18′29″

(C) mean = 59°18′30.″1
modes = 59°18′49″ and 59°18′10″

(D) mean = 59°18′29.″6
modes = 59°18′27″ and 59°18′22″

Solution: The mean is the sum of the individual measurements divided by the number of observations. The sum of the seconds in the azimuths given is 828. There are a total of 28 observations.

$$\frac{828 \text{ sec}}{28} = 29.6 \text{ sec}$$

The arithmetic mean to the nearest tenth of a second is 29.″6.

The modes are the values that occur most frequently in a series of observations of the same value.

59°18′49″	59°18′37″	59°18′26″	59°18′22″
59°18′49″	59°18′37″	59°18′26″	59°18′21″
59°18′47″	59°18′34″	59°18′25″	59°18′21″
59°18′46″	59°18′30″	59°18′24″	59°18′20″
59°18′41″	59°18′27″	59°18′23″	59°18′19″
59°18′40″	59°18′27″	59°18′22″	59°18′17″
59°18′39″	59°18′27″	59°18′22″	59°18′10″

In this series of observations, 49 sec occurs twice, 37 sec occurs twice, 27 sec occurs three times, 26 sec occurs twice, 22 sec occurs three times, and 21 sec occurs twice.

Therefore, the modes are $59°18'27''$ and $59°18'22''$.

Answer is (D)

92. What are the largest and smallest residuals of the group, expressed in absolute value to the nearest second?

(A) largest residual $= 20''$
smallest residual $= 19''$

(B) largest residual $= 3''$
smallest residual $= 5''$

(C) largest residual $= 20''$
smallest residual $= 0''$

(D) largest residual $= 10''$
smallest residual $= 5''$

Solution: A residual is the difference between an individual reading in a series of observations and the arithmetic mean of that series. Residuals are frequently symbolized by v. The largest value for the azimuth shown is $59°18'49''$, and the smallest is $59°18'10''$. The arithmetic mean of the series is $59°18'30''$.

$$\begin{aligned} \text{residual} &= \text{observation} - \text{arithmetic mean} \\ +19'' &= 59°18'49'' - 59°18'30'' \\ -20'' &= 59°18'10'' - 59°18'30'' \end{aligned}$$

The residuals of these two observations are very close in terms of absolute value. The $20''$ is the largest. There is one observation in the series that is equal to the arithmetic mean.

$$0'' = 59°18'30'' - 59°18'30''$$

The smallest residual of the series is $0''$.

Answer is (C)

93. What is the standard deviation of a single measurement calculated from the list of azimuths given, expressed to the nearest tenth of a second?

(A) $\pm 10.''5$
(B) $\pm 0.''8$
(C) $\pm 2.''0$
(D) $\pm 5.''9$

Solution: The calculation of the standard deviation of a single measurement begins with the calculation of the arithmetic mean. After the mean is determined, the residuals are found. These residuals are squared and the sum of those squares, symbolized by v^2, is calculated.

The following formula may be used to find the standard deviation of a single measurement.

$$\sigma = \sqrt{\frac{\sum v^2}{n-1}}$$

σ is the standard deviation of a single measurement, $\sum v^2$ is the sum of the squares of the residuals, and n is the number of individual observations.

azimuths	v	v^2	azimuths	v	v^2
59°18′49″	+19.″4	376.36	59°18′26″	−03.″6	12.96
59°18′49″	+19.″4	376.36	59°18′26″	−03.″6	12.96
59°18′47″	+17.″4	302.76	59°18′25″	−04.″6	21.16
59°18′46″	+16.″4	268.96	59°18′24″	−05.″6	31.36
59°18′41″	+11.″4	129.96	59°18′23″	−06.″6	43.56
59°18′40″	+10.″4	108.16	59°18′22″	−07.″6	57.76
59°18′39″	+09.″4	88.36	59°18′22″	−07.″6	57.76
59°18′37″	+07.″4	54.76	59°18′22″	−07.″6	57.76
59°18′37″	+07.″4	54.76	59°18′21″	−08.″6	73.96
59°18′34″	+04.″4	19.36	59°18′21″	−08.″6	73.96
59°18′30″	+00.″4	0.16	59°18′20″	−09.″6	92.16
59°18′27″	−02.″6	6.76	59°18′19″	−10.″6	112.36
59°18′27″	−02.″6	6.76	59°18′17″	−12.″6	158.76
59°18′27″	−02.″6	6.76	59°18′10″	−19.″6	384.16
				$\sum v^2 =$	2290.88

$$\begin{aligned}\sigma &= \sqrt{\frac{\sum v^2}{n-1}} \\ &= \sqrt{\frac{2290.88}{28-1}} \\ &= \sqrt{\frac{2290.88}{27}} \\ &= \sqrt{110.773} = \pm 10''.5\end{aligned}$$

Answer is (A)

94. Which of the following statements best describes the standard deviation of a single measurement?

(A) Theoretically, the average of a set of observations has a 68.3% probability of approaching the true value, within the limit specified by the standard deviation of a single measurement.

(B) Theoretically, each of a set of observations has a 99.7% probability of approaching the mean value of the set, within the limit specified by the standard deviation of a single measurement.

(C) The standard deviation of a single measurement is a test of the fit of the actual frequencies of the distribution of data compared to the theoretical frequencies.

(D) Theoretically, each of a set of observations has a 68.3% probability of approaching the mean value of the set, within the limit specified by the standard deviation of a single measurement.

Solution: The standard deviation of a single measurement is given by the formula

$$\sigma = \sqrt{\frac{\sum v^2}{n-1}}$$

σ is the standard deviation of a single measurement, $\sum v^2$ is the sum of the squares of the residuals, and n is the number of individual observations.

The standard deviation is expressed as a plus or minus range, such as $\pm 10''.6$. When attached to the arithmetic mean of a series of observations, for example $59°18'29''.6 \pm 10''.6$, it means that each set of observations has a 68.3% probability of falling within the specified range of the mean value of the set.

In other words, 68.3% of the azimuths in the given list are likely to fall between an upper limit of $59°18'19''.0$ and a lower limit of $59°18'40''.2$. In fact, 71% of the observations fall between those values, indicating that the list is close to a truly random sampling.

Answer is (D)

95. What is the standard error of the mean calculated from the list of azimuths given, expressed to the nearest tenth of a second?

(A) $\pm 8''.4$
(B) $\pm 0''.8$
(C) $\pm 2''.0$
(D) $\pm 5''.9$

Solution: The standard error of the mean of a series of measurements of a single quantity is given by the formula

$$\sigma_m = \frac{\sigma}{\sqrt{n}}$$

σ_m is the standard error of the mean, σ the standard deviation of a single measurement, and n is the number of individual observations.

$$\begin{aligned}\sigma_m &= \frac{\sigma}{\sqrt{n}} \\ &= \frac{\pm 10''.6}{\sqrt{28}} \\ &= \pm 2''.0\end{aligned}$$

Answer is (C)

96. Which of the following statements best describes the standard error of the mean?

(A) Theoretically, the average of a set of observations has a 68.3% probability of approaching the true value, within the limit specified by the standard error of the mean.

(B) Theoretically, each of a set of observations has a 99.7% probability of approaching the mean value of the set, within the limit specified by the standard error of the mean.

(C) The standard error of the mean is a class interval test of the distribution of data.

(D) Theoretically, each of a set of observations has a 95.5% probability of approaching the true value of the set, within the limit specified by the standard error of the mean.

Solution: One way to understand the standard error of the mean is to realize that as the denominator of the expression $\sigma_m = \sigma/\sqrt{n}$ approaches infinity (∞), the standard error of the mean (σ_m) approaches zero.

The standard error of the mean, unlike the standard error of a single observation, is a statement of the uncertainty of the mean, not of a single observation. The uncertainty of the range is expressed with respect to the true value of the quantity being measured.

For example, the standard error of the mean for the list of azimuths given is $\pm 2.''0$. Therefore, it may be said with 68.3% certainty that the unknowable true value of the azimuth, which has been subject to 28 measurements, lies somewhere within the range of $59°18'29.''6 \pm 2.''0$.

Answer is (A)

97. A manufacturer specified the standard error of the distances measured wit a particular EDM as ±(2 mm + 4 ppm). A distance of 7283.91 ft was measure with the equipment. Presuming that all atmospheric corrections have been made what is the range of a 95.5% certainty that may be attached to this measurement

(A) ±0.10 ft
(B) ±0.03 ft
(C) ±0.17 ft
(D) ±0.06 ft

Solution: The standard error specified by the manufacturer is given by the for mula

$$\begin{aligned}\sigma &= \pm\sqrt{\left(\frac{2}{304.8}\right)^2 + \left(\frac{4d}{1{,}000{,}000}\right)^2} \\ &= \pm\sqrt{\left(\frac{2}{304.8}\right)^2 + \left[\frac{(4)(7283.91\text{ ft})}{1{,}000{,}000}\right]^2} \\ &= \pm\sqrt{\left(\frac{2}{304.8}\right)^2 + \left(\frac{29{,}135.64\text{ ft}}{1{,}000{,}000}\right)^2} \\ &= \pm 0.03\text{ ft (standard error)}\end{aligned}$$

This is the range of certainty within which 68.3% of a set of measurements may b expected to fall. However, the value sought is not the range for 68.3% certainty but for 95.5% certainty. The 95.5% certainty range is twice the standard error.

$$(\pm 0.03\text{ ft})(2) = \pm 0.06\text{ ft}$$

Answer is (D)

98. A particular traverse must meet the FGCC standards for Third Order, Class I. The directions for the survey are being determined by a theodolite with a least count of $1''.0$. The standard deviation of the mean of each of the four sets of angles at each point is not to exceed $1''.2$. What is the standard deviation of the mean for the following four angles, and do they fulfill the specification?

$$32°14'57''$$
$$32°14'58''$$
$$32°15'00''$$
$$32°14'52''$$

(A) The standard deviation of the mean is $3''.4$, and it does not fulfill the specification.

(B) The standard deviation of the mean is $1''.2$, and it does fulfill the specification.

(C) The standard deviation of the mean is $1''.7$, and it does not fulfill the specification.

(D) The standard deviation of the mean is $1''.0$, and it does fulfill the specification.

Solution: First, find the arithmetic mean of the four angles.

$$\begin{array}{r} 57'' \\ 58'' \\ 60'' \\ \underline{+52''} \\ 227'' \end{array}$$

$$\frac{227''}{4} = 56''.75$$

Next, find the residuals; then determine the sum of their squares.

	v	v^2
$57''$	$0''.25$	0.062
$58''$	$1''.25$	1.562
$60''$	$3''.25$	10.562
$52''$	$-4''.75$	22.562
	$\sum =$	34.748

Now find the standard deviation of a single measurement.

$$\begin{aligned}\sigma &= \sqrt{\frac{\sum v^2}{n-1}} \\ &= \sqrt{\frac{34.748}{4-1}} \\ &= \sqrt{\frac{34.748}{3}} \\ &= \sqrt{11.583} = \pm 3.''4\end{aligned}$$

Finally, calculate the standard deviation of the mean.

$$\begin{aligned}\sigma_m &= \frac{\sigma}{\sqrt{n}} \\ &= \frac{\pm 3.''4}{\sqrt{4}} \\ &= \pm 1.''7\end{aligned}$$

Answer is (C)