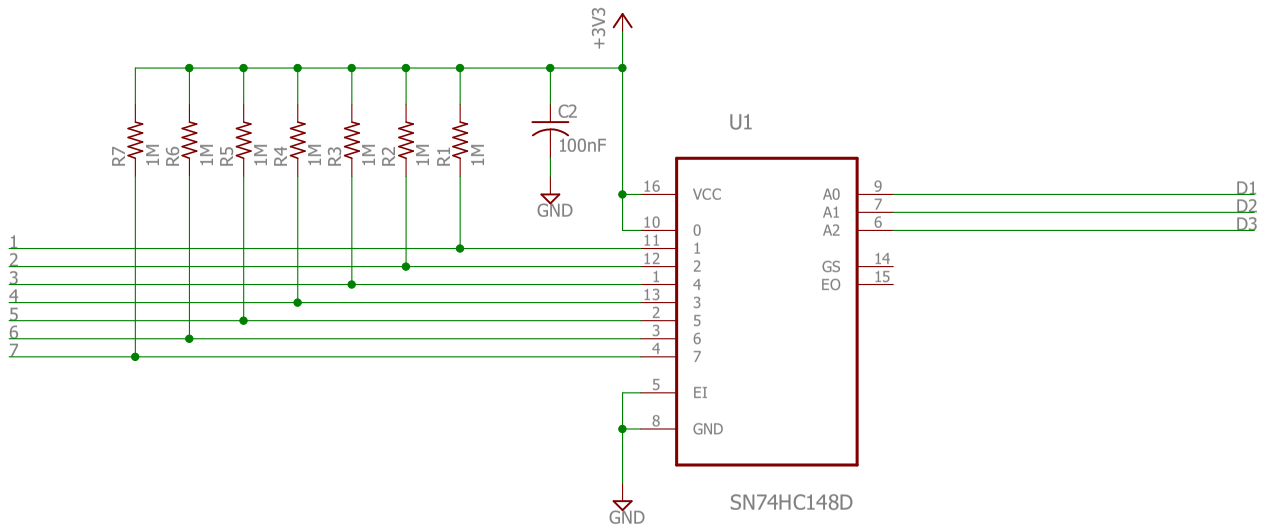

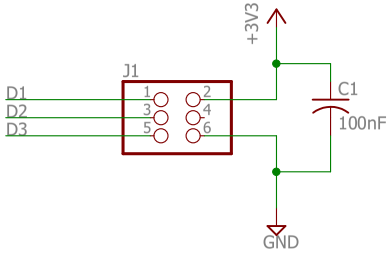

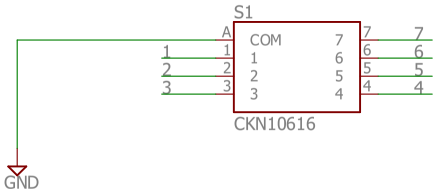

TITLE: divchrono-encoder	
Document Number:	REV:
Date: 10/16/2016 12:47 AM	Sheet: 1/1