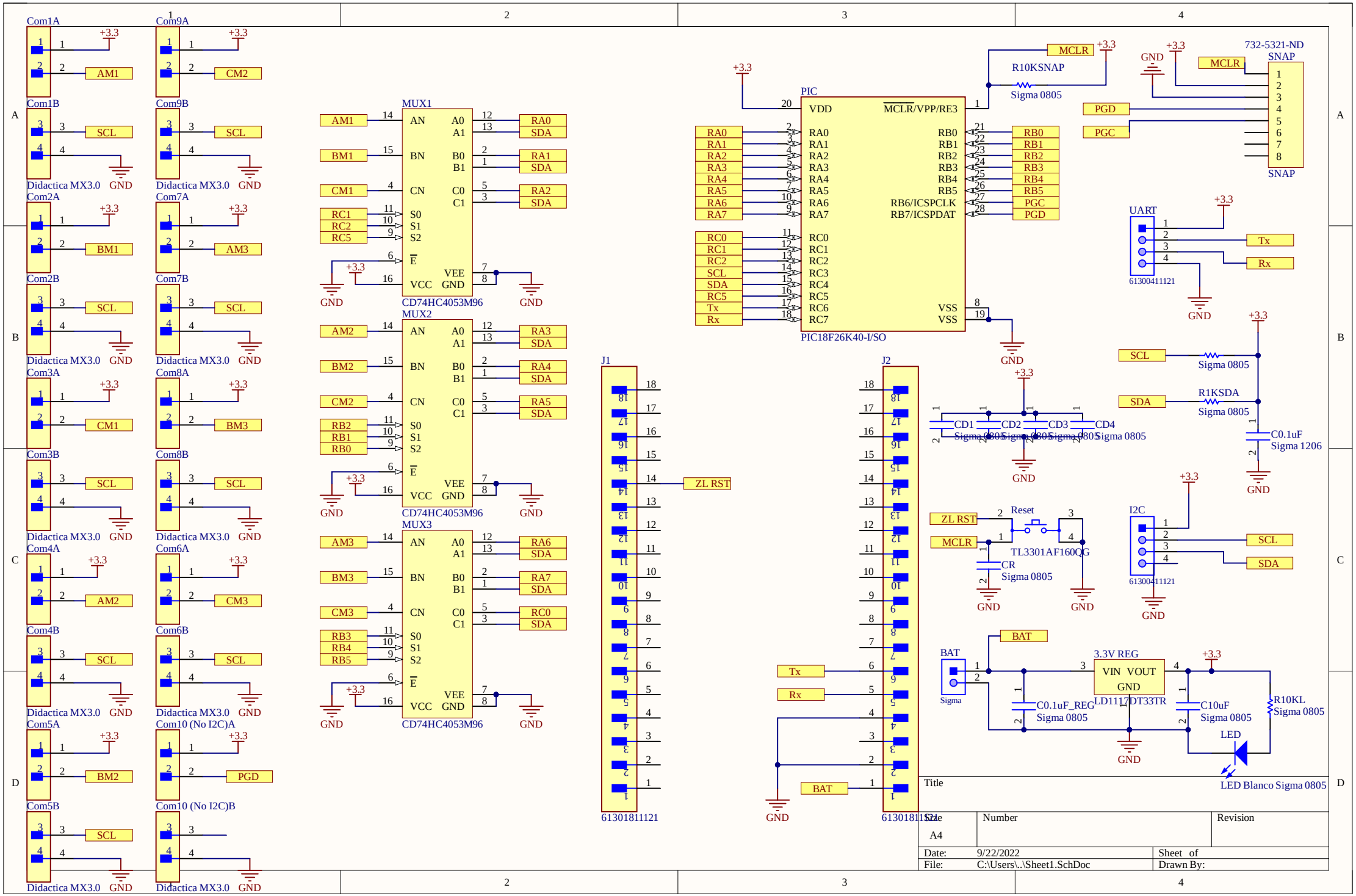
Com1A
Com9A
Com1B
Com9B
Com2A
Com7A
Com2B
Com7B
Com3A
Com8A
Com3B
Com8B
Com4A
Com6A
Com4B
Com6B
Com5A
Com10 (No I2C)A
Com5B
Com10 (No I2C)B
Didactica MX3.0
AM1
CM2
SCL
BM1
AM3
CM1
BM3
AM2
CM3
BM2
PGD
+3.3
GND
MUX1
MUX2
MUX3
CD74HC4053M96
AN
BN
CN
A0
A1
B0
B1
C0
C1
S0
S1
S2
E
VEE
VCC
RA0
RA1
RA2
RA3
RA4
RA5
RA6
RA7
RB0
RB1
RB2
RB3
RB4
RB5
RC0
RC1
RC2
RC5
SDA
J1
J2
ZL RST
61301811121
PIC
VDD
MCLR/VPP/RE3
RB6/ICSPCLK
RB7/ICSPDAT
VSS
RC3
RC4
RC6
RC7
Tx
Rx
PIC18F26K40-I/SO
MCLR
R10KSNAP
Sigma 0805
732-5321-ND
SNAP
UART
CD1
CD2
CD3
CD4
R1KSDA
C0.1uF
Sigma 1206
Reset
TL3301AF160QG
CR
I2C
BAT
3.3V REG
VIN VOUT
GND
LD1117DT33TR
C0.1uF_REG
C10uF
R10KL
LED
LED Blanco Sigma 0805
Title
Size
A4
Number
Revision
Date:
9/22/2022
Sheet of
File:
C:\Users\..\Sheet1.SchDoc
Drawn By:

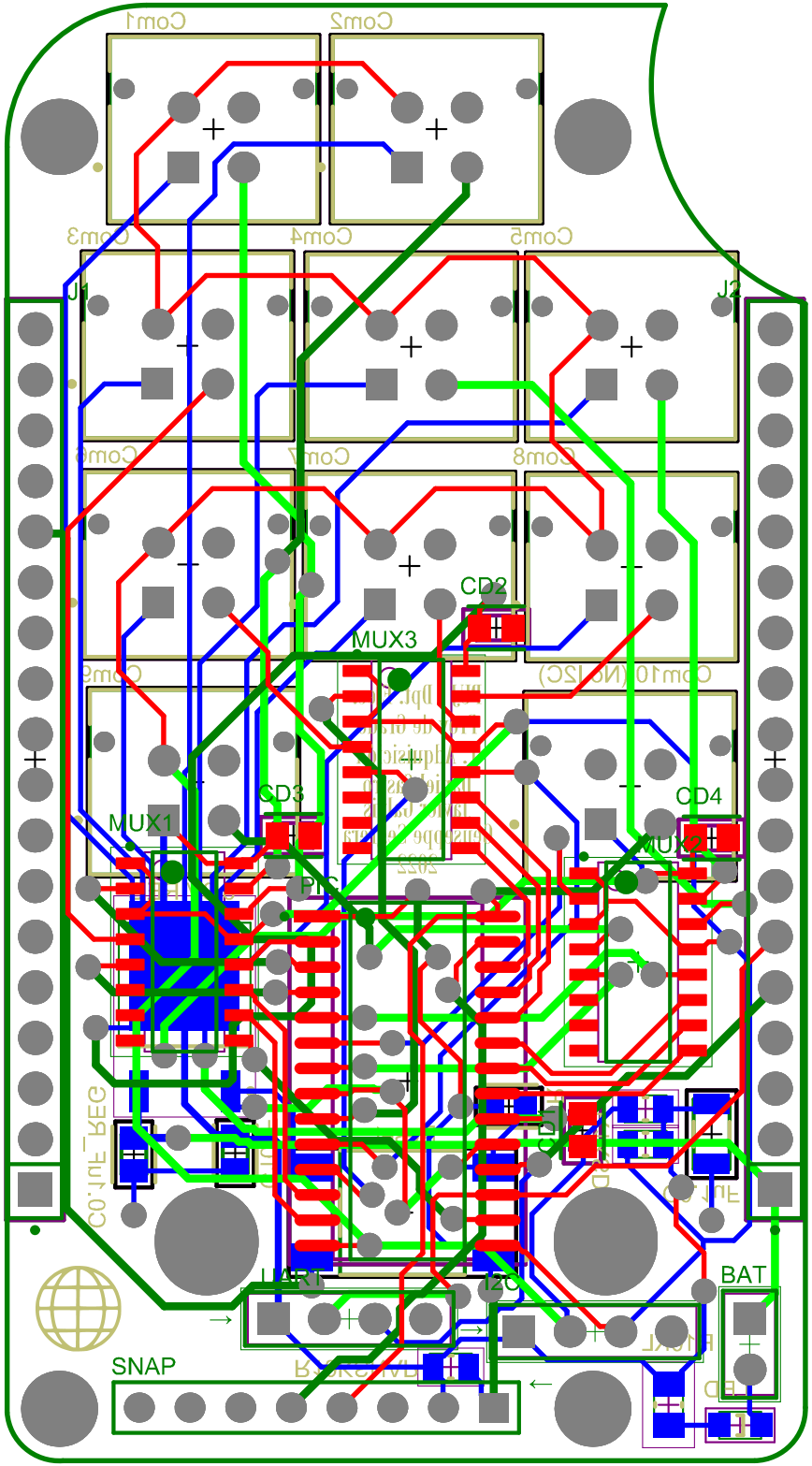
J1
J2
CD2
MUX3
CD3
CD4
MUX1
MUX2
PIC
UART
I2C
BAT
SNAP