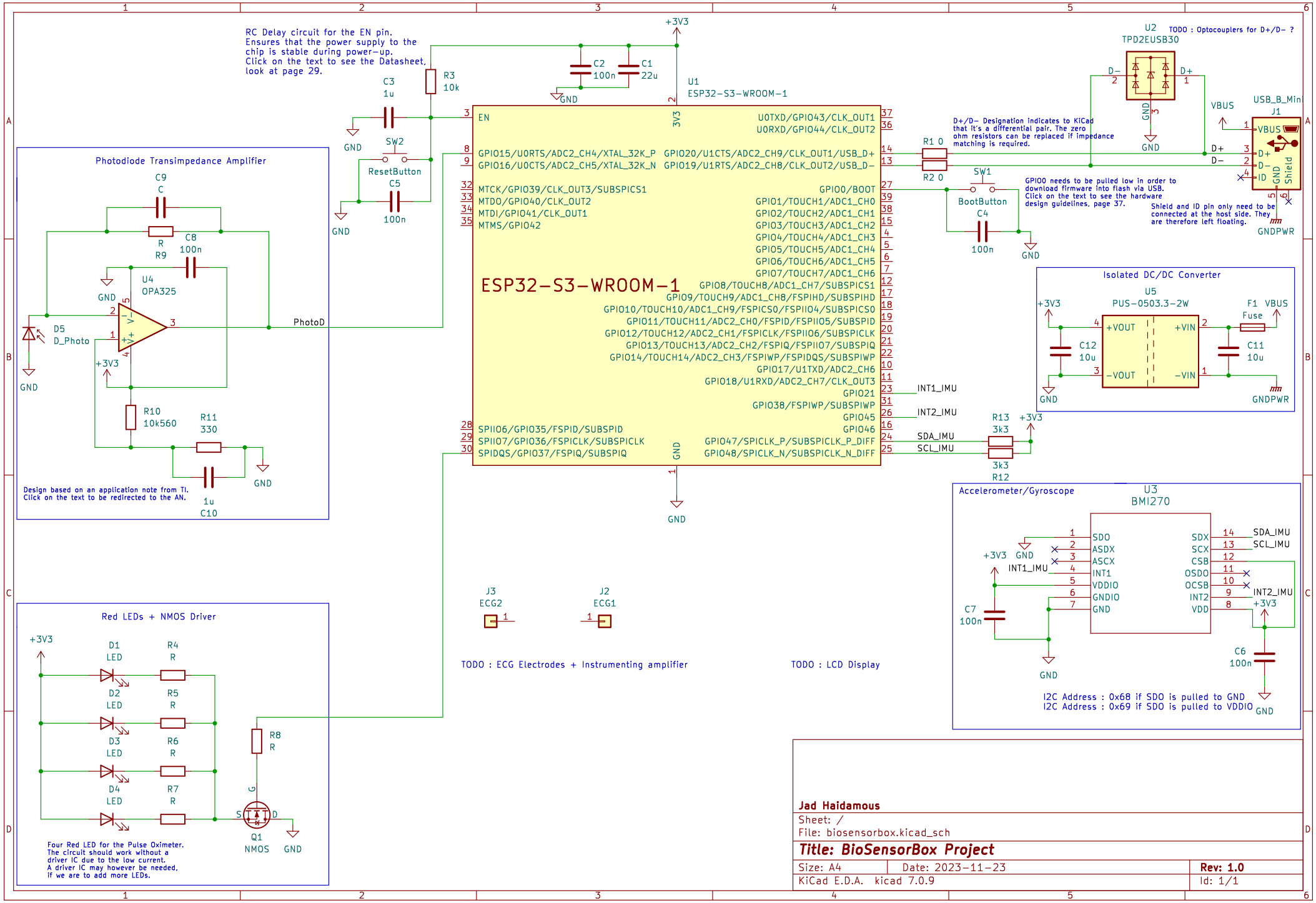
RC Delay circuit for the EN pin.
Ensures that the power supply to the chip is stable during power-up.
Click on the text to see the Datasheet, look at page 29.
+3V3
C2 100n
C1 22u
U1
ESP32-S3-WROOM-1
C3 1u
R3 10k
GND
SW2
ResetButton
C5 100n
EN
3V3
U0TXD/GPIO43/CLK_OUT1
U0RXD/GPIO44/CLK_OUT2
GPIO15/U0RTS/ADC2_CH4/XTAL_32K_P
GPIO16/U0CTS/ADC2_CH5/XTAL_32K_N
GPIO20/U1CTS/ADC2_CH9/CLK_OUT1/USB_D+
GPIO19/U1RTS/ADC2_CH8/CLK_OUT2/USB_D-
MTCK/GPIO39/CLK_OUT3/SUBSPICS1
MTDO/GPIO40/CLK_OUT2
MTDI/GPIO41/CLK_OUT1
MTMS/GPIO42
GPIO0/BOOT
GPIO1/TOUCH1/ADC1_CH0
GPIO2/TOUCH2/ADC1_CH1
GPIO3/TOUCH3/ADC1_CH2
GPIO4/TOUCH4/ADC1_CH3
GPIO5/TOUCH5/ADC1_CH4
GPIO6/TOUCH6/ADC1_CH5
GPIO7/TOUCH7/ADC1_CH6
ESP32-S3-WROOM-1
GPIO8/TOUCH8/ADC1_CH7/SUBSPICS1
GPIO9/TOUCH9/ADC1_CH8/FSPIHD/SUBSPIHD
GPIO10/TOUCH10/ADC1_CH9/FSPICS0/FSPIIO4/SUBSPICS0
GPIO11/TOUCH11/ADC2_CH0/FSPID/FSPIIO5/SUBSPID
GPIO12/TOUCH12/ADC2_CH1/FSPICLK/FSPIIO6/SUBSPICLK
GPIO13/TOUCH13/ADC2_CH2/FSPIQ/FSPIIO7/SUBSPIQ
GPIO14/TOUCH14/ADC2_CH3/FSPIWP/FSPIDQS/SUBSPIWP
GPIO17/U1TXD/ADC2_CH6
GPIO18/U1RXD/ADC2_CH7/CLK_OUT3
GPIO21
GPIO38/FSPIWP/SUBSPIWP
GPIO45
GPIO46
SPIIO6/GPIO35/FSPID/SUBSPID
SPIIO7/GPIO36/FSPICLK/SUBSPICLK
SPIDQS/GPIO37/FSPIQ/SUBSPIQ
GPIO47/SPICLK_P/SUBSPICLK_P_DIFF
GPIO48/SPICLK_N/SUBSPICLK_N_DIFF
INT1_IMU
INT2_IMU
SDA_IMU
SCL_IMU
R13 3k3
R12 3k3
+3V3
Photodiode Transimpedance Amplifier
C9 C
R R9
C8 100n
U4 OPA325
GND
D5 D_Photo
+3V3
PhotoD
R10 10k560
R11 330
1u C10
Design based on an application note from TI.
Click on the text to be redirected to the AN.
U2 TPD2EUSB30
TODO : Optocouplers for D+/D- ?
D-
D+
GND
D+/D- Designation indicates to KiCad that it's a differential pair. The zero ohm resistors can be replaced if impedance matching is required.
R1 0
R2 0
VBUS
USB_B_Mini J1
D+
D-
ID
Shield
GNDPWR
SW1 BootButton
C4 100n
GPIO0 needs to be pulled low in order to download firmware into flash via USB.
Click on the text to see the hardware design guidelines, page 37.
Shield and ID pin only need to be connected at the host side. They are therefore left floating.
Isolated DC/DC Converter
U5 PUS-0503.3-2W
+VOUT
-VOUT
+VIN
-VIN
C12 10u
C11 10u
F1 Fuse
VBUS
GND
GNDPWR
Accelerometer/Gyroscope
U3 BMI270
SDO
ASDX
ASCX
INT1
VDDIO
GNDIO
GND
SDX
SCX
CSB
OSDO
OCSB
INT2
VDD
SDA_IMU
SCL_IMU
INT1_IMU
INT2_IMU
C7 100n
C6 100n
I2C Address : 0x68 if SDO is pulled to GND
I2C Address : 0x69 if SDO is pulled to VDDIO
J3 ECG2
J2 ECG1
TODO : ECG Electrodes + Instrumenting amplifier
TODO : LCD Display
Red LEDs + NMOS Driver
D1 LED
D2 LED
D3 LED
D4 LED
R4 R
R5 R
R6 R
R7 R
R8 R
Q1 NMOS
Four Red LED for the Pulse Oximeter.
The circuit should work without a driver IC due to the low current.
A driver IC may however be needed, if we are to add more LEDs.
Jad Haidamous
Sheet: /
File: biosensorbox.kicad_sch
Title: BioSensorBox Project
Size: A4
Date: 2023-11-23
Rev: 1.0
KiCad E.D.A. kicad 7.0.9
Id: 1/1