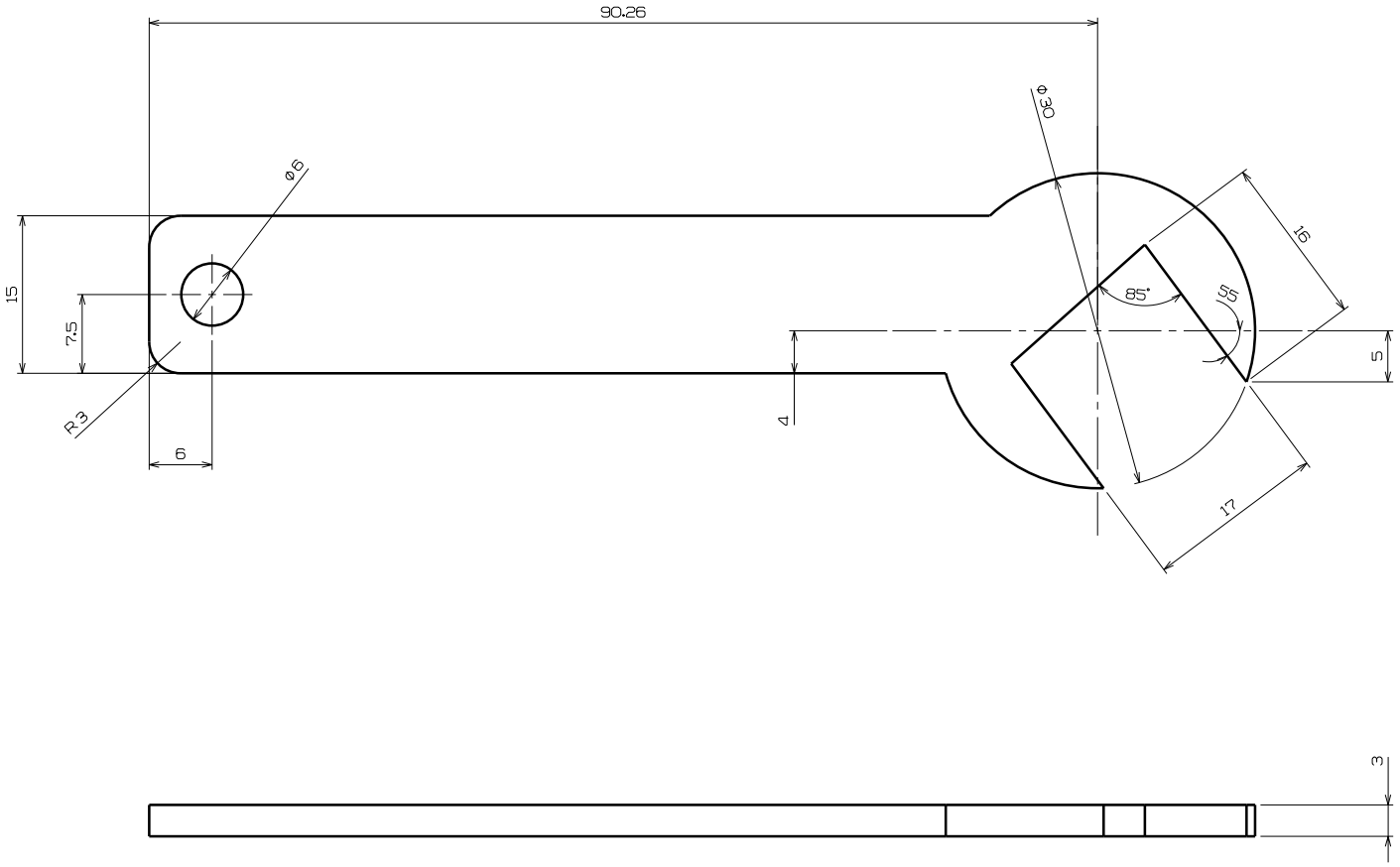

This drawing is our property. It can't be reproduced or communicated without our written agreement.		http://www.studycadcam.com		
DRAWN BY studycadcam	DATE -	DRAWING TITLE 3D모델링 연습도면 778		
CHECKED BY studycadcam	DATE -	SIZE A3	DRAWING NUMBER 3D-DP778	REV 0
DESIGNED BY studycadcam	DATE -	SCALE 2:1	WEIGHT(g) -	SHEET 1/1