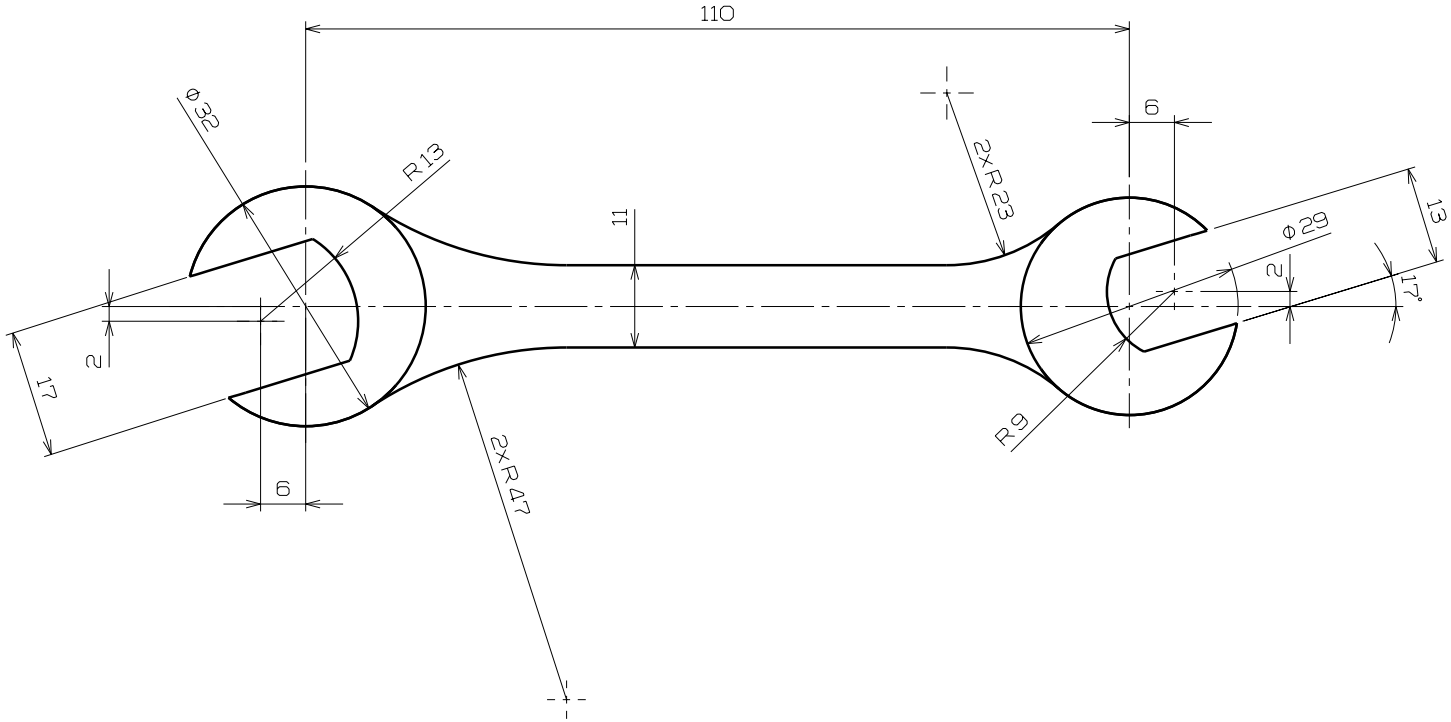

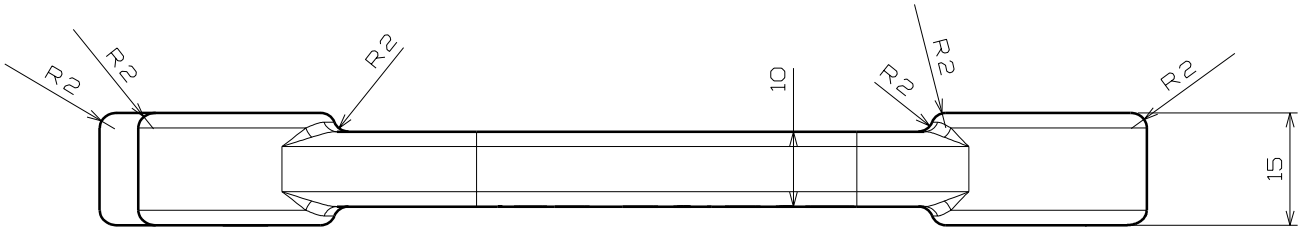

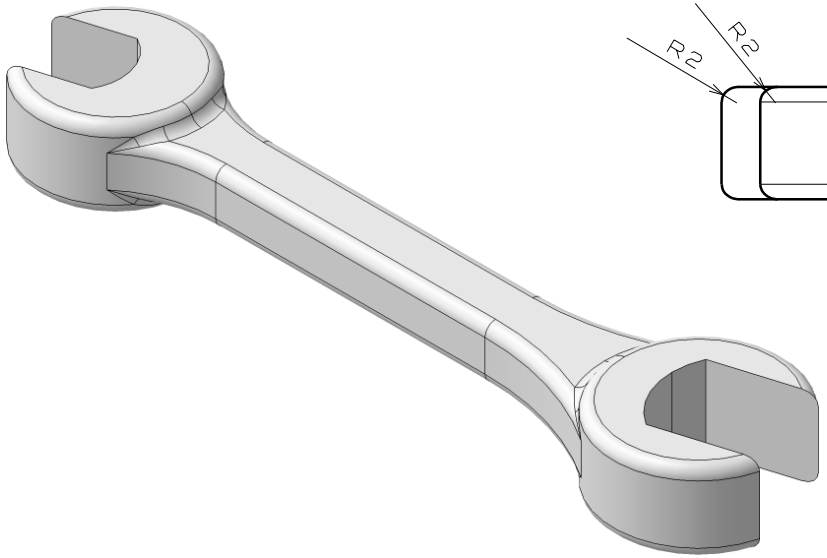

This drawing is our property. It can't be reproduced or communicated without our written agreement.

http://www.studycadcam.com

DRAWN BY studycadcam	DATE -	DRAWING TITLE 3D모델링 연습도면 780		
CHECKED BY studycadcam	DATE -	SIZE A4	DRAWING NUMBER 3D-DP780	REV 0
DESIGNED BY studycadcam	DATE -	SCALE 1:1	WEIGHT(g) -	SHEET 1/1