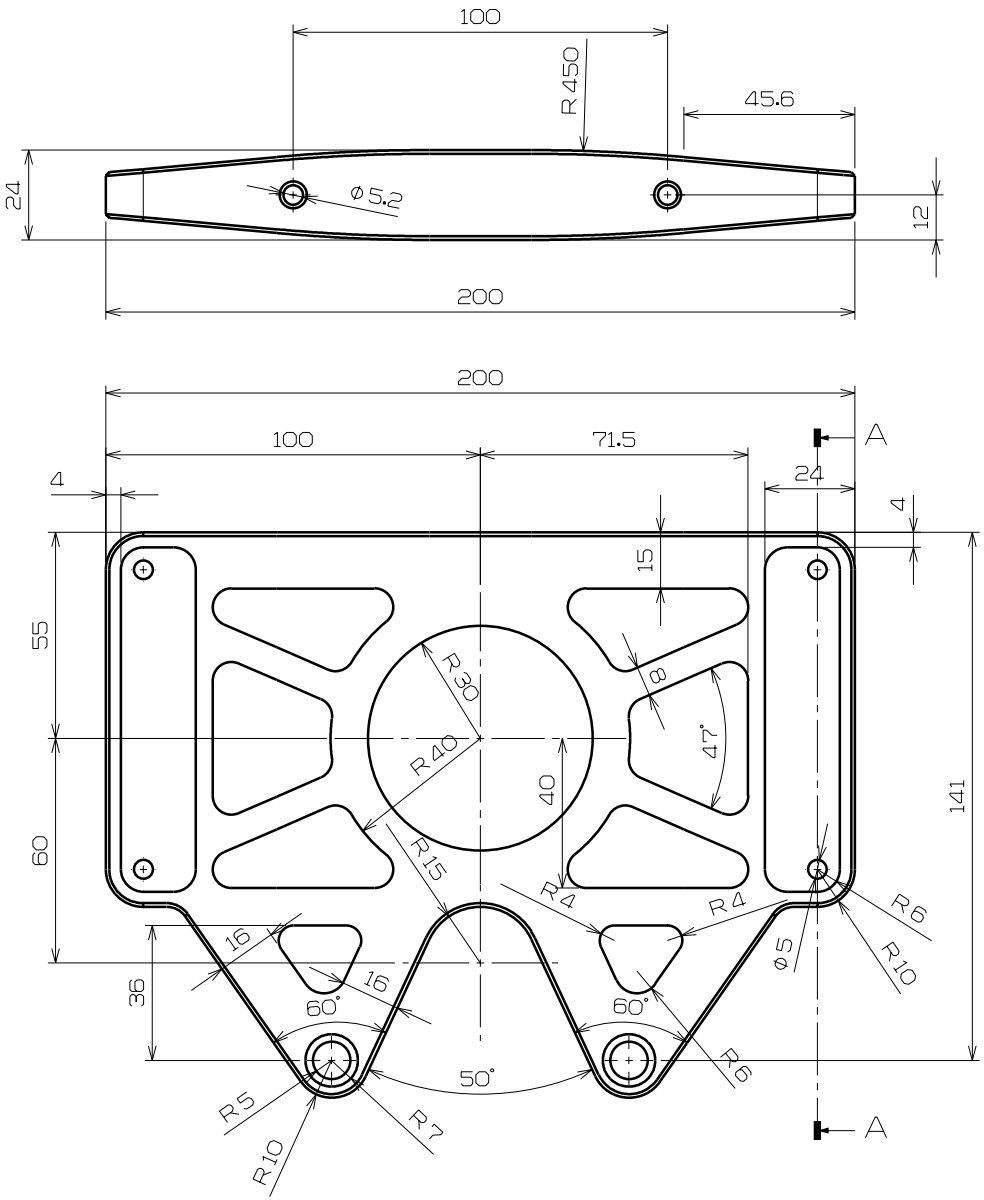

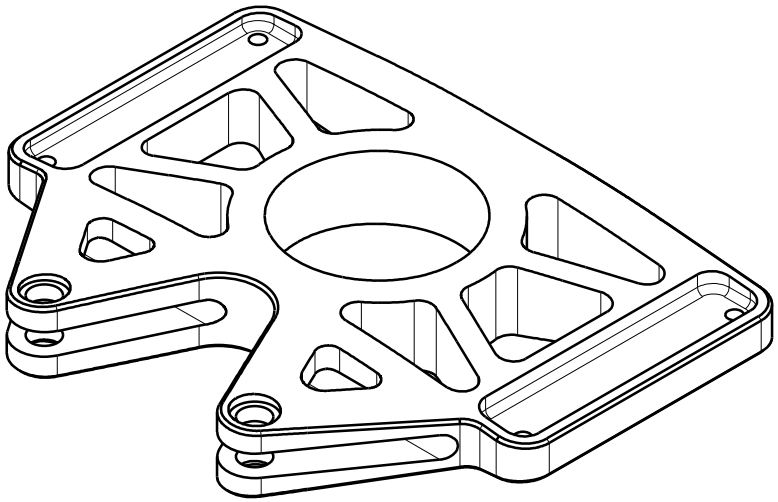

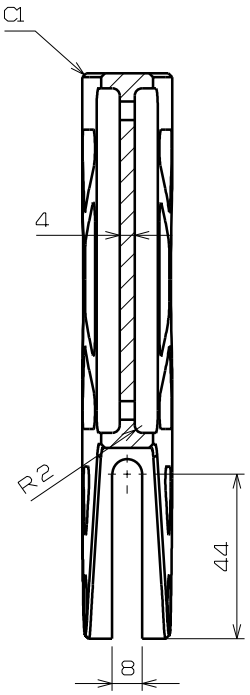

SECTION A–A

This drawing is our property. It can't be reproduced or communicated without our written agreement.		http://www.studycadcam.com		
DRAWN BY studycadcam	DATE –	DRAWING TITLE 3D모델링 연습도면 755		
CHECKED BY studycadcam	DATE –	SIZE A4	DRAWING NUMBER 3D–DP755	REV 0
DESIGNED BY studycadcam	DATE –	SCALE 1:2	WEIGHT(g) –	SHEET 5/17