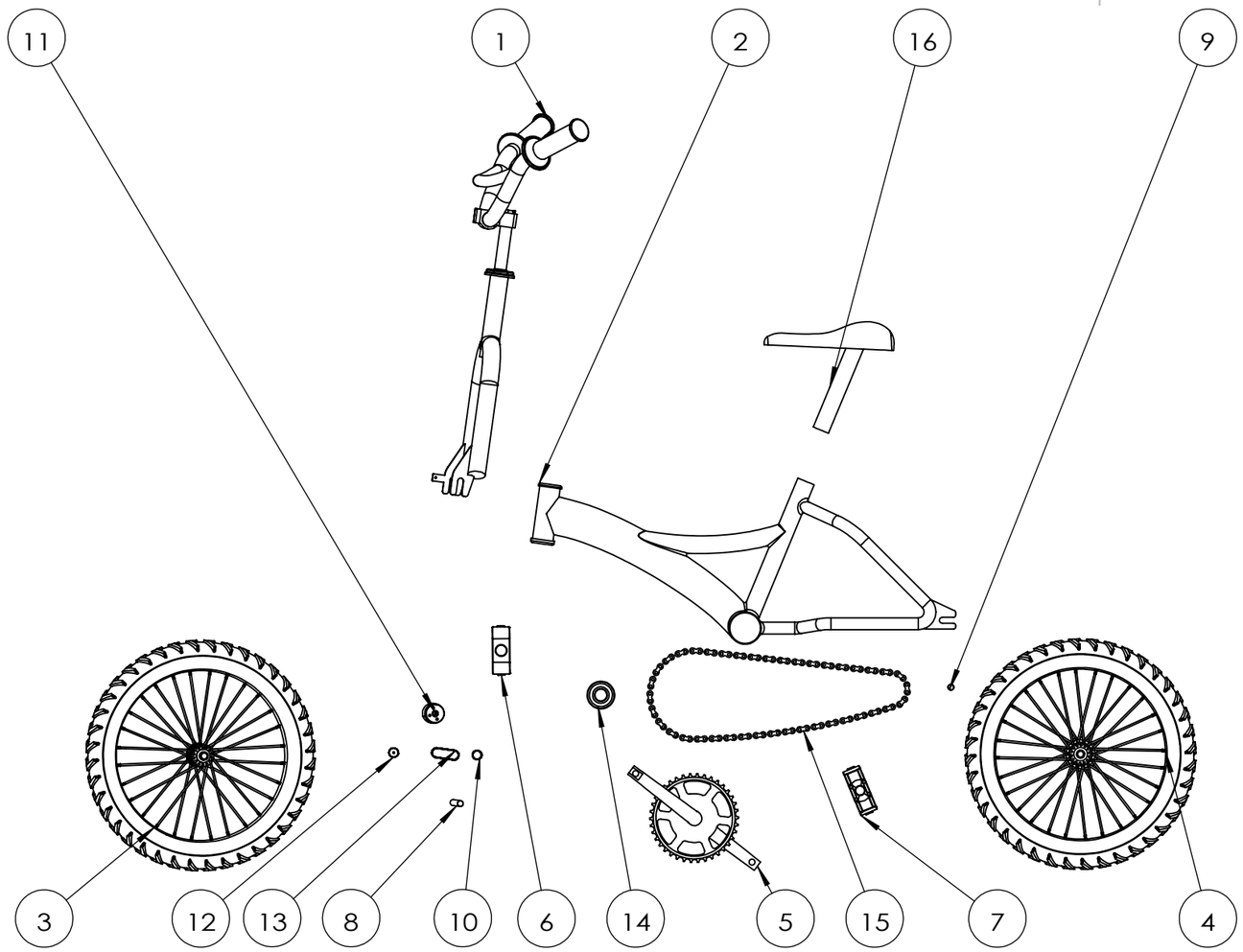

ITEM NO.	PART NUMBER	DESCRIPTION	QTY.
1	1. Steering	Control direction	1
2	2. Frame	Fixation and support	1
3	9. Front tyre	Rilling friction	1
4	3. Rear tyre	Rilling friction	1
5	4. Sprocket with padle link	Power conversion	1
6	8. Left padel	Provide power	1
7	10. Right padel	Provide power	1
8	7. Front pin	Fixation	1
9	11. Rear pin	Fixation	1
10	22. Motor gear 1	Linkage	1
11	Motor assembly	Engine	1
12	23. Motor gear 2	Linkage	1
13	24. Motor chain	Linkage	1
14	AS_ISO 15 RBB - 4220 - 10,SI,NC,10_68	Linkage	1
15	6. Inner chain	Linkage	1
16	5. Seat	Seat	1

UNLESS OTHERWISE SPECIFIED:
DIMENSIONS ARE IN MILLIMETERS
SURFACE FINISH:
TOLERANCES:
LINEAR:
ANGULAR:

FINISH:

DEBURR AND BREAK SHARP EDGES

DO NOT SCALE DRAWING

REVISION

	NAME	SIGNATURE	DATE
DRAWN	JING FAN		
CHK'D			
APPV'D			
MFG			
Q.A			

TITLE:

Bike exploded

MATERIAL:
satin finish stainless steel/
matte rubber/
polished aluminum

WEIGHT:

DWG NO. 2

A3

SCALE:1:20

SHEET 1 OF 1

SOLIDWORKS Educational Product. For Instructional Use Only.