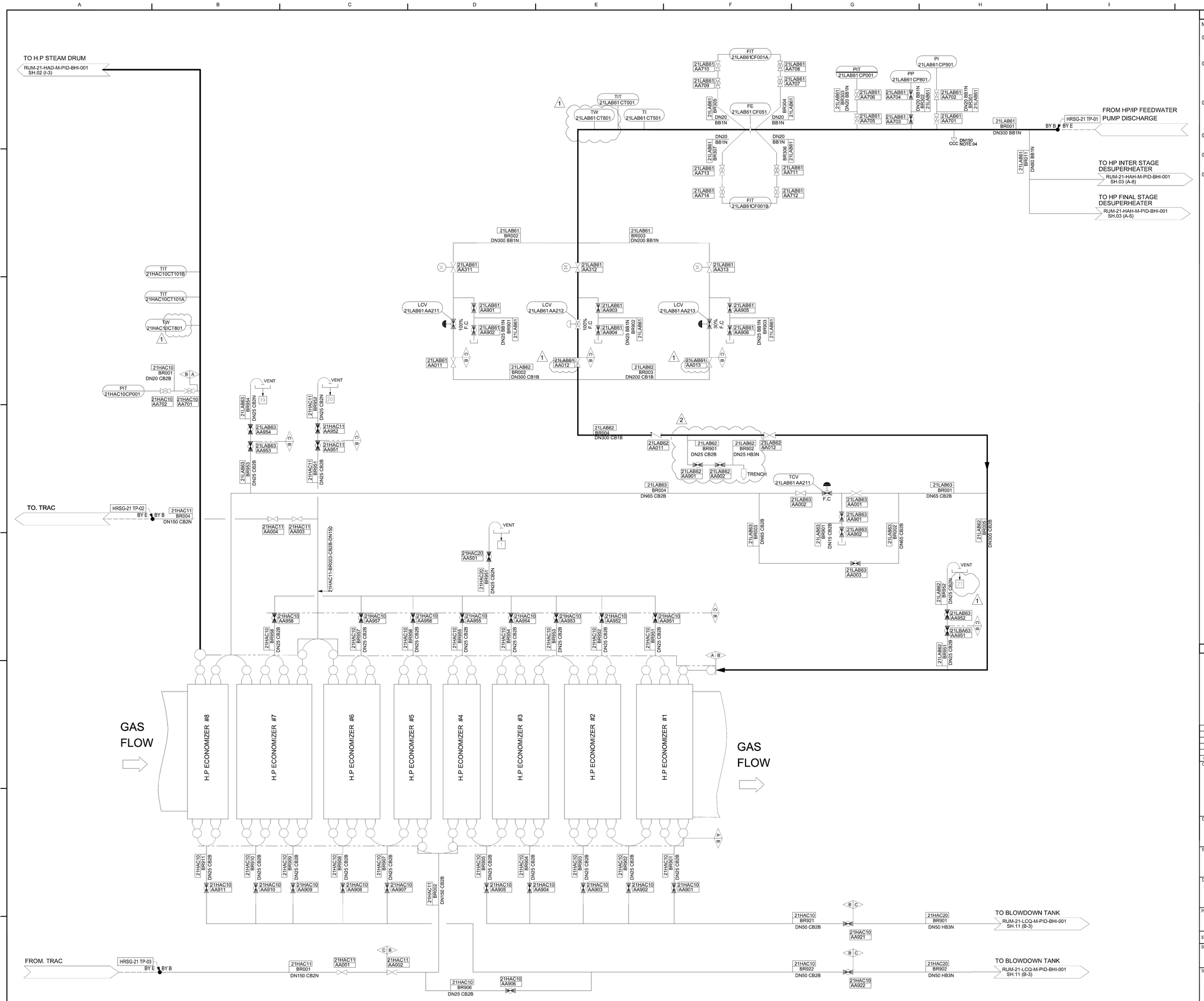

GENERAL NOTES

NOTE :

01. THE PLANT CODE ON DRAWING SHOW "21" FOR FIRST HRSG BLOCK 2x2x1. THERFORE. CONSIDER "22" FOR SECOND HRSG BLOCK 2X2X1.

02. SCOPE

BY B BY E — B : BHI, E : EPC

03. CODE LIMIT PIPING
A : BOILER PROPER
B : BEP
C : NBEP

04. CCC : CHEMICAL CLEANING CONNECTION

05. X : CONNECTION FOR VENT FUNNEL DRAIN (REFER TO SH.13)

06. : LOCAL MAINTENANCE DRAIN FOR VISUAL CHECK

REFERENCE DRAWINGS

REV.	DATE	DESCRIPTION	DESIGNED	CHECKED	APPROVED
1	14.03.2025	FOR APPROVAL	K.J.LEE	W.J.CHOI	S.H.YOO
0	24.01.2025	FOR APPROVAL	K.J.LEE	W.J.CHOI	S.H.YOO

OFFTAKER: المشتري الرئيس PRINCIPAL BUYER

DEVELOPERS: TAQA, jera, Al Bowsher Capital

EPC CONTRACTOR: 哈尔滨电气国际工程有限责任公司 HARBIN ELECTRIC INTERNATIONAL COMPANY LIMITED; 中铁四局集团有限公司 CHINA TIESIJU CIVIL ENGINEERING GROUP CO., LTD.

DESIGNER: IDOM, CINEC NEPDI

PROJECT: **RUMAH 2 IPP**

STATUS: FOR REVIEW ☐ FOR APPROVAL ☐ APPROVED FOR CONSTRUCTION ☐ AS BUILT ☐

SCALE: -

DESIGNED BY:	S.H.YOO	
CHECKED BY:	W.J.CHOI	
APPROVED BY:	K.J.LEE	
DATE:	24.01.2025	

DOCUMENT OWNER: BHI.CO.,LTD.

TITLE: P&ID FOR H.P FEEDWATERSYSTEM

CONTRACT No: - | SIZE: A0

PAGE No.: 01 OF 15

DRAWING No.: RUM-21-LAB-M-PID-BHI-001 | REV.: 1

DIN A-0 SIZE (1189x841)

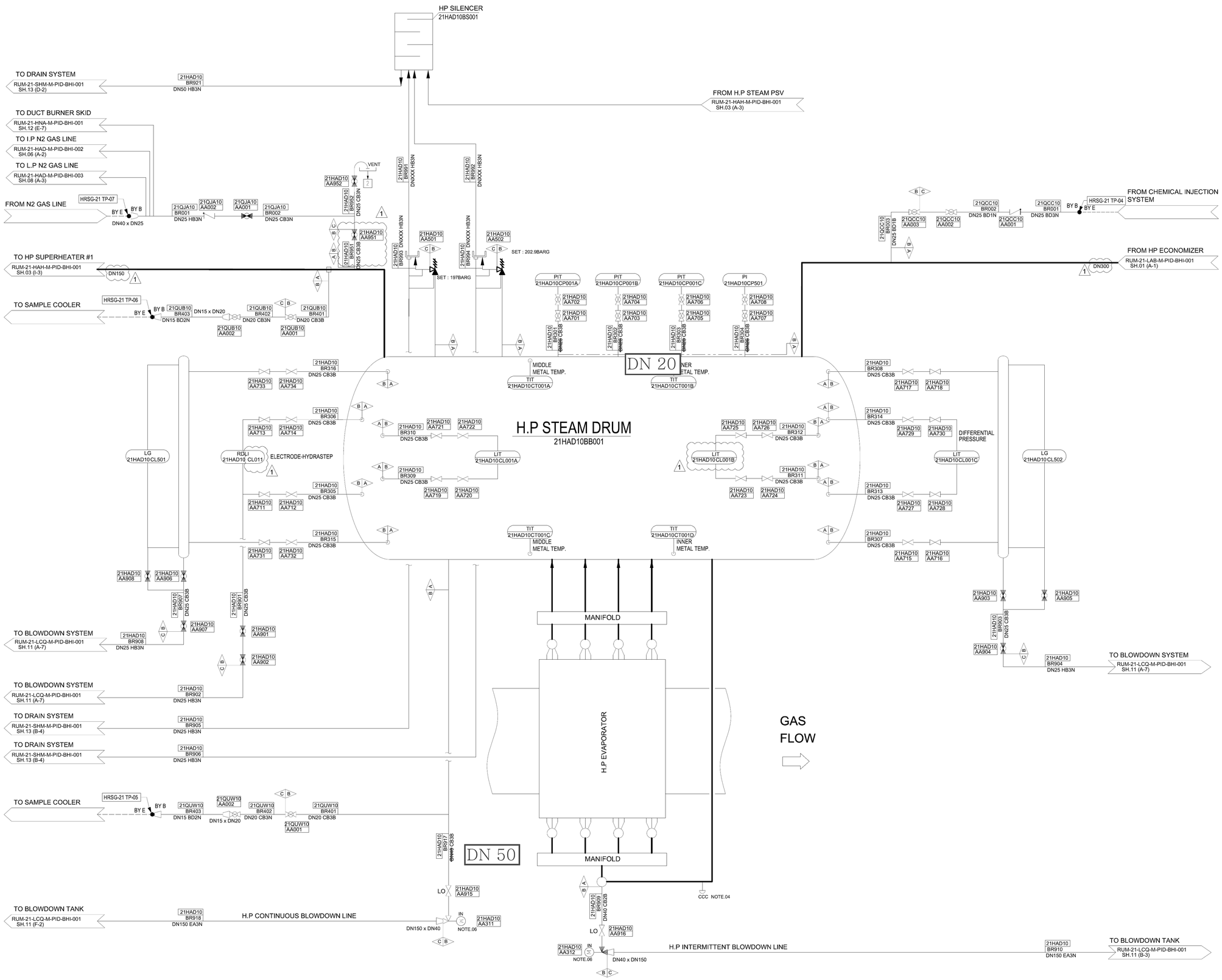

GENERAL NOTES

NOTE :

01. THE PLANT CODE ON DRAWING SHOW "21" FOR FIRST HRSG BLOCK 2x2x1. THERFORE. CONSIDER "22" FOR SECOND HRSG BLOCK 2X2X1.

02. SCOPE

BY B BY E — B : BHI, E : EPC

03. CODE LIMIT PIPING
A : BOILER PROPER
B : BEP
C : NBEP

04. CCC : CHEMICAL CLEANING CONNECTION

05. ☐ : STEAM SAMPLING NOZZLE

06. LOCATE HRSG DRUM INTERMITTENT AND CONTINOUS BLOWDOWN VALVES AS CLOSE AS PRACTICAL TO BLOWDOWN TANK.

07. [X] : CONNECTION FOR VENT FUNNEL DRAIN (REFER TO SH.13)

08. : LOCAL MAINTENANCE DRAIN FOR VISUAL CHECK

REFERENCE DRAWINGS

REV.	DATE	DESCRIPTION	DESIGNED	CHECKED	APPROVED
1	14.03.2025	FOR APPROVAL	K.J.LEE	W.J.CHOI	S.H.YOO
0	24.01.2025	FOR APPROVAL	K.J.LEE	W.J.CHOI	S.H.YOO

OFFTAKER: PRINCIPAL BUYER

DEVELOPERS: TAQA, jera, Al Biomass Capital

EPC CONTRACTOR: 哈尔滨电气国际工程有限责任公司 HARBIN ELECTRIC INTERNATIONAL COMPANY LIMITED; 中铁四局集团有限公司 CHINA TIESIJU CIVIL ENGINEERING GROUP CO., LTD.

DESIGNER: IDOM, CINGC NEPDI

PROJECT: **RUMAH 2 IPP**

STATUS: FOR REVIEW ☐ FOR APPROVAL ☐ APPROVED FOR CONSTRUCTION ☐ AS BUILT ☐

SCALE: -

DESIGNED BY:	S.H.YOO	
CHECKED BY:	W.J.CHOI	
APPROVED BY:	K.J.LEE	
DATE:	24.01.2025	

DOCUMENT OWNER: BHI.CO.,LTD.

TITLE: P&ID FOR H.P STEAM DRUM SYSTEM

CONTRACT No. - | SIZE: A0

PAGE No. 02 OF 15

DRAWING No. RUM-21-HAD-M-PID-BHI-001 | REV. 1

DIN A-0 SIZE (1189x841)

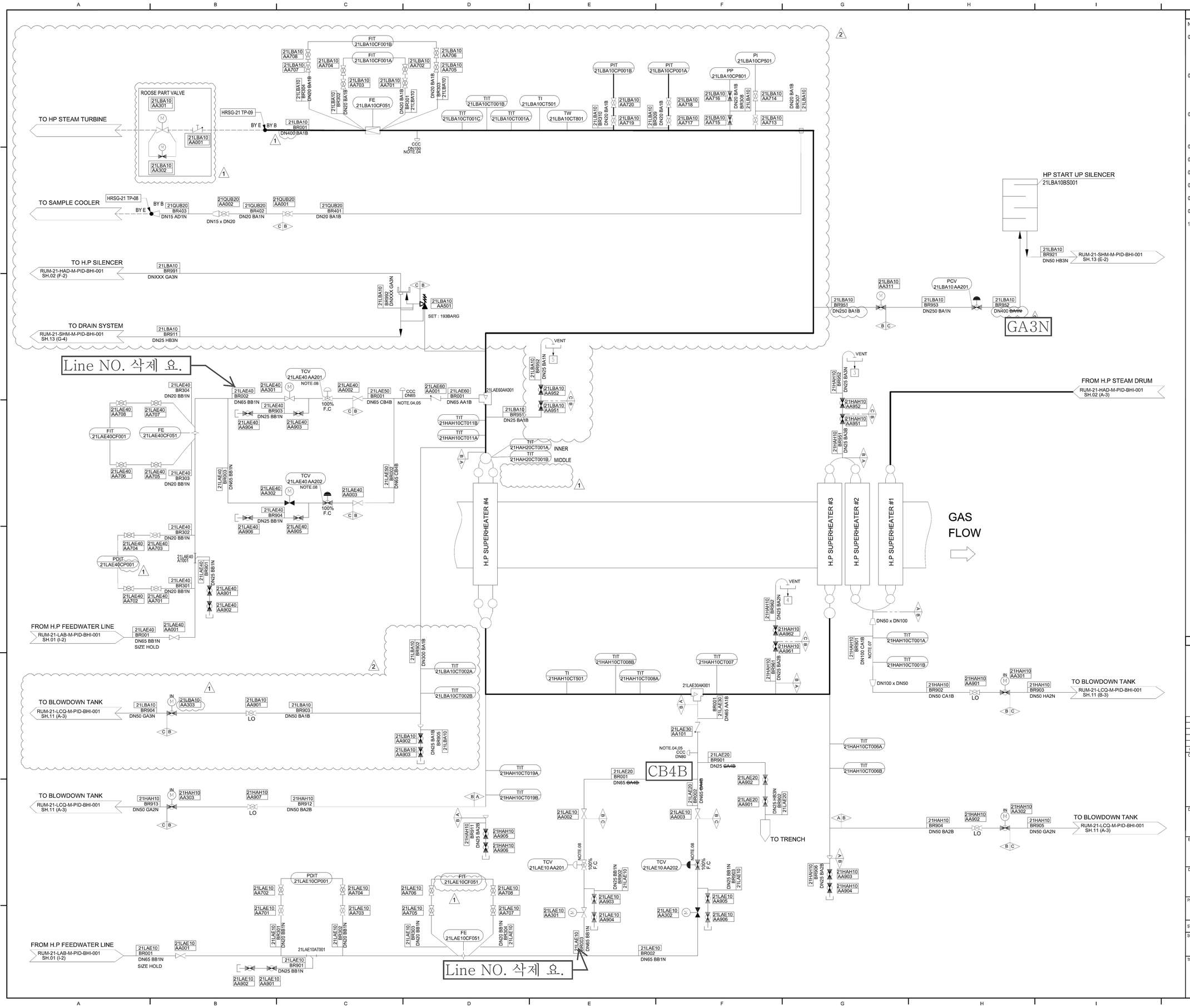

GENERAL NOTES

NOTE :

01. THE PLANT CODE ON DRAWING SHOW "21" FOR FIRST HRSG BLOCK 2x2x1. THERFORE. CONSIDER "22" FOR SECOND HRSG BLOCK 2X2X1.

02. SCOPE

BY B — BY E B : BHI E : EPC

03. CODE LIMIT PIPING

A : BOILER PROPER
B : BEP
C : NBEP

04. CCC : CHEMICAL CLEANING CONNECTION

05. FOR PRESSURE TEST PROVISION AS WELL

06. ☐ : STEAM SAMPLING NOZZLE

07. LOCATION SHALL BE CLOSED TO MODULE AND VERTICAL ARRANGEMENT IS PREFERRED.

08. TCV SHALL BE LOCATED LOWER THAN SPRAY NOZZLE.

09. [X] : CONNECTION FOR VENT FUNNEL DRAIN (REFER TO SH.13)

10. : LOCAL MAINTENANCE DRAIN FOR VISUAL CHECK

REFERENCE DRAWINGS

REV.	DATE	DESCRIPTION	DESIGNED	CHECKED	APPROVED
1	14.03.2025	FOR APPROVAL	K.J.LEE	W.J.CHOI	S.H.YOO
0	24.01.2025	FOR APPROVAL	K.J.LEE	W.J.CHOI	S.H.YOO

OFFTAKER: المشتري الرئيس PRINCIPAL BUYER

DEVELOPERS: TAQA, Jera, Al Bowsher Capital

EPC CONTRACTOR: 哈尔滨电气国际工程有限责任公司 HARBIN ELECTRIC INTERNATIONAL COMPANY LIMITED; 中铁四局集团有限公司 CHINA TIESIJU CIVIL ENGINEERING GROUP CO. LTD.

DESIGNER: IDOM, CNEC NEPDI

PROJECT: **RUMAH 2 IPP**

STATUS: FOR REVIEW ☐ FOR APPROVAL ☐ APPROVED FOR CONSTRUCTION ☐ AS BUILT ☐

SCALE: -

DESIGNED BY:	S.H.YOO
CHECKED BY:	W.J.CHOI
APPROVED BY:	K.J.LEE
DATE:	24.01.2025

DOCUMENT OWNER: BHI.CO.,LTD.

TITLE: P&ID FOR H.P SUPERHEATER SYSTEM

CONTRACT No: - | SIZE: A0

PAGE No.: 03 OF 15

DRAWING No.: RUM-21-HAH-M-PID-BHI-001 | REV.: 1

DIN A-0 SIZE (1189x841)

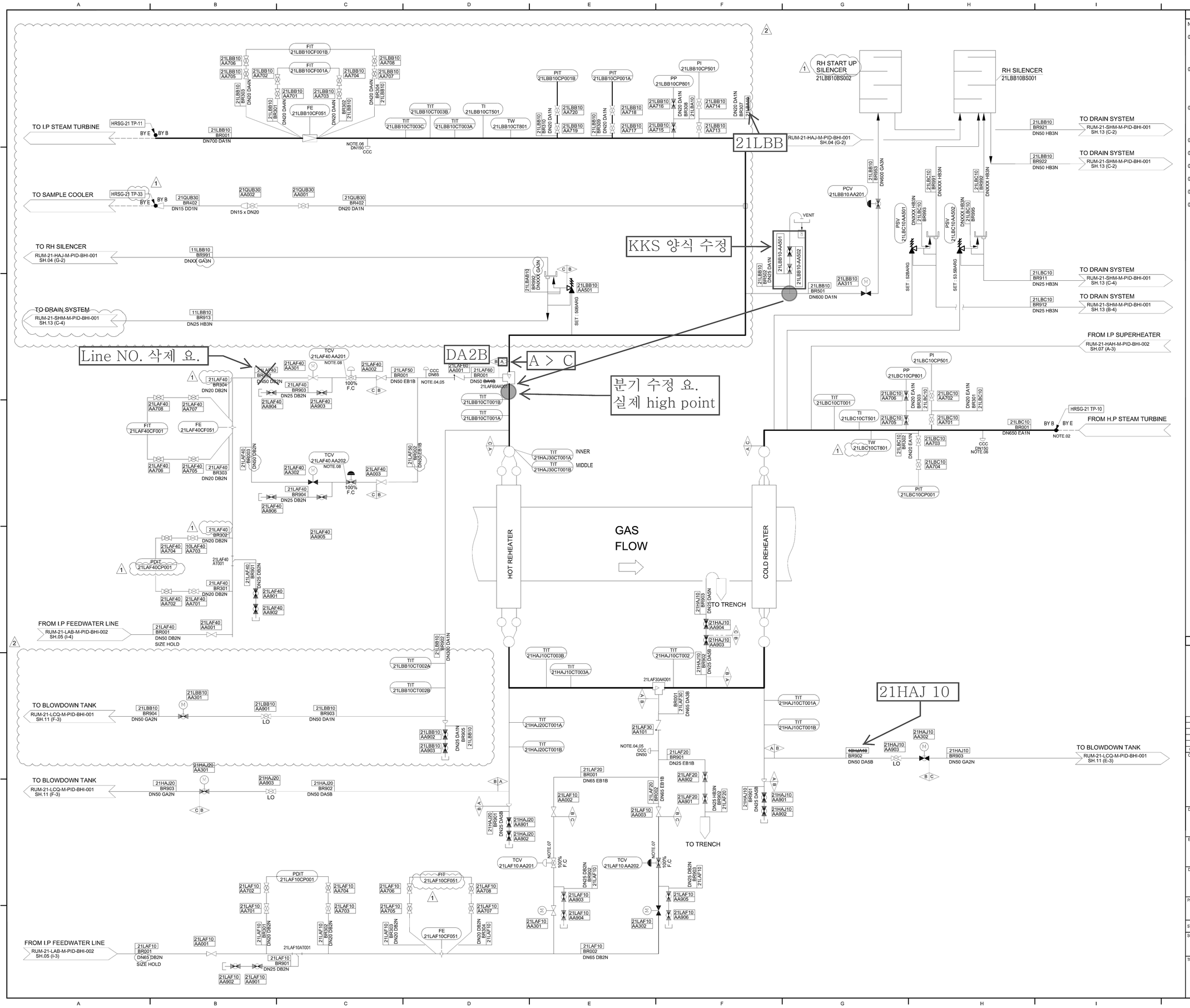

GENERAL NOTES

NOTE :

01. THE PLANT CODE ON DRAWING SHOW "21" FOR FIRST HRSG BLOCK 2x2x1. THERFORE. CONSIDER "22" FOR SECOND HRSG BLOCK 2X2X1.

02. SCOPE

BY B BY E — B : BHI, E : EPC

03. CODE LIMIT PIPING
A : BOILER PROPER
B : BEP
C : NBEP

04. CCC : CHEMICAL CLEANING CONNECTION

05. FOR PRESSURE TEST PROVISION AS WELL

06. ☐ : STEAM SAMPLING NOZZLE

07. TCV SHALL BE LOCATED LOWER THAN SPRAY NOZZLE.

08. X : CONNECTION FOR VENT FUNNEL DRAIN (REFER TO SH.13)

09. : LOCAL MAINTENANCE DRAIN FOR VISUAL CHECK

REFERENCE DRAWINGS

REV	DATE	DESCRIPTION	DESIGNED	CHECKED	APPROVED
1	14.03.2025	FOR APPROVAL	K.J.LEE	W.J.CHOI	S.H.YOO
0	24.01.2025	FOR APPROVAL	K.J.LEE	W.J.CHOI	S.H.YOO

OFFTAKER: PRINCIPAL BUYER

DEVELOPERS: TAQA, jera, Al Borouq Capital

EPC CONTRACTOR: 哈尔滨电气国际工程有限责任公司 HARBIN ELECTRIC INTERNATIONAL COMPANY LIMITED; 中铁四局集团有限公司 CHINA TIESIJU CIVIL ENGINEERING GROUP CO., LTD.

DESIGNER: IDOM, GINGE NEPDI

PROJECT: **RUMAH 2 IPP**

STATUS: FOR REVIEW ☐ FOR APPROVAL ☐ APPROVED FOR CONSTRUCTION ☐ AS BUILT ☐

SCALE: -

DESIGNED BY:	S.H.YOO	
CHECKED BY:	W.J.CHOI	
APPROVED BY:	K.J.LEE	
DATE:	24.01.2025	

DOCUMENT OWNER: BHI.CO.,LTD.

TITLE: P&D FOR REHEATER SYSTEM

CONTRACT No.	-
SIZE	A0
PAGE No.	04 OF 15
DRAWING No.	RUM-21-HAJ-M-PID-BHI-001
REV.	1

DIN A-0 SIZE (1189x841)

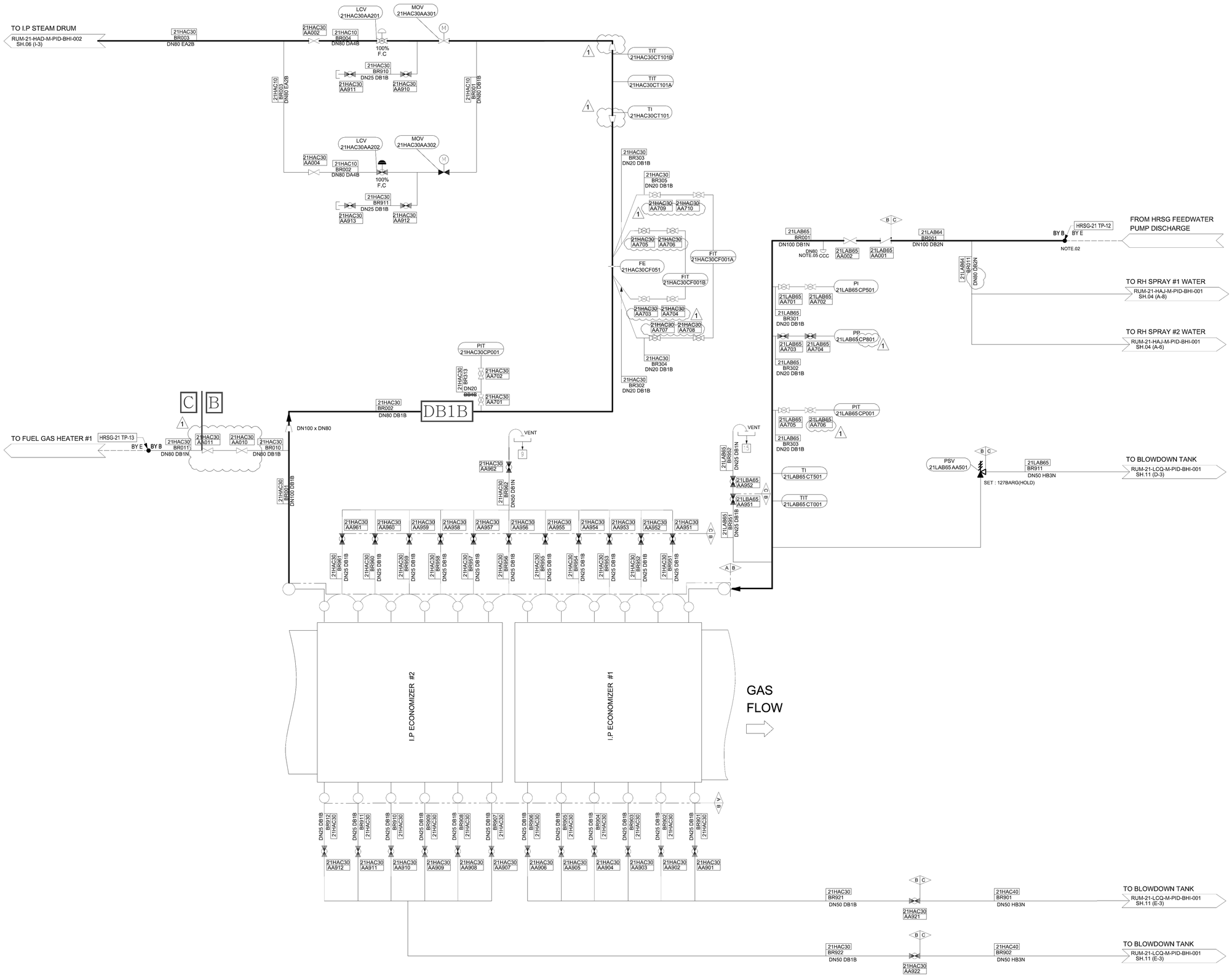

GENERAL NOTES

NOTE :

01. THE PLANT CODE ON DRAWING SHOW "21" FOR FIRST HRSG BLOCK 2x2x1. THERFORE. CONSIDER "22" FOR SECOND HRSG BLOCK 2X2X1.

02. SCOPE

BY B BY E — B : BHI, E : EPC

03. CODE LIMIT PIPING
A : BOILER PROPER
B : BEP
C : NBEP

04. CCC : CHEMICAL CLEANING CONNECTION

05 X : CONNECTION FOR VENT FUNNEL DRAIN (REFER TO SH.13)

06. : LOCAL MAINTENANCE DRAIN FOR VISUAL CHECK

REFERENCE DRAWINGS

REV.	DATE	DESCRIPTION	DESIGNED	CHECKED	APPROVED
1	14.03.2025	FOR APPROVAL	K.J.LEE	W.J.CHOI	S.H.YOO
0	24.01.2025	FOR APPROVAL	K.J.LEE	W.J.CHOI	S.H.YOO

OFFTAKER: PRINCIPAL BUYER

DEVELOPERS: TAQA, jera, Al Bowsher Capital

EPC CONTRACTOR: 哈尔滨电气国际工程有限责任公司 HARBIN ELECTRIC INTERNATIONAL COMPANY LIMITED; 中铁四局集团有限公司 CHINA TIESIJU CIVIL ENGINEERING GROUP CO., LTD.

DESIGNER: IDOM, CINCC NEPDI

PROJECT: **RUMAH 2 IPP**

STATUS: FOR REVIEW ☐ FOR APPROVAL ☐ APPROVED FOR CONSTRUCTION ☐ AS BUILT ☐

SCALE: -

DESIGNED BY:	K.J.LEE
CHECKED BY:	W.J.CHOI
APPROVED BY:	S.H.YOO
DATE:	24.01.2025

DOCUMENT OWNER: BHI.CO.,LTD.

TITLE: P&ID FOR I.P FEED WATER SYSTEM

CONTRACT No: -

SIZE: A0

PAGE No.: 05 OF 15

DRAWING No.: RUM-21-LAB-M-PID-BHI-002

REV.: 1

DIN A-0 SIZE (1189x841)

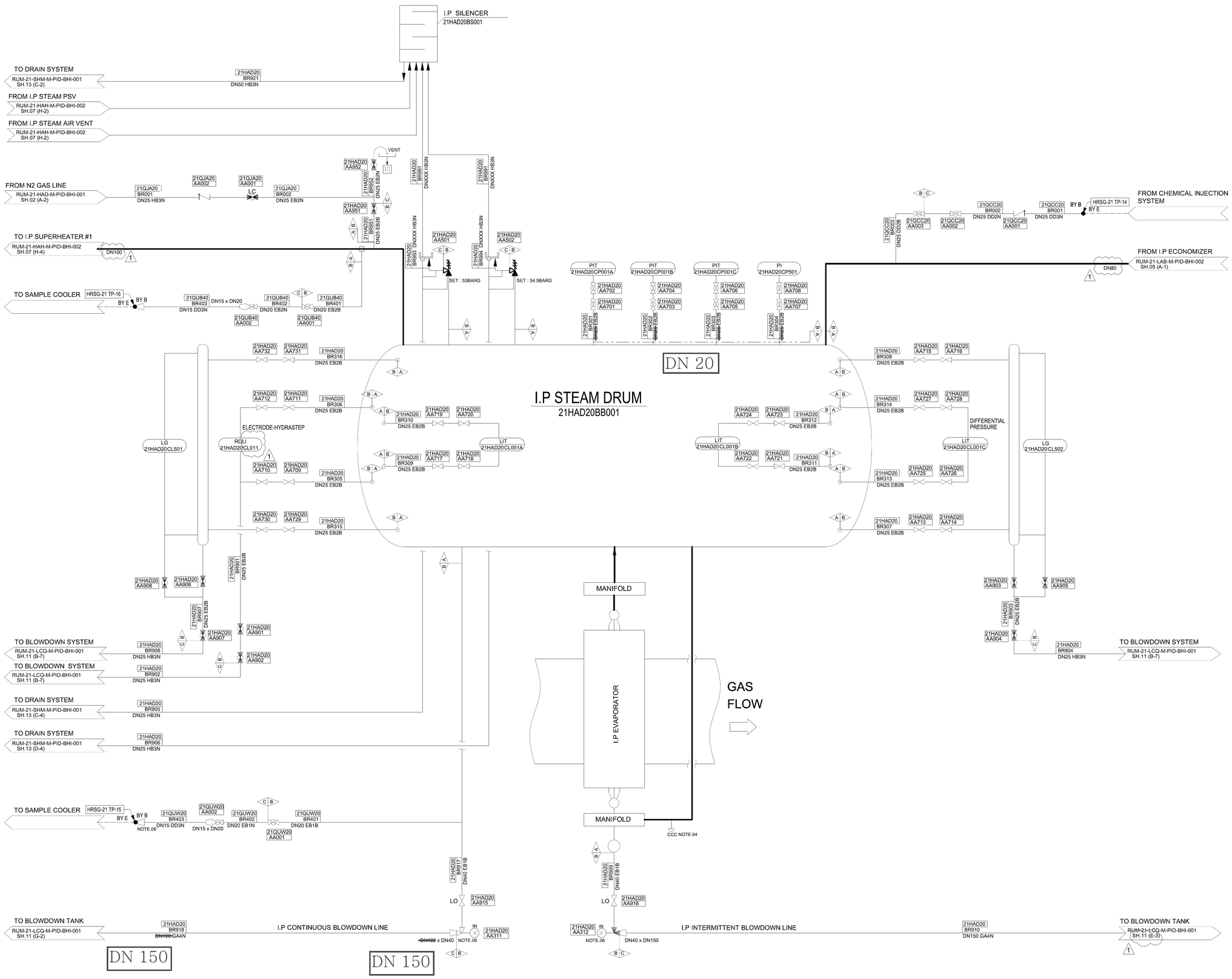

GENERAL NOTES

NOTE :

01. THE PLANT CODE ON DRAWING SHOW "21" FOR FIRST HRSG BLOCK 2x2x1. THERFORE. CONSIDER "22" FOR SECOND HRSG BLOCK 2X2X1.

02. SCOPE

BY B BY E

B : BHI
E : EPC

03. CODE LIMIT PIPING

A : BOILER PROPER
B : BEP
C : NBEP

04. CCC : CHEMICAL CLEANING CONNECTION

05. ☐ : STEAM SAMPLING NOZZLE

06. LOCATE HRSG DRUM INTERMITTENT AND CONTINUOUS BLOWDOWN AS CLOSE AS PRACTICAL TO BLOWDOWN TANK

07. X : CONNECTION FOR VENT FUNNEL DRAIN (REFER TO SH.13)

08. : LOCAL MAINTENANCE DRAIN FOR VISUAL CHECK

REFERENCE DRAWINGS

REV.	DATE	DESCRIPTION	DESIGNED	CHECKED	APPROVED
1	14.03.2025	FOR APPROVAL	K.J.LEE	W.J.CHO	S.H.YOO
0	24.01.2025	FOR APPROVAL	K.J.LEE	W.J.CHO	S.H.YOO

OFFTAKER: المشتري الرئيس PRINCIPAL BUYER

DEVELOPERS: TAQA Jera Energy for a New Era Al Borouj Capital

EPC CONTRACTOR: 哈尔滨电气国际工程有限责任公司 HARBIN ELECTRIC INTERNATIONAL COMPANY LIMITED; 中铁四局集团有限公司 CHINA TIESIJU CIVIL ENGINEERING GROUP CO., LTD.

DESIGNER: IDOM; CNBCC NEPDI

PROJECT: **RUMAH 2 IPP**

STATUS: FOR REVIEW ☐ FOR APPROVAL ☐ APPROVED FOR CONSTRUCTION ☐ AS BUILT ☐

SCALE: -

DESIGNED BY:	K.J.LEE	
CHECKED BY:	W.J.CHO	
APPROVED BY:	S.H.YOO	
DATE:	24.01.2025	

DOCUMENT OWNER: BHI.CO.,LTD.

TITLE: P&ID FOR I.P STEAM DRUM SYSTEM

CONTRACT No: -

SIZE: A0

PAGE No: 06 OF 15

DRAWING No.: RUM-21-HAD-M-PID-BHI-002

REV.: 1

DIN A-0 SIZE (1189x841)

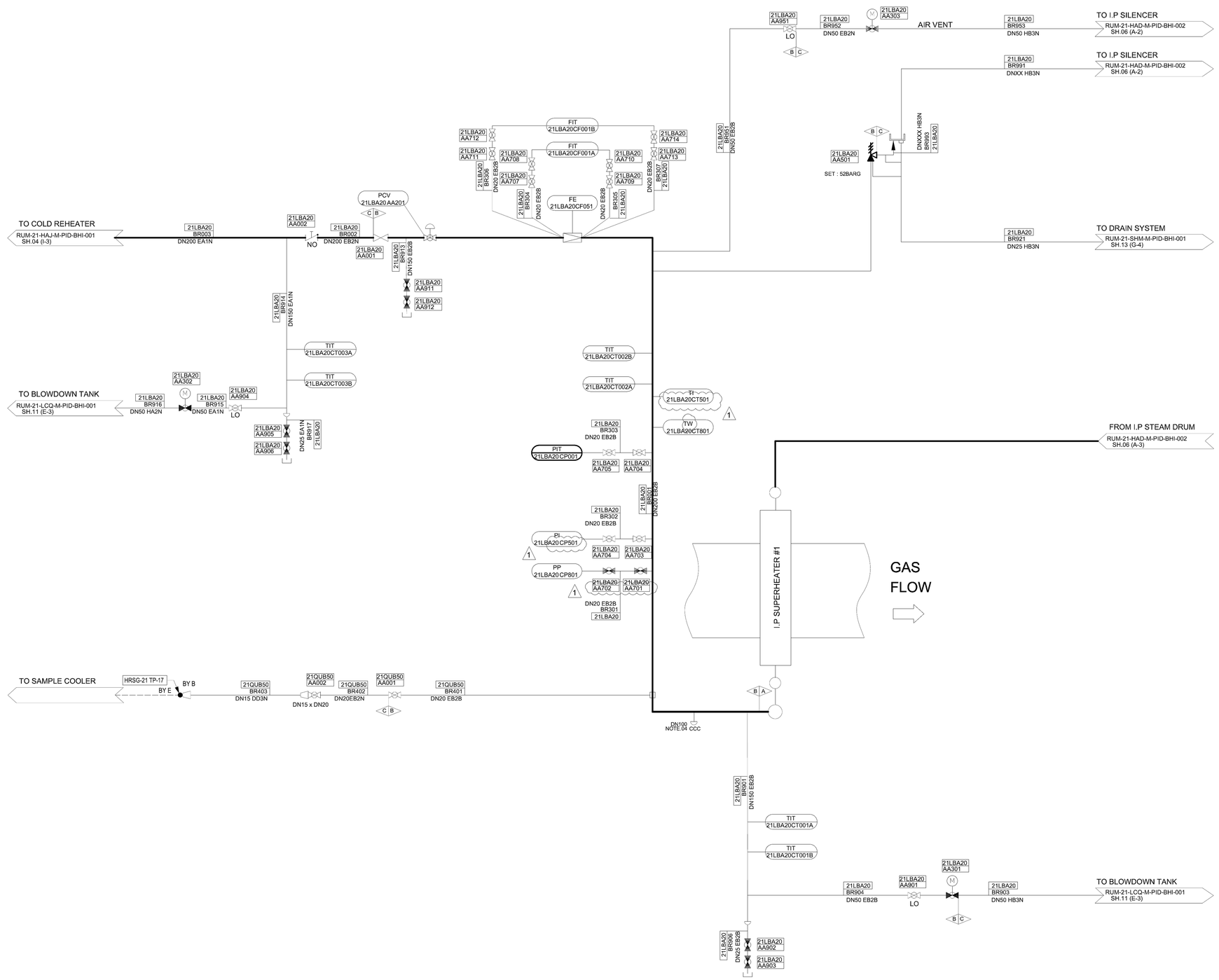

GENERAL NOTES

NOTE :

01. THE PLANT CODE ON DRAWING SHOW "21" FOR FIRST HRSG BLOCK 2x2x1. THERFORE. CONSIDER "22" FOR SECOND HRSG BLOCK 2X2X1.

02. SCOPE

BY B BY E

B : BHI
E : EPC

03. CODE LIMIT PIPING

A : BOILER PROPER
B : BEP
C : NBEP

04. CCC : CHEMICAL CLEANING CONNECTION

05. : LOCAL MAINTENANCE DRAIN FOR VISUAL CHECK

REFERENCE DRAWINGS

REV	DATE	DESCRIPTION	DESIGNED	CHECKED	APPROVED
1	14.03.2025	FOR APPROVAL	K.J.LEE	W.J.CHOI	S.H.YOO
0	24.01.2025	FOR APPROVAL	K.J.LEE	W.J.CHOI	S.H.YOO

OFFTAKER:

PRINCIPAL BUYER

DEVELOPERS:

TAQA jera Al Borouj Capital

EPC CONTRACTOR:

哈尔滨电气国际工程有限责任公司 HARBIN ELECTRIC INTERNATIONAL COMPANY LIMITED
中铁四局集团有限公司 中国中铁 CHINA TIESUE CIVIL ENGINEERING GROUP CO., LTD.

DESIGNER:

IDOM CNECC NEPDI

PROJECT:

RUMAH 2 IPP

STATUS: FOR REVIEW ☐ FOR APPROVAL ☒ APPROVED FOR CONSTRUCTION ☐ AS BUILT ☐

SCALE: -

DESIGNED BY:	K.J.LEE	
CHECKED BY:	W.J.CHOI	
APPROVED BY:	S.H.YOO	
DATE:	24.01.2025	

DOCUMENT OWNER: BHI.CO.,LTD.

TITLE: P&ID FOR I.P SUPERHEATER SYSTEM

CONTRACT No. -

SIZE: A0

PAGE No. 07 OF 15

DRAWING No. RUM-21-HAH-M-PID-BHI-002

REV. 1

DIN A-0 SIZE (1189x841)

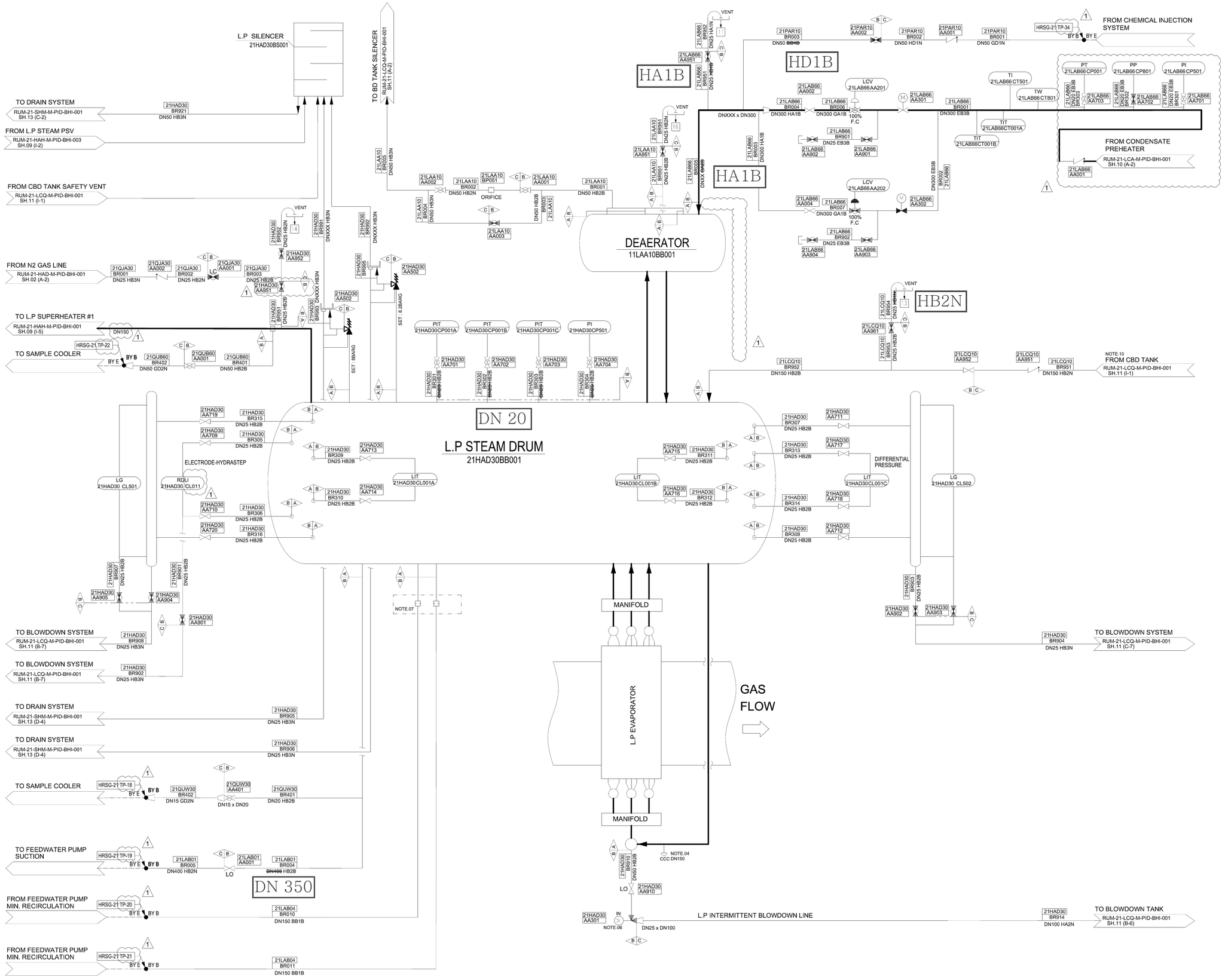

GENERAL NOTES

NOTE :

THE PLANT CODE ON DRAWING SHOW "21" FOR FIRST HRSG BLOCK 2x2x1. THERFORE. CONSIDER "22" FOR SECOND HRSG BLOCK 2X2X1.

02. SCOPE

BY B BY E — B : BHI, E : EPC

03. CODE LIMIT PIPING
A : BOILER PROPER
B : BEP
C : NBEP

04. CCC : CHEMICAL CLEANING CONNECTION

05. : STEAM SAMPLING NOZZLE

06. LOCATE HRSG DRUM INTERMITTENT AND CONTINUOUS BLOWDOWN AS CLOSE AS PRACTICAL TO BLOWDOWN TANK

07. THESE RESTRICT ORIFICES WILL BE SUPPLIED BY FEED WATER PUMP VENDOR ALSO, THEY SHALL BE LOCATED AS CLOSE AS POSSIBLE TO LP DRUM.

08. : CONNECTION FOR VENT FUNNEL DRAIN (REFER TO SH.13)

09. : LOCAL MAINTENANCE DRAIN FOR VISUAL CHECK

10. IT IS RECOMMENDED THAT VALVES TO BE LOCATED TO HIGHER POSITION THAN THE LP DRUM NOZZLE TO AVOID CONDENSATE ACCUMULATION.

REFERENCE DRAWINGS

REV.	DATE	DESCRIPTION	DESIGNED	CHECKED	APPROVED
1	14.03.2025	FOR APPROVAL	K.J.LEE	W.J.CHO	S.H.YOO
0	24.01.2025	FOR APPROVAL	K.J.LEE	W.J.CHO	S.H.YOO

OFFTAKER: المشتري الرئيسي PRINCIPAL BUYER

DEVELOPERS: TAQA JERA Al Bowsher Capital

EPC CONTRACTOR: 哈尔滨电气国际工程有限责任公司 HARBIN ELECTRIC INTERNATIONAL COMPANY LIMITED; 中铁四局集团有限公司 CHINA TIESIU CIVIL ENGINEERING GROUP CO., LTD.

DESIGNER: IDOM; CNECC NEPDI

PROJECT: **RUMAH 2 IPP**

STATUS: FOR REVIEW ☐ FOR APPROVAL ☐ APPROVED FOR CONSTRUCTION ☐ AS BUILT ☐

SCALE: -

DESIGNED BY:	K.J.LEE	
CHECKED BY:	W.J.CHO	
APPROVED BY:	S.H.YOO	
DATE:	24.01.2025	

DOCUMENT OWNER: BHI.CO.,LTD.

TITLE: P&ID FOR L.P DRUM SYSTEM

CONTRACT No. -	SIZE: A0
PAGE No.	08 OF 15
DRAWING No. RUM-21-HAD-M-PID-BHI-003	REV. 1

DIN A-0 SIZE (1189x841)

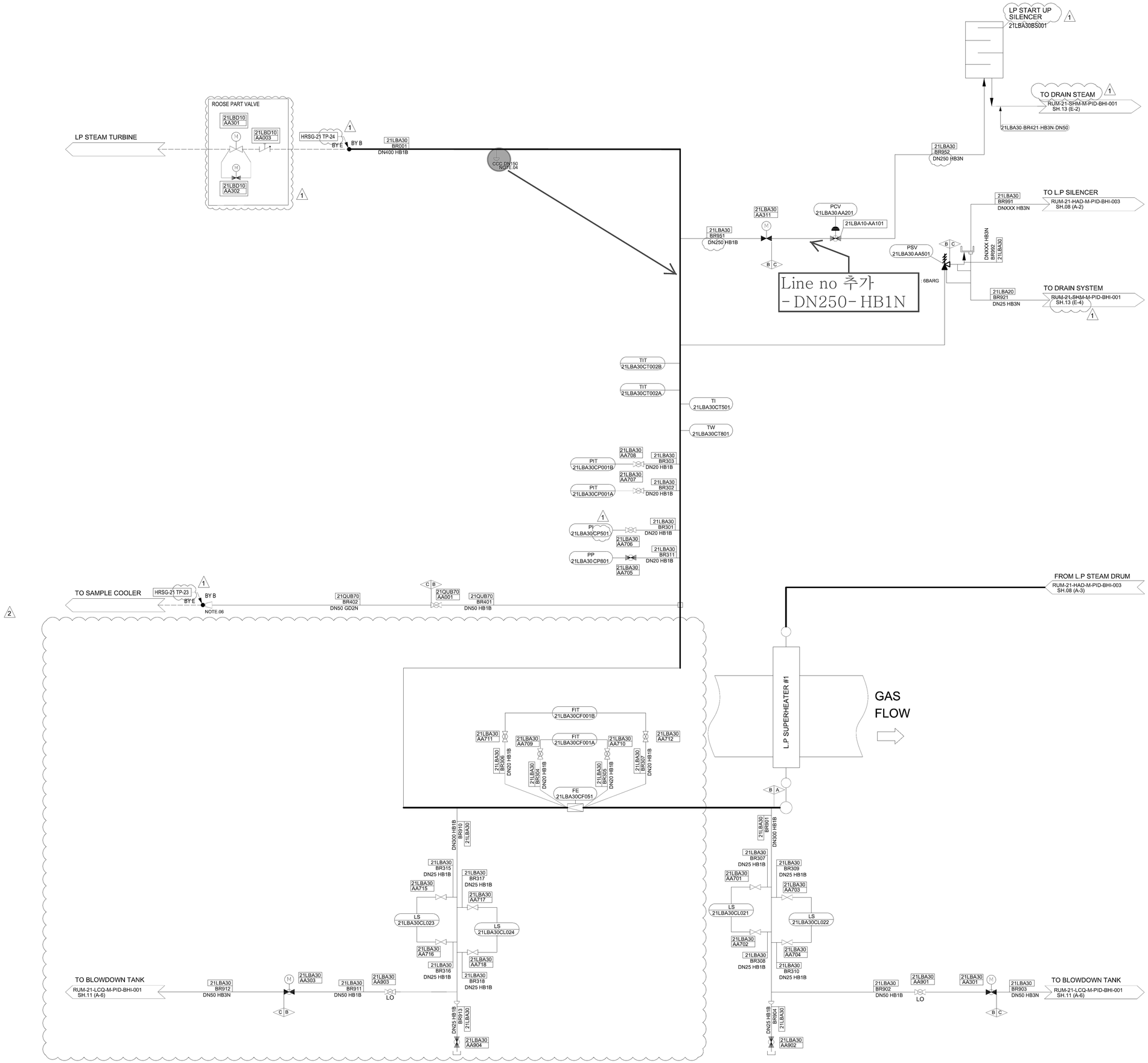

GENERAL NOTES

NOTE :

01. THE PLANT CODE ON DRAWING SHOW "21" FOR FIRST HRSG BLOCK 2x2x1. THERFORE. CONSIDER "22" FOR SECOND HRSG BLOCK 2X2X1.

02. SCOPE

BY B	BY E	
		B : BHI E : EPC

03. CODE LIMIT PIPING

A : BOILER PROPER
B : BEP
C : NBEP

04. CCC : CHEMICAL CLEANING CONNECTION

05. : LOCAL MAINTENANCE DRAIN FOR VISUAL CHECK

06. IT SHALL BE COMPATIBLE FOR TUBE CONNECTION. (BOP TUBE SIZE : 15.88mm (⅝"))

REFERENCE DRAWINGS

REV.	DATE	DESCRIPTION	DESIGNED	CHECKED	APPROVED
1	14.03.2025	FOR APPROVAL	K.J.LEE	W.J.CHOI	S.H.YOO
0	24.01.2025	FOR APPROVAL	K.J.LEE	W.J.CHOI	S.H.YOO

OFFTAKER: PRINCIPAL BUYER

DEVELOPERS: TAQA JERA Al Bawaniyah Capital

EPC CONTRACTOR: HARBIN ELECTRIC INTERNATIONAL COMPANY LIMITED; CHINA TIESIJU CIVIL ENGINEERING GROUP CO., LTD.

DESIGNER: IDOM; CINCE NEPDI

PROJECT: **RUMAH 2 IPP**

STATUS: FOR REVIEW ☐ FOR APPROVAL ☐ APPROVED FOR CONSTRUCTION ☐ AS BUILT ☐

SCALE: -

DESIGNED BY:	K.J.LEE	
CHECKED BY:	W.J.CHOI	
APPROVED BY:	S.H.YOO	
DATE:	24.01.2025	

DOCUMENT OWNER: BHI.CO.,LTD.

TITLE: P&ID FOR L.P SUPERHEATER SYSTEM

CONTRACT No: -

SIZE: A0

PAGE No: 09 OF 15

DRAWING No: RUM-21-HAH-M-PID-BHI-003

REV.: 1

DIN A-0 SIZE (1189x841)

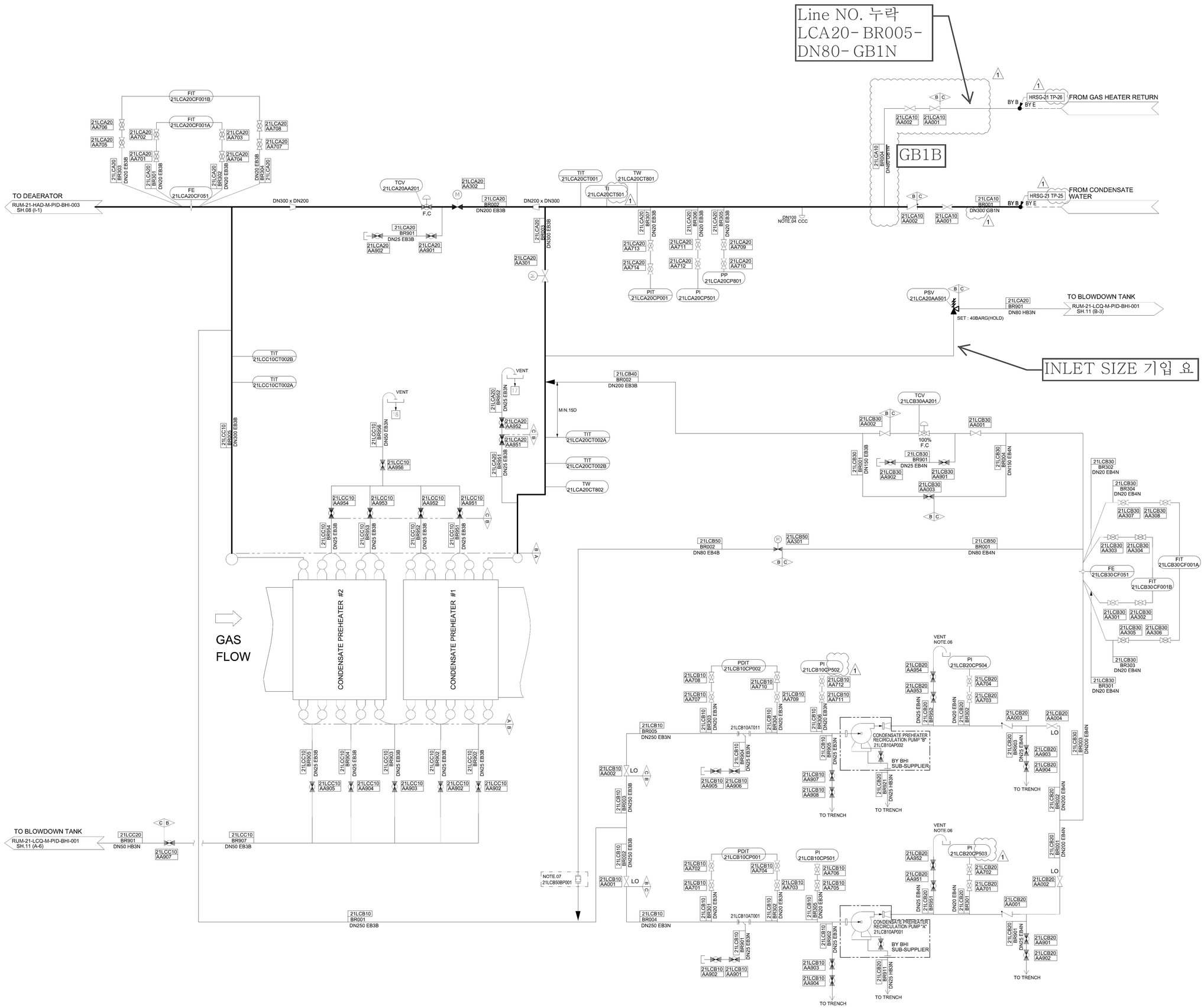

GENERAL NOTES

NOTE :

01. THE PLANT CODE ON DRAWING SHOW "21" FOR FIRST HRSG BLOCK 2x2x1. THERFORE. CONSIDER "22" FOR SECOND HRSG BLOCK 2X2X1.

02. SCOPE

BY B BY E — B : BHI, E : EPC

03. CODE LIMIT PIPING
A : BOILER PROPER
B : BEP
C : NBEP

04. CCC : CHEMICAL CLEANING CONNECTION

05. X : CONNECTION FOR VENT FUNNEL DRAIN (REFER TO SH.13)

06. THE HEIGHTEST POINT VENT (IT WILL BE CLOSED WITH TREADED CAP)

07. THE RESTRICT ORIFICE WILL BE SUPPLIED BY SUB-SUPPLIER.

08. : LOCAL MAINTENANCE DRAIN FOR VISUAL CHECK

REFERENCE DRAWINGS

REV	DATE	DESCRIPTION	DESIGNED	CHECKED	APPROVED
1	14.03.2025	FOR APPROVAL	K.J.LEE	W.J.CHO	S.H.YOO
0	24.01.2025	FOR APPROVAL	K.J.LEE	W.J.CHO	S.H.YOO

OFFTAKER: PRINCIPAL BUYER

DEVELOPERS: TAQA, Jera, Al Borouj Capital

EPC CONTRACTOR: 哈尔滨电气国际工程有限责任公司 HARBIN ELECTRIC INTERNATIONAL COMPANY LIMITED; 中铁四局集团有限公司 CHINA TIESIJU CIVIL ENGINEERING GROUP CO., LTD.

DESIGNER: IDOM, GINGE NEPDI

PROJECT: **RUMAH 2 IPP**

STATUS: FOR REVIEW ☐ FOR APPROVAL ☐ APPROVED FOR CONSTRUCTION ☐ AS BUILT ☐

SCALE: -

DESIGNED BY:	K.J.LEE
CHECKED BY:	W.J.CHO
APPROVED BY:	S.H.YOO
DATE:	24.01.2025

DOCUMENT OWNER: BHI.CO.,LTD.

TITLE: P&ID FOR CONDENSATE PREHEATER SYSTEM

CONTRACT No. - | SIZE: A0

PAGE No. 10 OF 15

DRAWING No. RUM-21-LCA-M-PID-BHI-001 | REV. 1

DIN A-0 SIZE (1189x841)

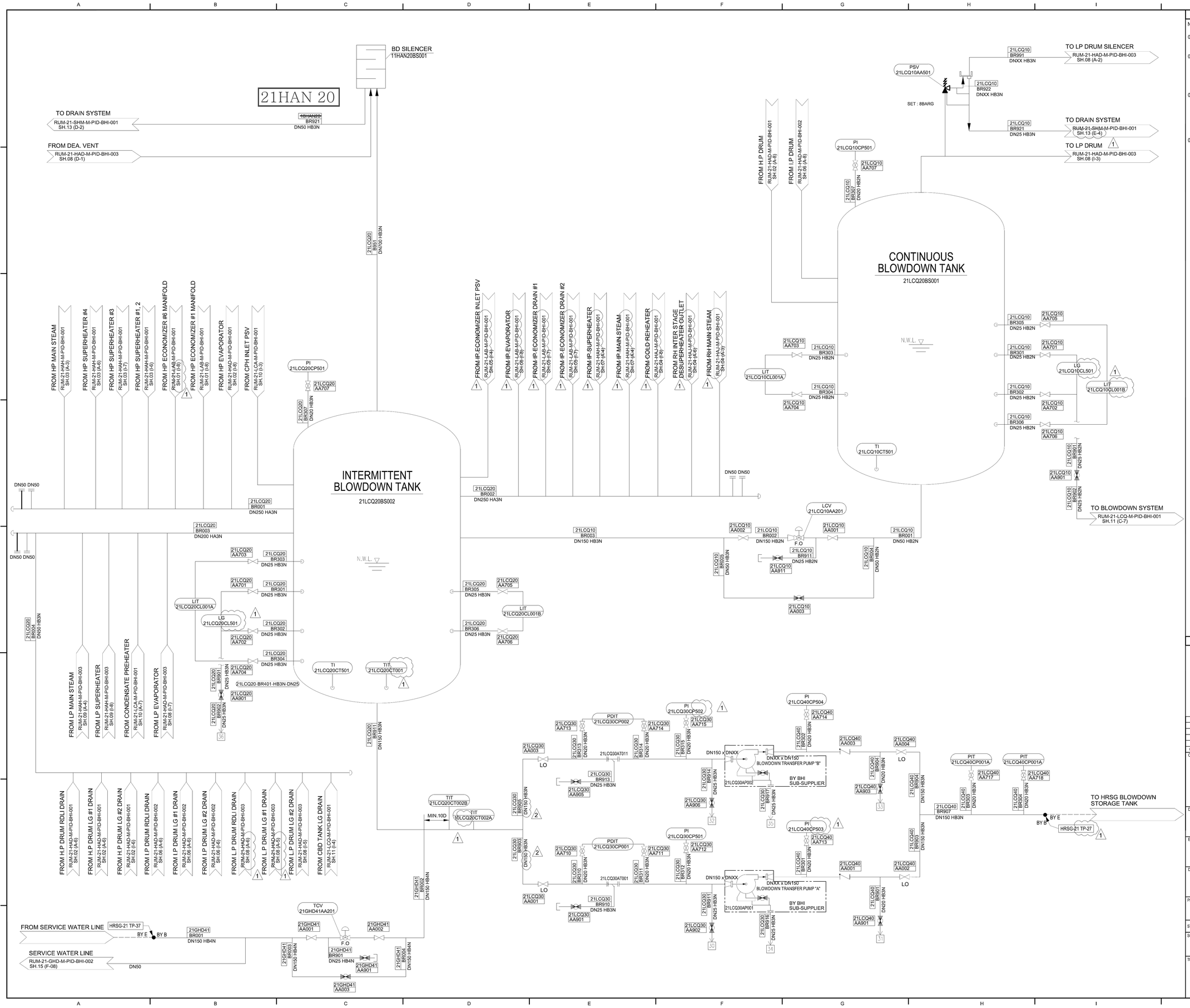

GENERAL NOTES

NOTE :

01. THE PLANT CODE ON DRAWING SHOW "21" FOR FIRST HRSG BLOCK 2x2x1. THERFORE. CONSIDER "22" FOR SECOND HRSG BLOCK 2X2X1.

02. SCOPE

BY B BY E — B : BHI, E : EPC

03. CODE LIMIT PIPING

A : BOILER PROPER
B : BEP
C : NBEP

04. : LOCAL MAINTENANCE DRAIN FOR VISUAL CHECK

REFERENCE DRAWINGS

REV.	DATE	DESCRIPTION	DESIGNED	CHECKED	APPROVED
1	14.03.2025	FOR APPROVAL	K.J.LEE	W.J.CHOI	S.H.YOO
0	24.01.2025	FOR APPROVAL	K.J.LEE	W.J.CHOI	S.H.YOO

OFFTAKER: PRINCIPAL BUYER

DEVELOPERS: TAQA, jera, Al Borouge Capital

EPC CONTRACTOR: HARBIN ELECTRIC INTERNATIONAL COMPANY LIMITED; CHINA TIESIJU CIVIL ENGINEERING GROUP CO., LTD.

DESIGNER: IDOM, GINGE NEPDI

PROJECT: **RUMAH 2 IPP**

STATUS: FOR REVIEW ☐ FOR APPROVAL ☐ APPROVED FOR CONSTRUCTION ☐ AS BUILT ☐

SCALE: -

DESIGNED BY:	K.J.LEE	
CHECKED BY:	W.J.CHOI	
APPROVED BY:	S.H.YOO	
DATE:	24.01.2025	

DOCUMENT OWNER: BHI.CO.,LTD.

TITLE: P&D FOR BLOWDOWN TANK SYSTEM

CONTRACT No.	-
SIZE	A0
PAGE No.	11 OF 15
DRAWING No.	RUM-21-LCQ-M-PID-BHI-001
REV.	1

DIN A-0 SIZE (1189x841)

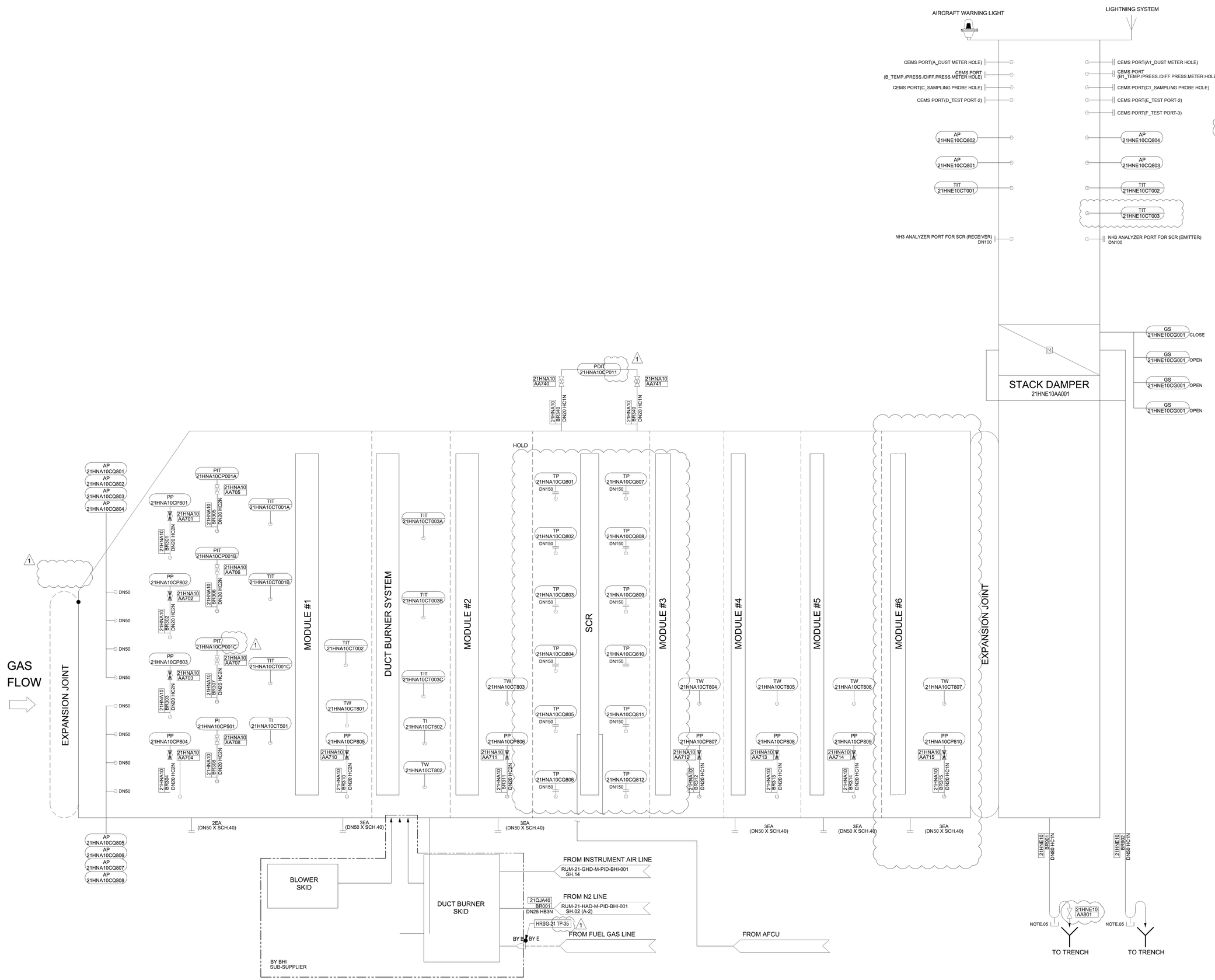

GENERAL NOTES

NOTE :

01. THE PLANT CODE ON DRAWING SHOW "21" FOR FIRST HRSG BLOCK 2x2x1. THERFORE. CONSIDER "22" FOR SECOND HRSG BLOCK 2X2X1.

02. SCOPE

BY B	BY E	
		B : BHI
		E : EPC

03. CODE LIMIT PIPING

A : BOILER PROPER
B : BEP
C : NBEP

04. EA : QUANTITY OF DRAIN POINT

05. PROVISION FOR INITIAL WATER FILLING

REFERENCE DRAWINGS

REV.	DATE	DESCRIPTION	DESIGNED	CHECKED	APPROVED
1	14.03.2025	FOR APPROVAL	K.J.LEE	W.J.CHOI	S.H.YOO
0	24.01.2025	FOR APPROVAL	K.J.LEE	W.J.CHOI	S.H.YOO

OFFTAKER:

PRINCIPAL BUYER

DEVELOPERS:

TAQA Jera Energy for a New Era Al Borouj Capital

EPC CONTRACTOR:

哈尔滨电气国际工程有限责任公司 HARBIN ELECTRIC INTERNATIONAL COMPANY LIMITED

中铁四局集团有限公司 CHINA TIESIJU CIVIL ENGINEERING GROUP CO., LTD.

DESIGNER:

IDOM CNREC NEPDI

PROJECT:

RUMAH 2 IPP

STATUS: FOR REVIEW ☐ FOR APPROVAL ☐ APPROVED FOR CONSTRUCTION ☐ AS BUILT ☐

SCALE: -

DESIGNED BY:	K.J.LEE
CHECKED BY:	W.J.CHOI
APPROVED BY:	S.H.YOO
DATE:	24.01.2025

DOCUMENT OWNER: BHI.CO.,LTD.

TITLE: P&ID FOR CASING SYSTEM

CONTRACT No. -

SIZE: A0

PAGE No. 12 OF 15

DRAWING No. RUM-21-HNA-M-PID-BHI-001

REV. 1

DIN A-0 SIZE (1189x841)

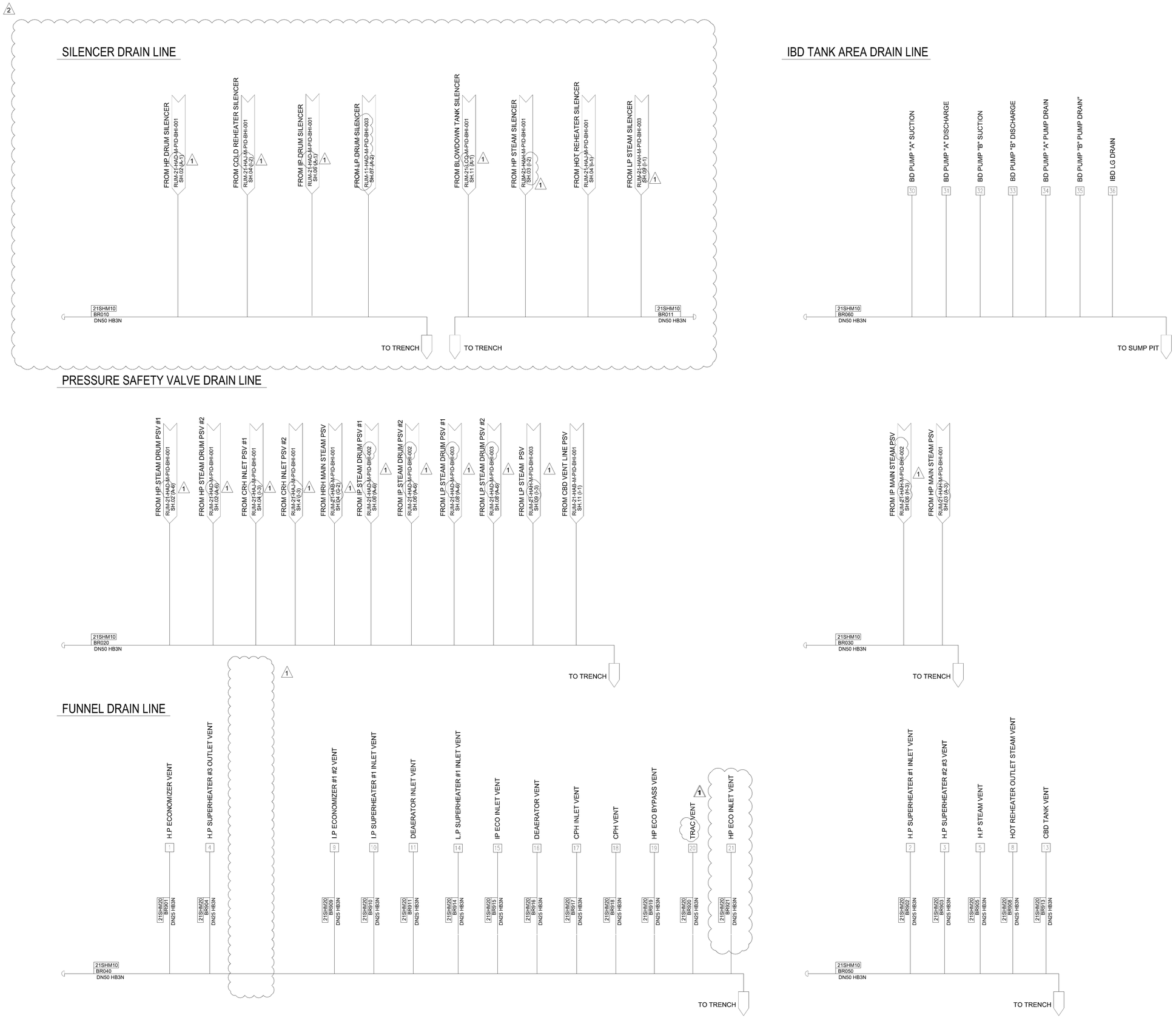

GENERAL NOTES

NOTE :

01. THE PLANT CODE ON DRAWING SHOW "21" FOR FIRST HRSG BLOCK 2x2x1. THERFORE. CONSIDER "22" FOR SECOND HRSG BLOCK 2X2X1.

02. SCOPE

BY B	BY E	
		B : BHI
		E : EPC

REFERENCE DRAWINGS

REV.	DATE	DESCRIPTION	DESIGNED	CHECKED	APPROVED
1	14.03.2025	FOR APPROVAL	K.J.LEE	W.J.CHOI	S.H.YOO
0	24.01.2025	FOR APPROVAL	K.J.LEE	W.J.CHOI	S.H.YOO

OFFTAKER: PRINCIPAL BUYER

DEVELOPERS: TAQA, jera, Al Bunaan Capital

EPC CONTRACTOR: 哈尔滨电气国际工程有限责任公司 HARBIN ELECTRIC INTERNATIONAL COMPANY LIMITED; 中铁四局集团有限公司 CHINA TIESIJU CIVIL ENGINEERING GROUP CO., LTD.

DESIGNER: IDOM, CNECC NEPDI

PROJECT: **RUMAH 2 IPP**

STATUS: FOR REVIEW ☐ FOR APPROVAL ☒ APPROVED FOR CONSTRUCTION ☐ AS BUILT ☐

SCALE: -

DESIGNED BY:	K.J.LEE	
CHECKED BY:	W.J.CHOI	
APPROVED BY:	S.H.YOO	
DATE:	24.01.2025	

DOCUMENT OWNER: BHI.CO.,LTD.

TITLE: P&ID FOR DRAIN SYSTEM

CONTRACT No: -

SIZE: A0

PAGE No.: 13 OF 15

DRAWING No.: RUM-21-SHM-M-PID-BHI-001

REV.: 1

DIN A-0 SIZE (1189x841)

CLOSED COOLING WATER SYSTEM

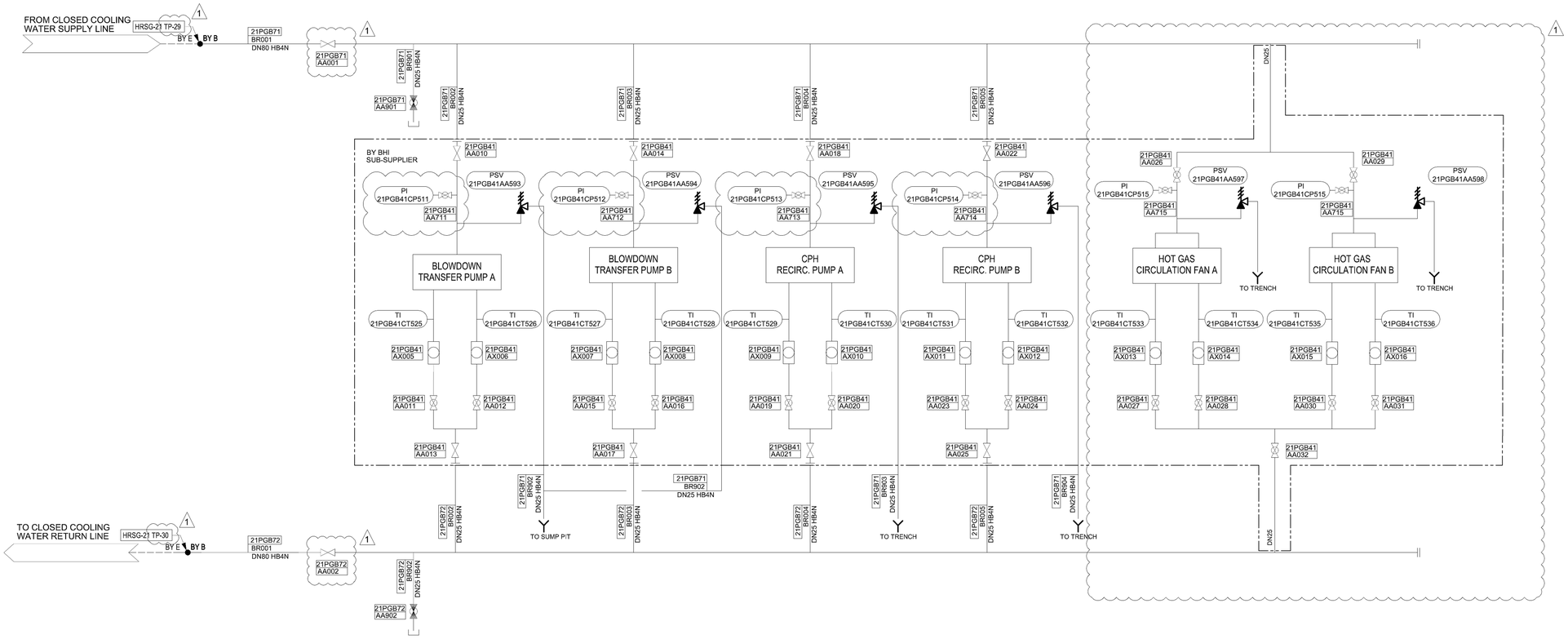

INSTRUMENT AIR SYSTEM

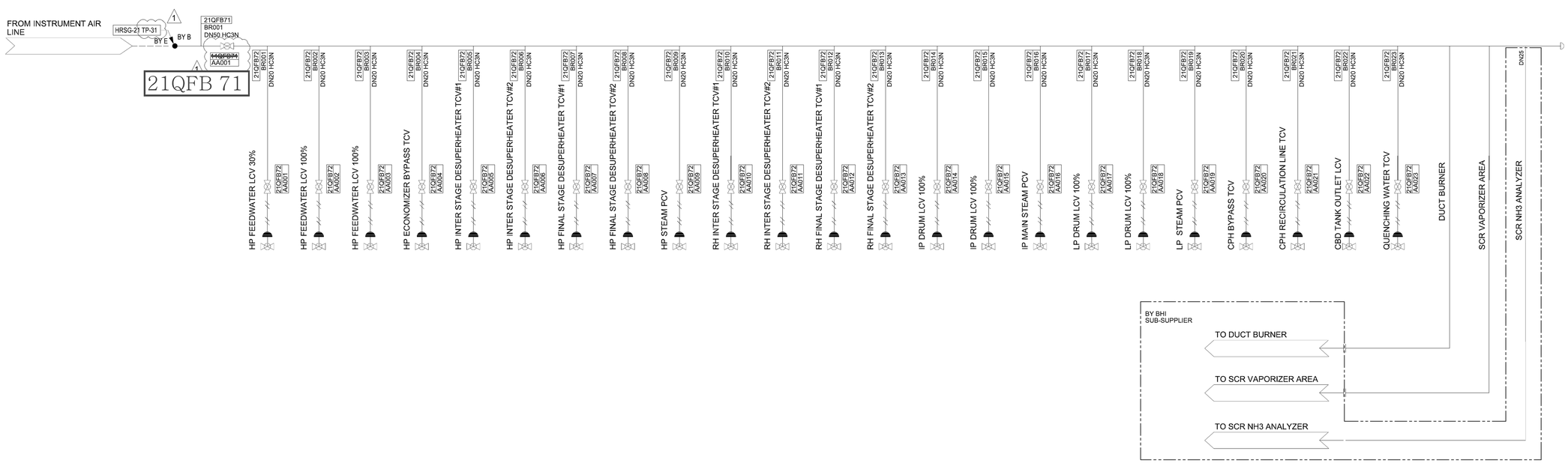

GENERAL NOTES

NOTE :

01. THE PLANT CODE ON DRAWING SHOW "21" FOR FIRST HRSG BLOCK 2x2x1. THERFORE. CONSIDER "22" FOR SECOND HRSG BLOCK 2X2X1.

02. SCOPE

BY B BY E — B : BHI, E : EPC

REFERENCE DRAWINGS

REV.	DATE	DESCRIPTION	DESIGNED	CHECKED	APPROVED
1	14.03.2025	FOR APPROVAL	K.J.LEE	W.J.CHO	S.H.YOO
0	24.01.2025	FOR APPROVAL	K.J.LEE	W.J.CHO	S.H.YOO

OFFTAKER: PRINCIPAL BUYER

DEVELOPERS: TAQA, jera, Al Bowsher Capital

EPC CONTRACTOR: 哈尔滨电气国际工程有限责任公司 HARBIN ELECTRIC INTERNATIONAL COMPANY LIMITED; 中铁四局集团有限公司 CHINA TIESIU CIVIL ENGINEERING GROUP CO., LTD.

DESIGNER: IDOM, CINEC NEPDI

PROJECT: **RUMAH 2 IPP**

STATUS: FOR REVIEW ☐ FOR APPROVAL ☐ APPROVED FOR CONSTRUCTION ☐ AS BUILT ☐

SCALE: -

DESIGNED BY:	K.J.LEE
CHECKED BY:	W.J.CHO
APPROVED BY:	S.H.YOO
DATE:	24.01.2025

DOCUMENT OWNER: BHI.CO.,LTD.

TITLE: P&ID FOR UTILITY SYSTEM (1/2)

CONTRACT No. - | SIZE: A0

PAGE No. 14 OF 15

DRAWING No. RUM-21-GHD-M-PID-BHI-001 | REV. 1

DIN A-0 SIZE (1189x841)

SERVICE AIR SYSTEM

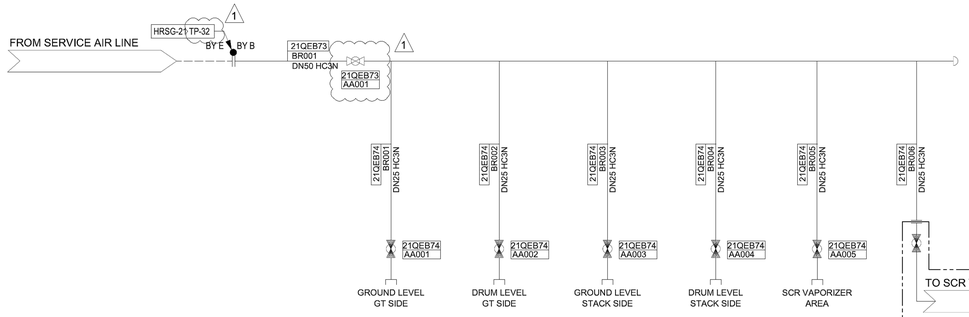

SERVICE WATER SYSTEM

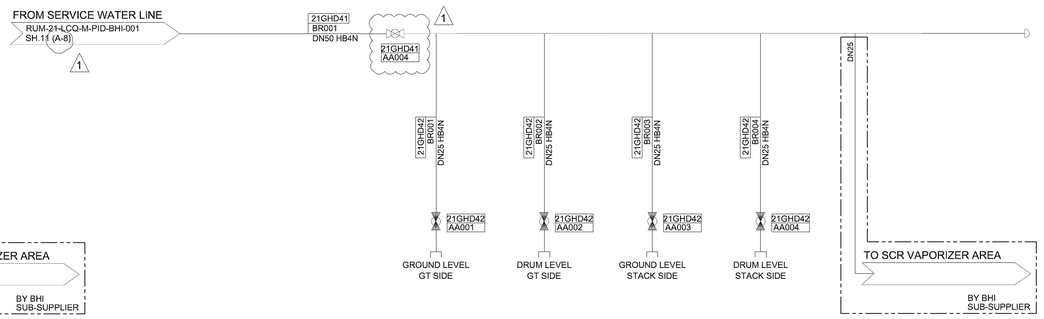

GENERAL NOTES

NOTE :

01. THE PLANT CODE ON DRAWING SHOW "21" FOR FIRST HRSG BLOCK 2x2x1. THERFORE, CONSIDER "22" FOR SECOND HRSG BLOCK 2X2X1.

02. SCOPE

BY B	BY E
	B : BHI
	E : EPC

REFERENCE DRAWINGS

REV.	DATE	DESCRIPTION	DESIGNED	CHECKED	APPROVED
1	14.03.2025	FOR APPROVAL	K.J.LEE	W.J.CHOI	S.H.YOO
0	24.01.2025	FOR APPROVAL	K.J.LEE	W.J.CHOI	S.H.YOO

OFFTAKER:

PRINCIPAL BUYER

DEVELOPERS:

TAQA jera Al Bowsher Capital

EPC CONTRACTOR:

哈尔滨电气国际工程有限责任公司 HARBIN ELECTRIC INTERNATIONAL COMPANY LIMITED

中铁四局集团有限公司 CHINA TIESIJU CIVIL ENGINEERING GROUP CO., LTD.

DESIGNER:

IDOM CNECC NEPDI

PROJECT:

RUMAH 2 IPP

STATUS: FOR REVIEW ☐ FOR APPROVAL ☐ APPROVED FOR CONSTRUCTION ☐ AS BUILT ☐

SCALE: -

DESIGNED BY:	K.J.LEE
CHECKED BY:	W.J.CHOI
APPROVED BY:	S.H.YOO
DATE:	24.01.2025

DOCUMENT OWNER: BHI.CO.,LTD.

TITLE: P&ID FOR UTILITY SYSTEM (2/2)

CONTRACT No. -	SIZE: A0
PAGE No.	15 OF 15
DRAWING No. RUM-21-GHD-M-PID-BHI-002	REV. 1

DIN A-0 SIZE (1189x841)