Tècniques i Eines Bioinformàtiques

Kmer Indexes

Santiago Marco-Sola (santiago.marco@upc.edu)

Màster en Enginyeria Informàtica, UPC
Departament of Computer Science
Facultat d'Informàtica de Barcelona (FIB), UPC

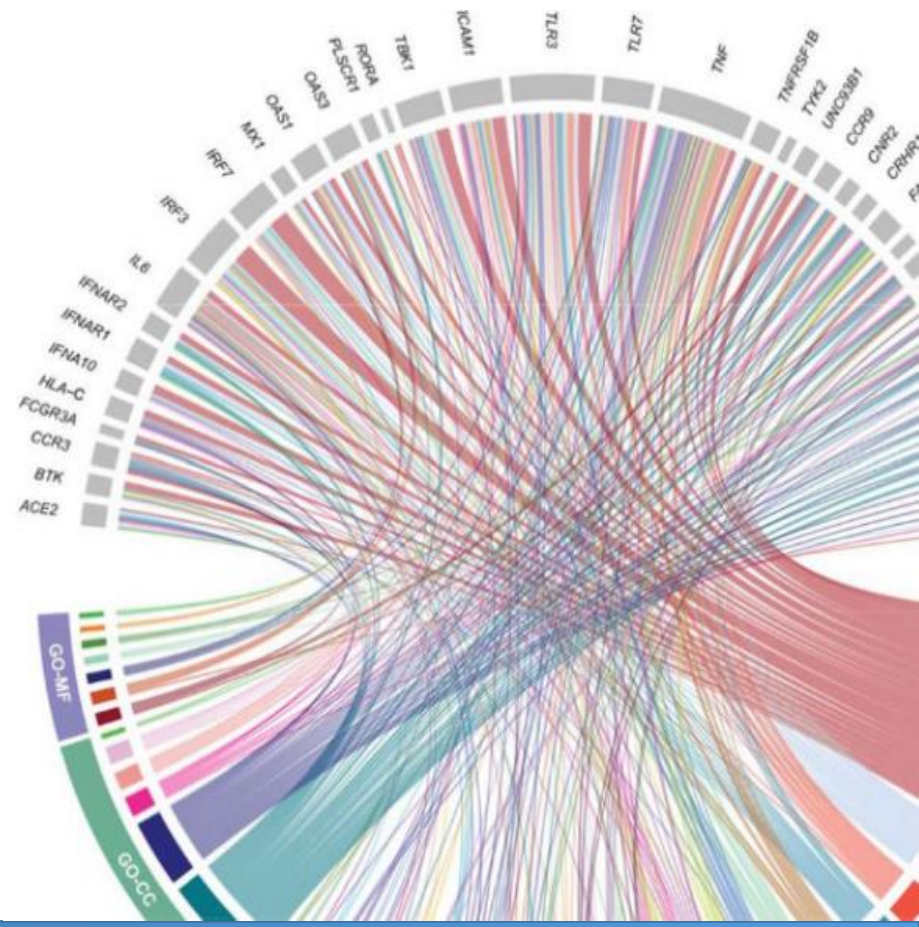

Acknowledgements

Many pictures and materials are taken from **Ben Langmead's course**.

Course heavily inspired in:

- **Genome-Scale Algorithm Design**. Veli Mäkinen, Djamal Belazzougui, Fabio Cunial, Alexandru I. Tomescu. Cambridge University Press.
- **Algorithms on Strings, Trees, and Sequences**. Dan Gusfield. Cambridge University Press.
- **An Introduction to Bioinformatics Algorithms.** Neil C. Jones, Pavel A. Pevzner. MIT Press.

1 Indexes for Genomics

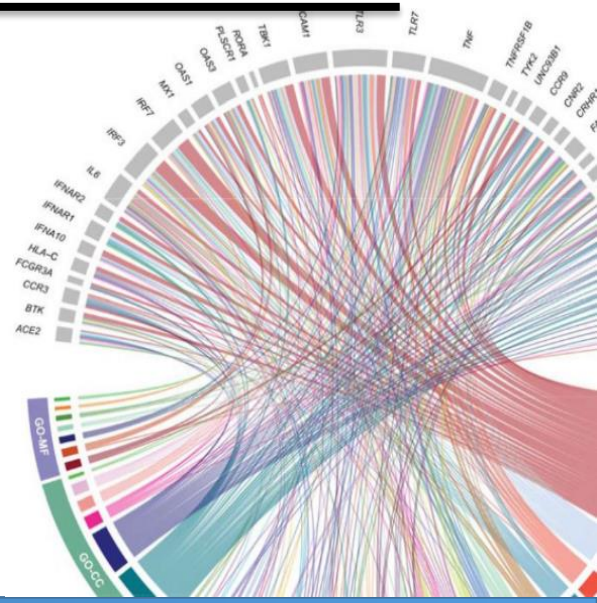

Preprocessing: Naïve algorithm

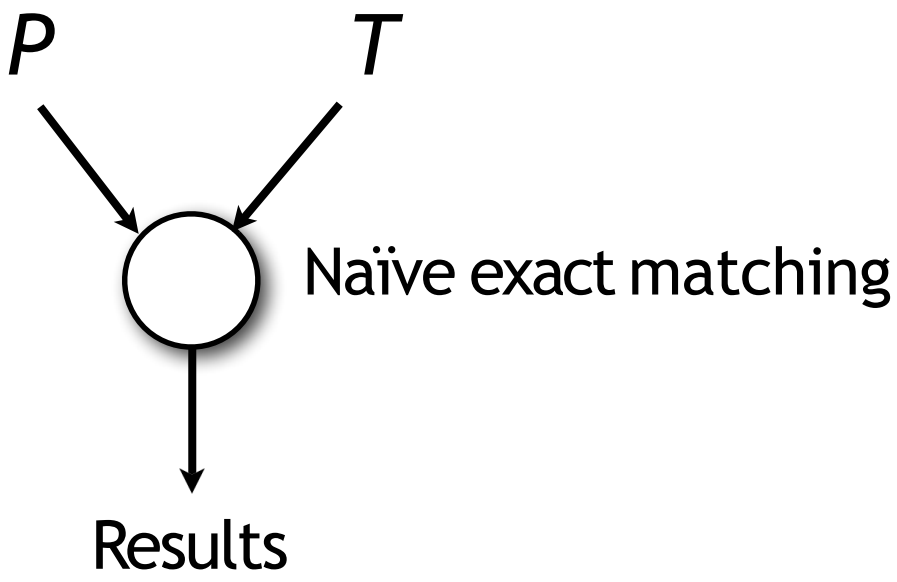

Preprocessing: Boyer-Moore

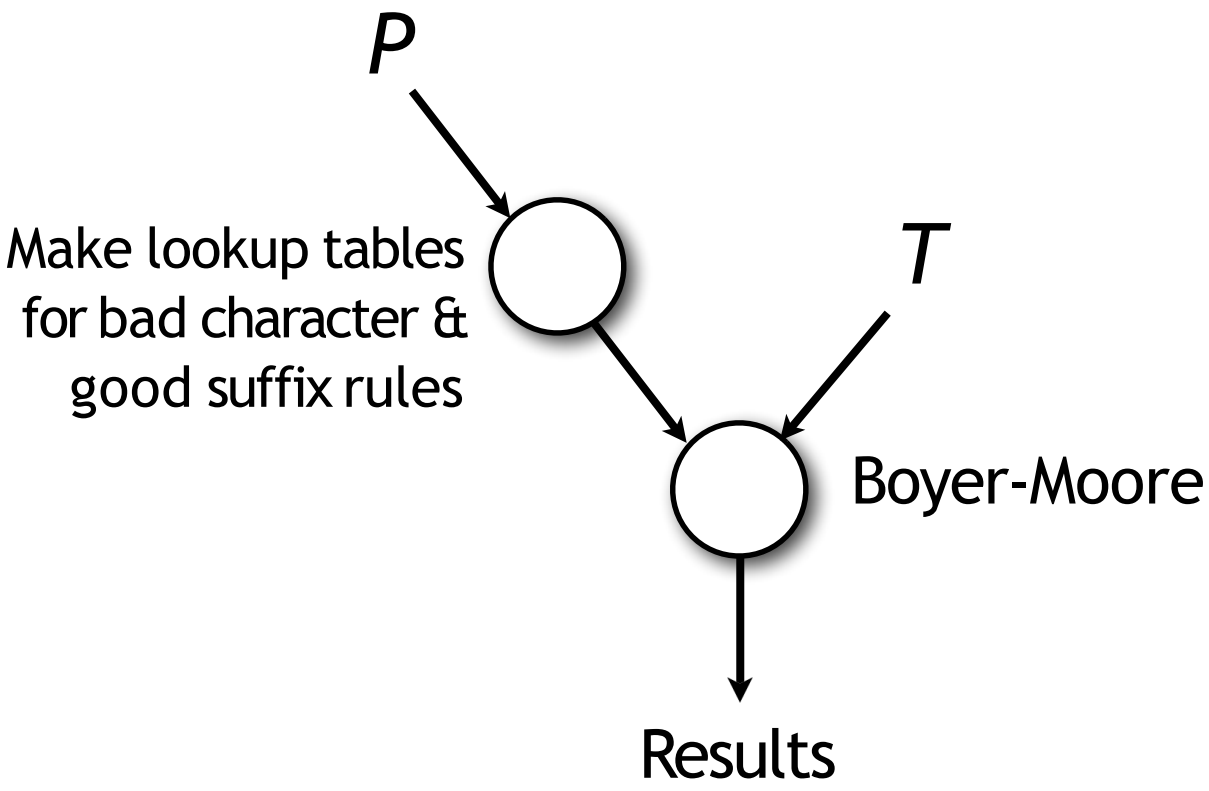

Preprocessing

Boyer-Moore preprocessed P

What about preprocessing T?

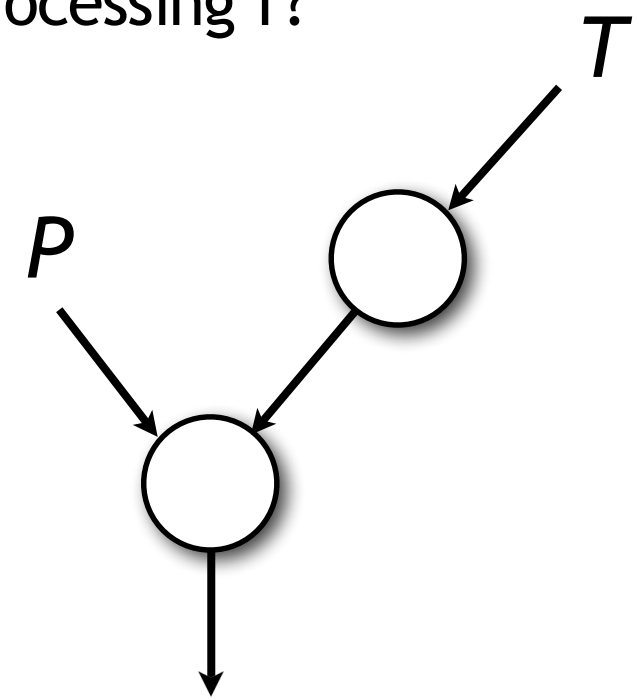

Preprocessing

Algorithm that preprocesses *T* is *offline*.
Otherwise, algorithm is *online*.

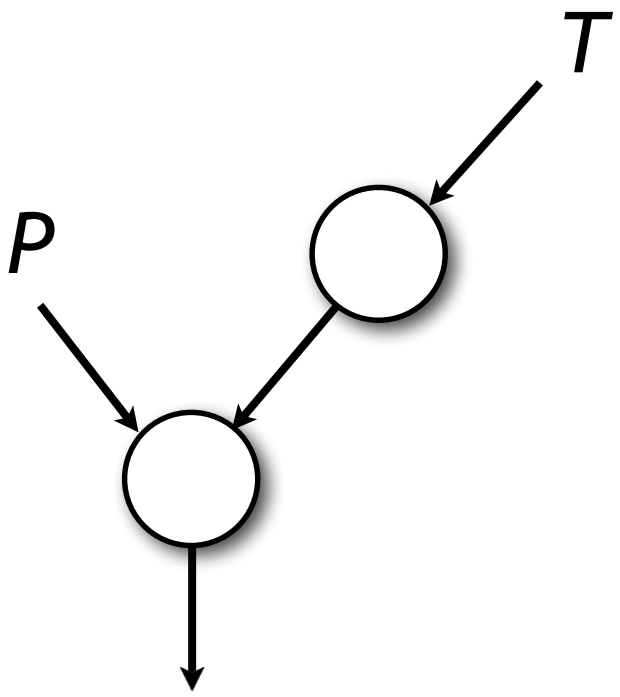

Online or offline?

- Naïve algorithm
- Boyer-Moore
- Web search engine
- Read alignment

Offline algorithms

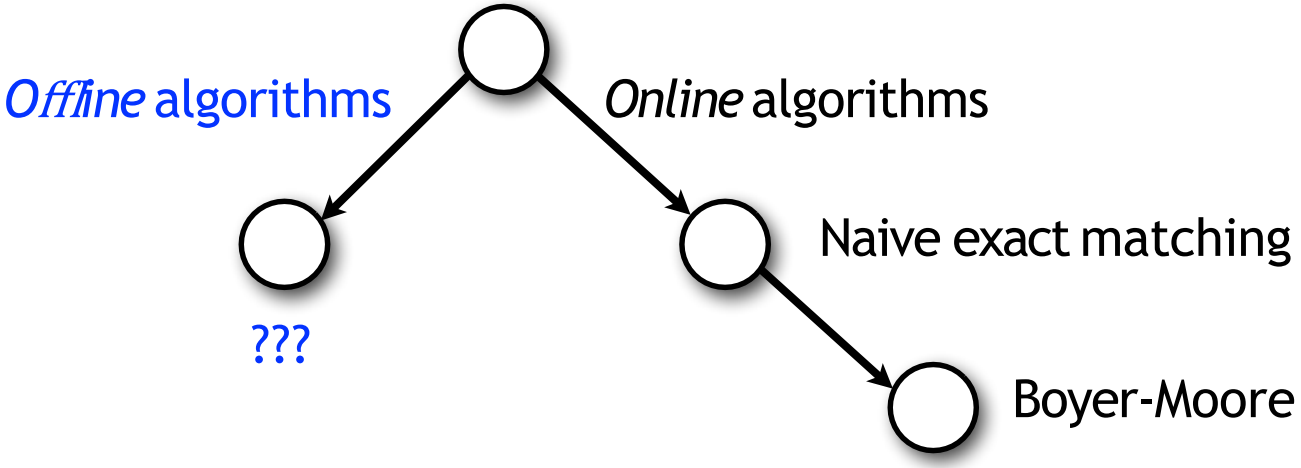

Still focusing on exact matching problem: find all places where pattern *P* exactly matches a substring of text *T*

Index

nest site hunting, 482–87
honeypot ants, *see Myrmecocystus*
hormones, 106–9
see also exocrine glands
house (nest site) hunting, 482–92
Hymenoptera (general), xvi
haplodiploid sex determination, 20–22
Hypoponera (ants), 194, 262, 324, 388

inclusive fitness, 20–23, 29–42
information measurement, 251–52
intercastes, 388–89
see also ergatogynes; ergatoid queens; gamergates
Iridomyrmex (ants), 266, 280, 288, 321
Isoptera, *see* termites

juvenile hormone, caste, 106–9, 372

kin recognition, 293–98
kin selection, 18–19, 23–24, 28–42, 299, 386

Macrotermes (termites), 59–60
male recognition, 298
mass communication, 62–63, 214–18
mating, multiple, 155
maze following, 119
Megalomyrmex (ants), 457
Megaponera (ants), *see Pachycondyla*
Melipona (stingless bees), 129
Melophorus (ants), repletes, 257
memory, 117–19, 213
Messor (harvester ants), 212, 232
mind, 117–19
Monomorium, 127, 212, 214, 216–17, 292
motor displays, 235–47
mound-building ants, 2
multilevel selection, 7, 7–13, 24–29
mutilation, ritual, 366–73
mutualism, *see* symbioses, ants
Myanmyrma (fossil ants), 318
Myopias (ants), 326

Key terms ordered alphabetically, with associated page #s

Index

Grocery store items grouped into aisles

Index

Indexes use *ordering* and *grouping* to make it easy to jump to relevant portions of the data

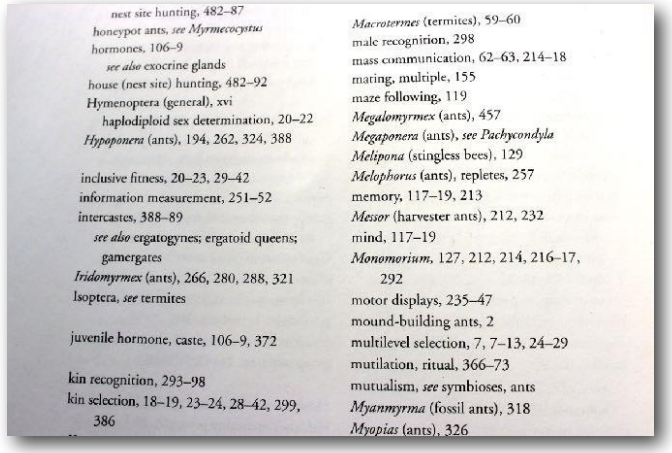

nest site hunting, 482–87
honeypot ants, *see Myrmecocystus*
hormones, 106–9
see also exocrine glands
house (nest site) hunting, 482–92
Hymenoptera (general), xvi
haplodiploid sex determination, 20–22
Hypoponera (ants), 194, 262, 324, 388

inclusive fitness, 20–23, 29–42
information measurement, 251–52
intercastes, 388–89
see also ergatogynes; ergatoid queens; gamergates
Iridomyrmex (ants), 266, 280, 288, 321
Isoptera, *see* termites

juvenile hormone, caste, 106–9, 372

kin recognition, 293–98
kin selection, 18–19, 23–24, 28–42, 299, 386

Macrotermes (termites), 59–60
male recognition, 298
mass communication, 62–63, 214–18
mating, multiple, 155
maze following, 119
Megalomyrmex (ants), 457
Megaponera (ants), *see Pachycondyla*
Melipona (stingless bees), 129
Melophorus (ants), repletes, 257
memory, 117–19, 213
Messor (harvester ants), 212, 232
mind, 117–19
Monomorium, 127, 212, 214, 216–17, 292
motor displays, 235–47
mound-building ants, 2
multilevel selection, 7, 7–13, 24–29
mutilation, ritual, 366–73
mutualism, *see* symbioses, ants
Myanmyrma (fossil ants), 318
Myopias (ants), 326

2 Multimap Index

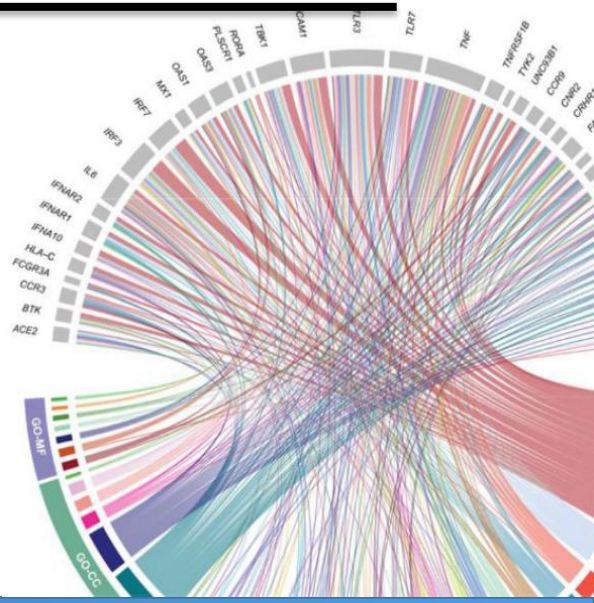

Indexing DNA

T: C G T G C G T G C T T

Indexing DNA

Index of T

CGTGC: 0

T: C G T G C G T G C T T

Indexing DNA

Index of T

```
CGTGC:  0
GTGCG:  1
```

T: C G T G C G T G C T T

Indexing DNA

Index of T

```
CGTGC:  0
GTGCG:  1
TGCGT:  2
```

T: C G T G C G T G C T T

Indexing DNA

Index of T

CGTGC:	0
GCGTG:	3
GTGCC:	1
TGCCT:	2

T: C G T G C G T G C T T

Indexing DNA

Index of T

CGTGC:	0,4
GCGTG:	3
GTGCC:	1
TGCCT:	2

T: C G T G C G T G C T T

Indexing DNA

Index of T

CGTGC:	0,4
GCGTG:	3
GTGCC:	1
GTGCT:	5
TGCCT:	2

T: C G T G C G T G C T T

Indexing DNA

Index of T

CGTGC:	0,4
GCGTG:	3
GTGCC:	1
GTGCT:	5
TGCCT:	2
TGCTT:	6

T: C G T G C G T G C T T

Indexing DNA

k-mer: substring of length k

Index of T	
CGTGC:	0,4
GCGTG:	3
GTGCC:	1
GTGCT:	5
TGCCT:	2
TGCTT:	6

5-mer index

T: C G T G C G T G C T T

Querying the index

Index of T

CGTGC:	0,4
GCGTG:	3
GTGCC:	1
GTGCT:	5
TGCCT:	2
TGCTT:	6

T: C G T G C G T G C T T

P: G C G T G C

Querying the index

Index of T

CGTGC:	0,4
GCGTG:	3
GTGCC:	1
GTGCT:	5
TGCCT:	2
TGCTT:	6

?

T: C G T G C G T G C T T

P: G C G T G C

Querying the index

Index of T

CGTGC:	0,4
GCGTG:	3
GTGCC:	1
GTGCT:	5
TGCCT:	2
TGCTT:	6

T: C G T G C G T G C T T

P: G C G T G C

Querying the index

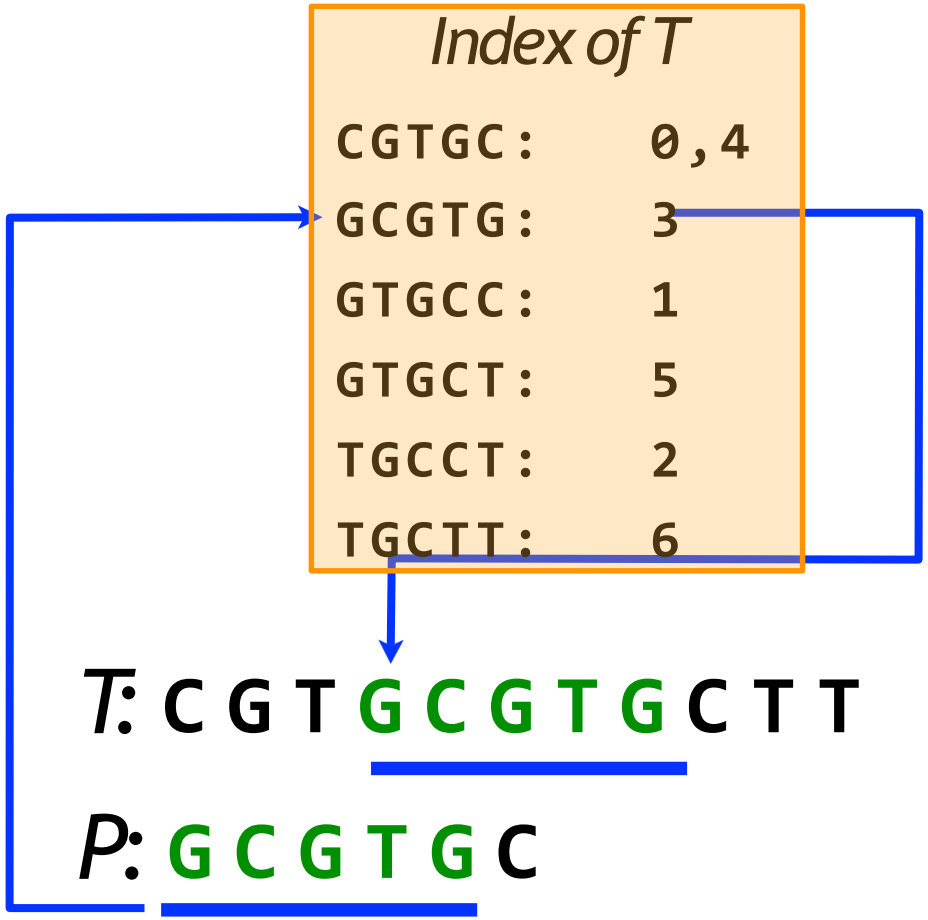

Querying the index

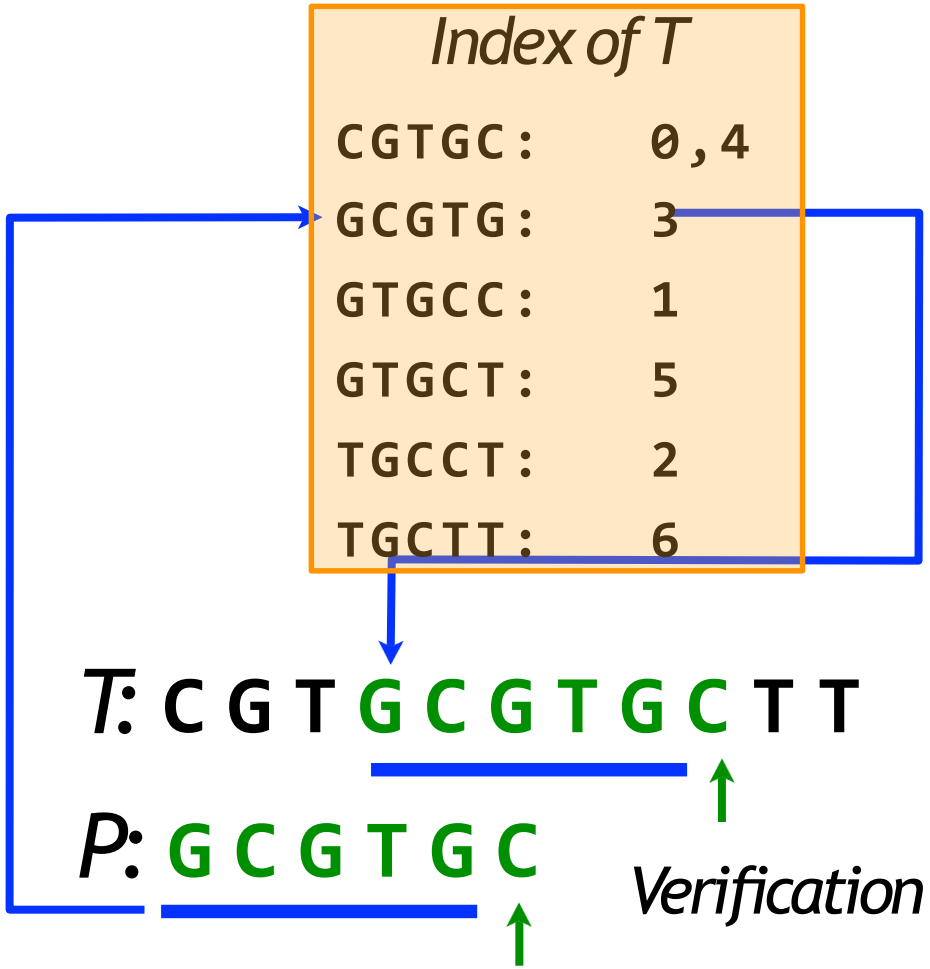

Querying the index

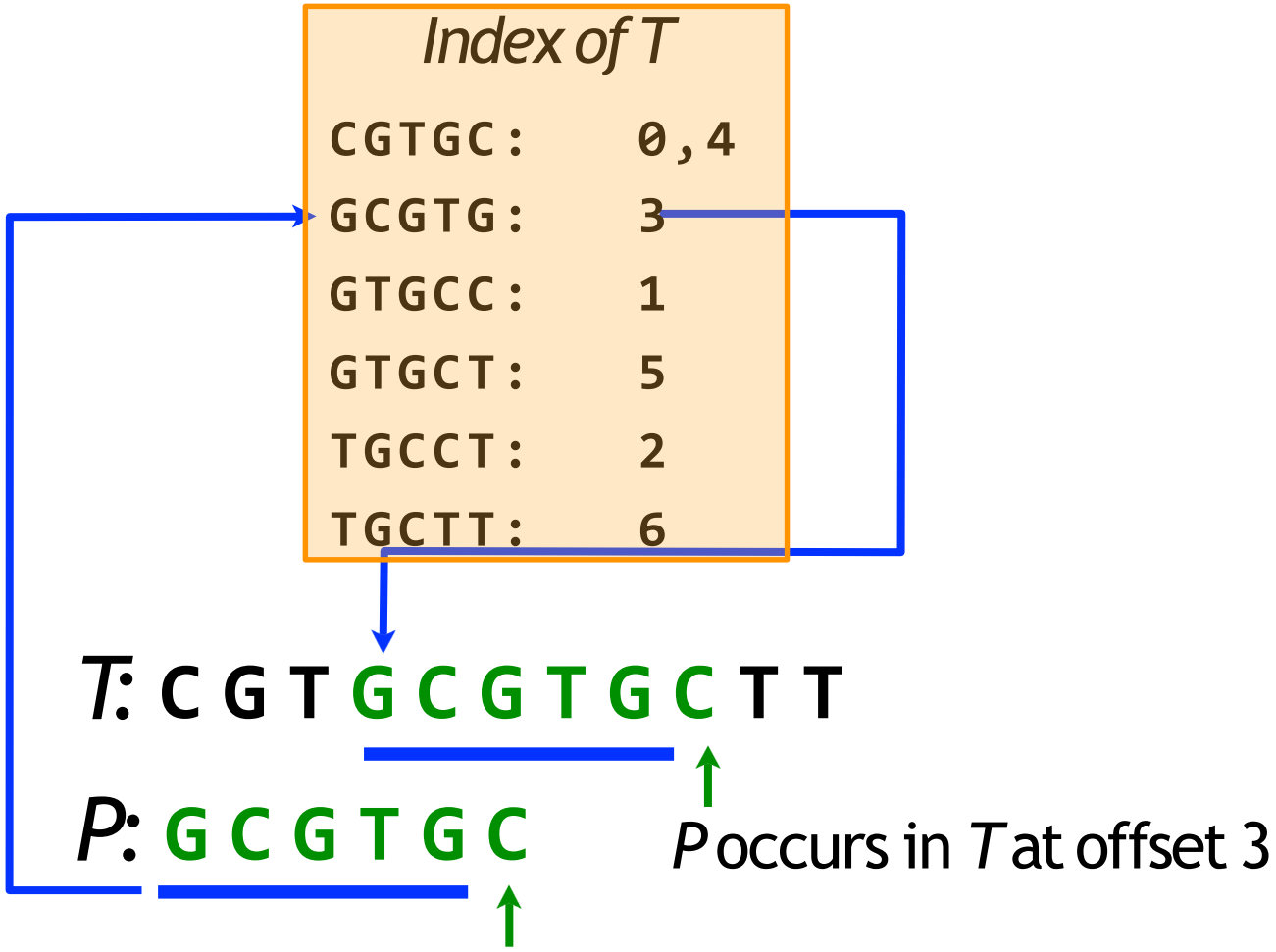

Querying the index

Index of T

CGTGC:	0,4
GCGTG:	3
GTGCC:	1
GTGCT:	5
TGCCT:	2
TGCTT:	6

?

T: C G T G C G T G C T T

P: G C G T G C

Querying the index

Index of T

CGTGC:	0,4
GCGTG:	3
GTGCC:	1
GTGCT:	5
TGCCT:	2
TGCTT:	6

T: C G T G C G T G C T T

P: G C G T G C

Querying the index

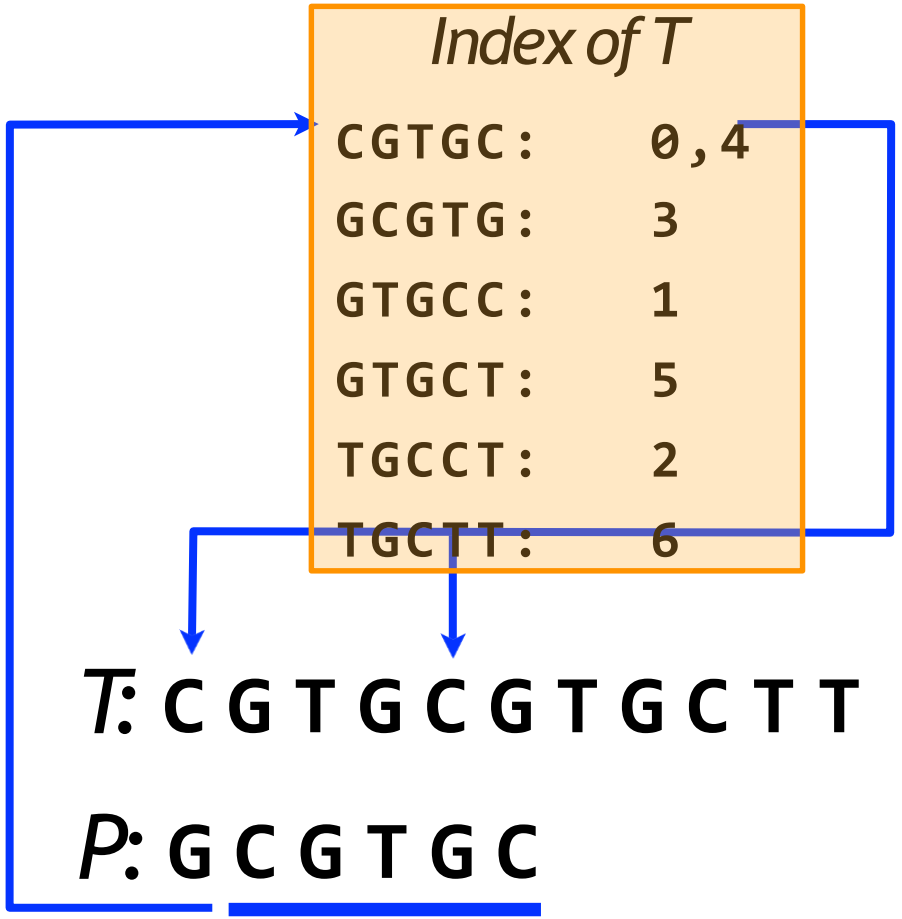

Querying the index

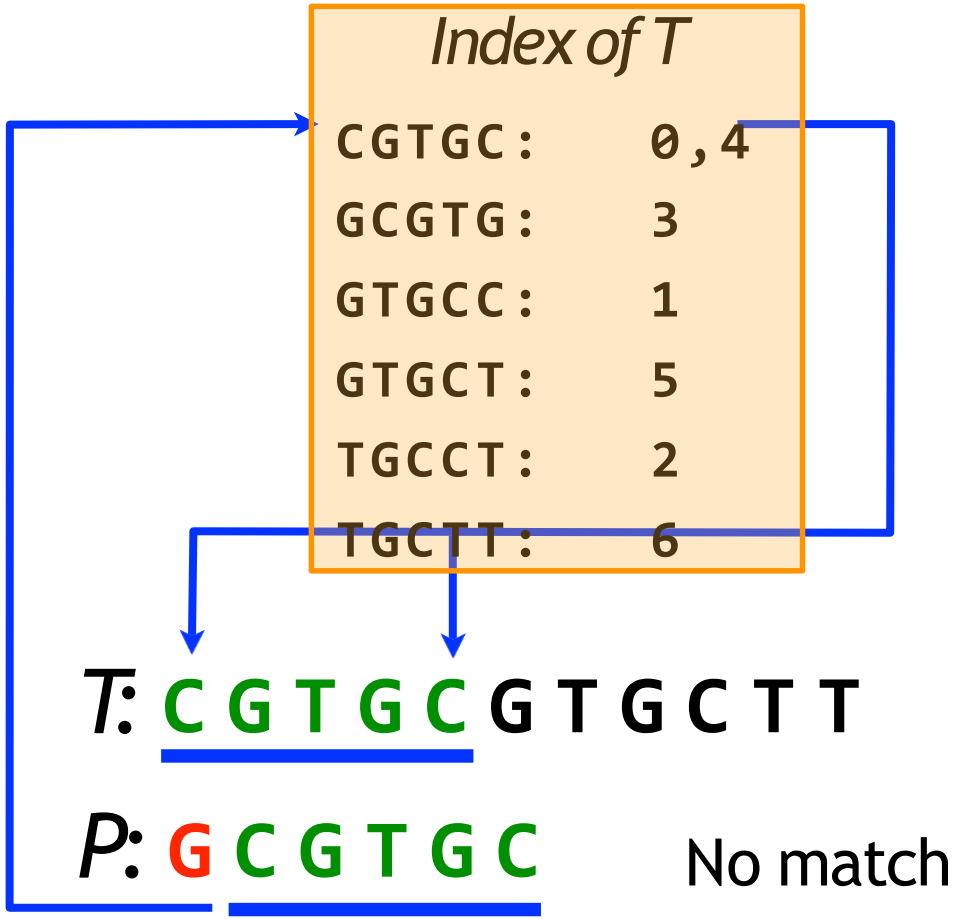

Querying the index

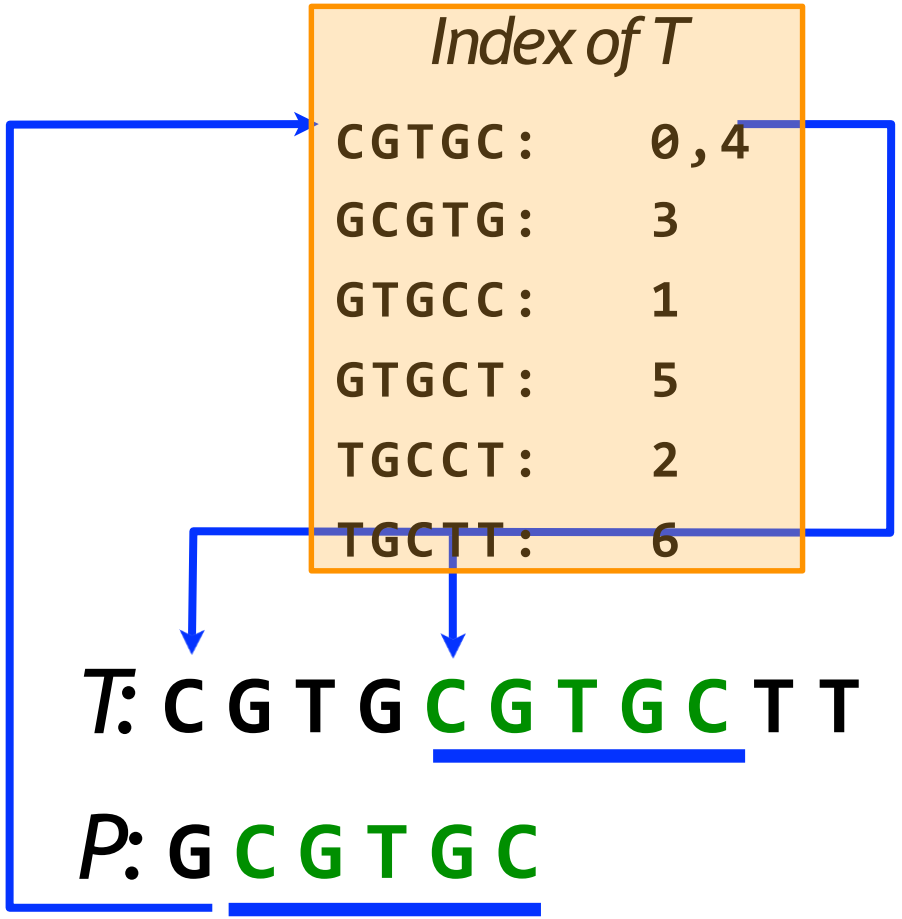

Querying the index

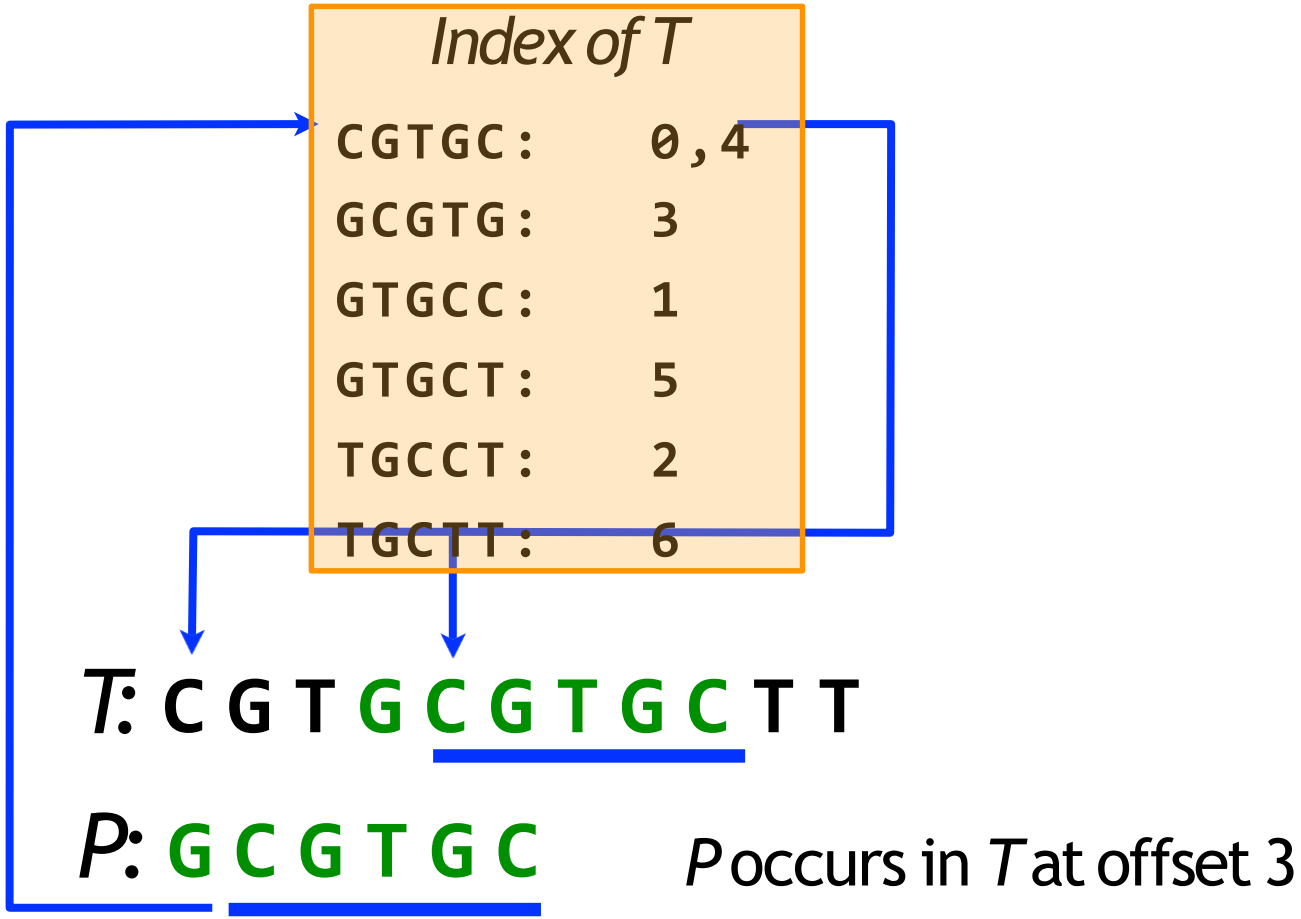

P occurs in *T* at offset 3

Querying the index

Index of T

CGTGC:	0,4
GCGTG:	3
GTGCC:	1
GTGCT:	5
TGCCT:	2
TGCTT:	6

T: C G T G C G T G C T T

P: G C G T G A

Querying the index

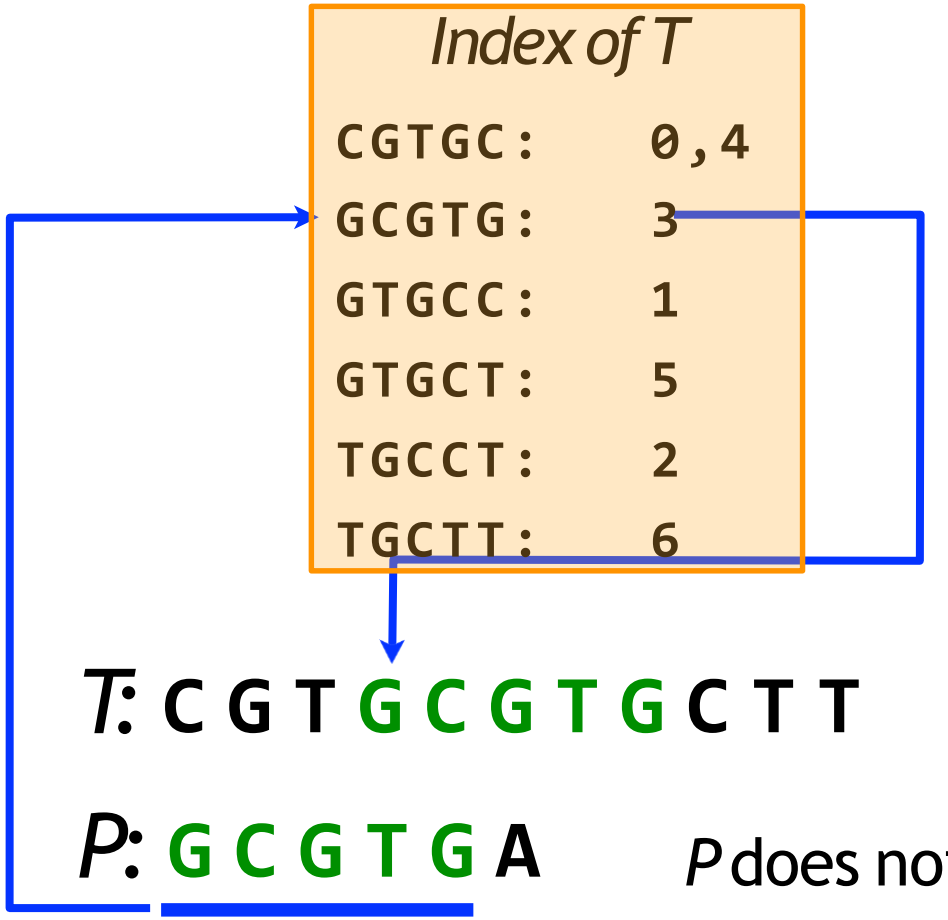

P does not occur in *T*

Querying the index

Index of T

CGTGC:	0,4
GCGTG:	3
GTGCC:	1
GTGCT:	5
TGCCT:	2
TGCTT:	6

T: C G T G C G T G C T T

P: G C G T A C

Querying the index

Index of T

CGTGC:	0,4
GCGTG:	3
GTGCC:	1
GTGCT:	5
TGCCT:	2
TGCTT:	6

X

T: C G T G C G T G C T T

P: G C G T A C

P does not occur in *T*

Querying the index

Index of T

CGTGC:	0,4
GCGTG:	3
GTGCC:	1
GTGCT:	5
TGCCT:	2
TGCTT:	6

1 index *hit*

T: C G T G C G T G C T T

P: G C G T G C

Querying the index

Index of T

CGTGC:	0,4
GCGTG:	3
GTGCC:	1
GTGCT:	5
TGCCT:	2
TGCTT:	6

2 index *hits*

T: C G T G C G T G C T T

P: G C G T G C

Data structures

Index of T

```
CGTGC:    0,4
GCGTG:    3
GTGCC:    1
GTGCT:    5
TGCCT:    2
TGCTT:    6
```

Abstractly, index is a *multimap* associating keys (k-mers) with one or more values (offsets)

What data structures allow us to represent and query a multimap?

3 Hash Tables

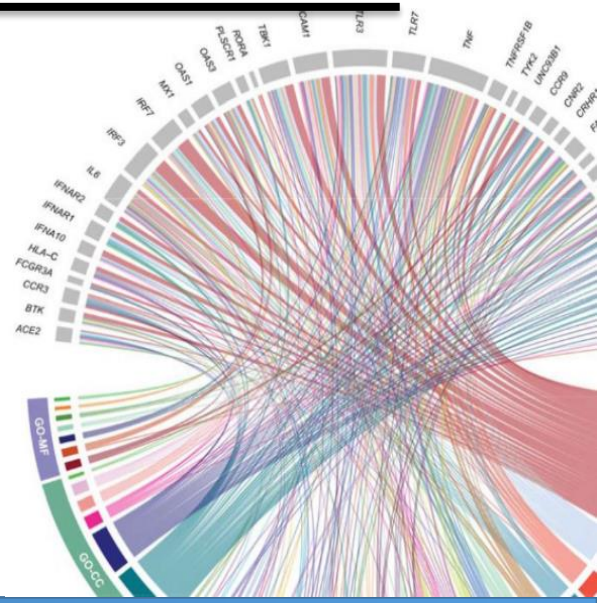

Hash table as multimap

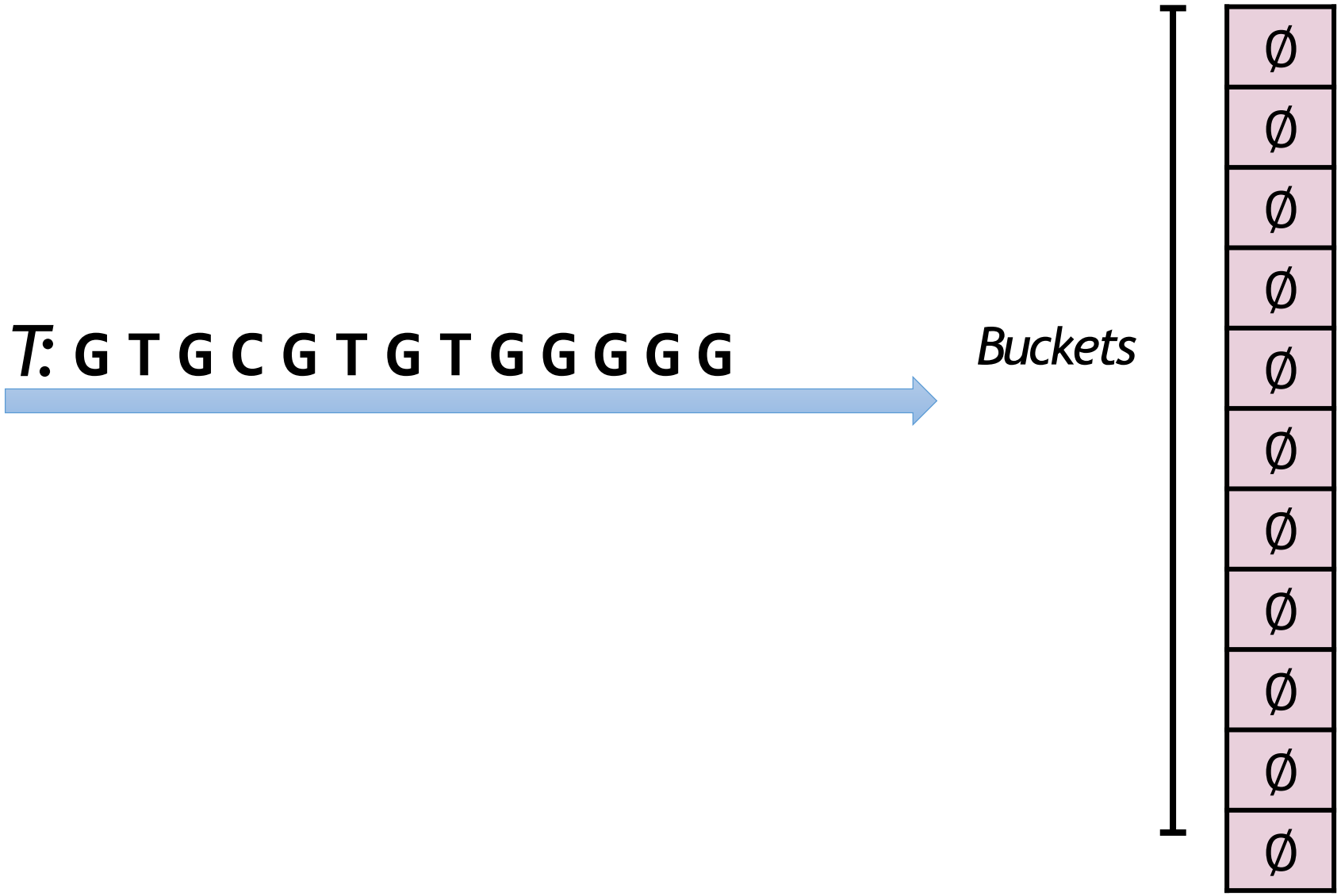

Hash function *h* maps 3-mers to buckets

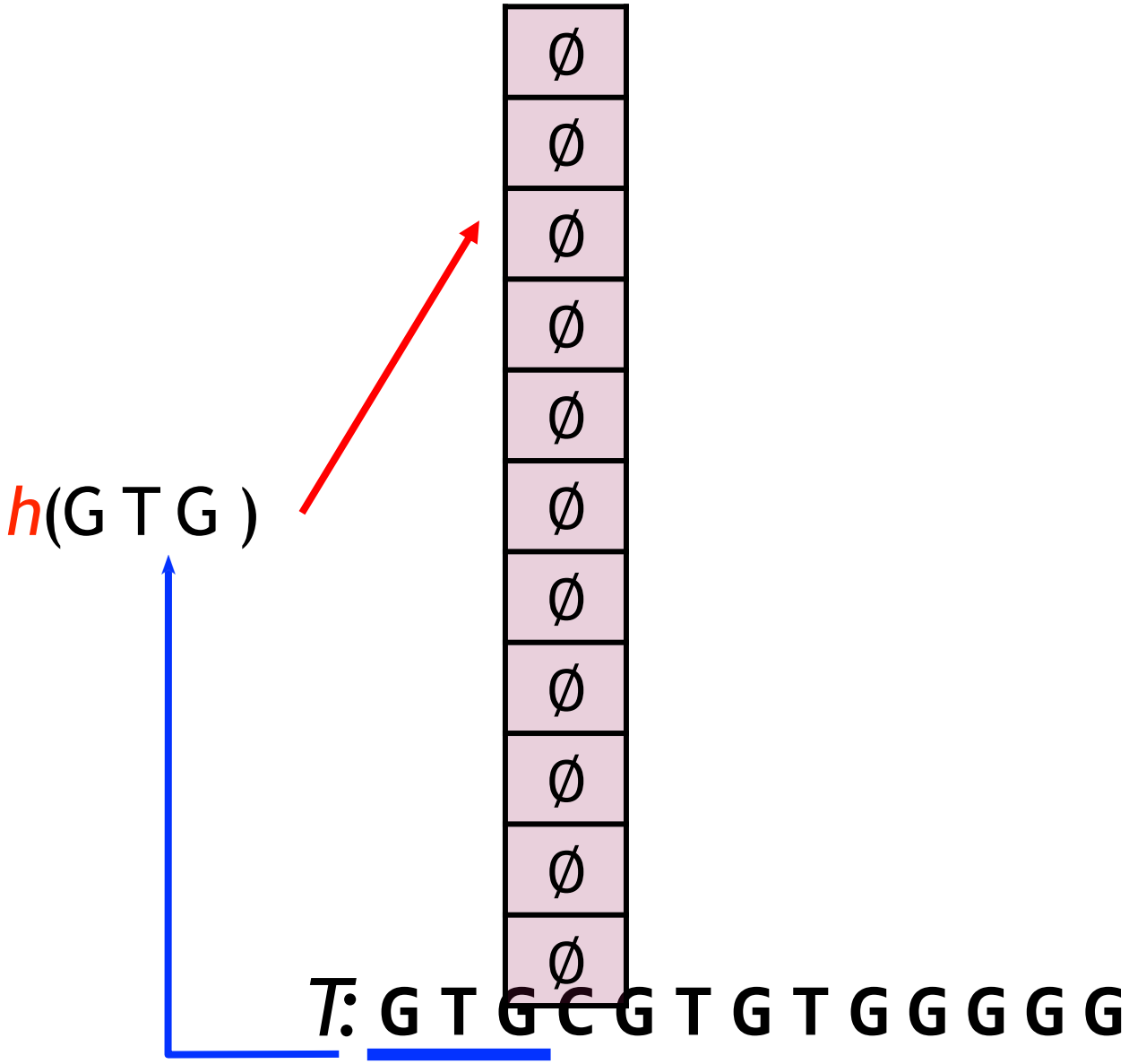
h(G T G)
Ø
Ø
Ø
Ø
Ø
Ø
Ø
Ø
Ø
Ø
Ø
T: G T G C G T G T G G G G G

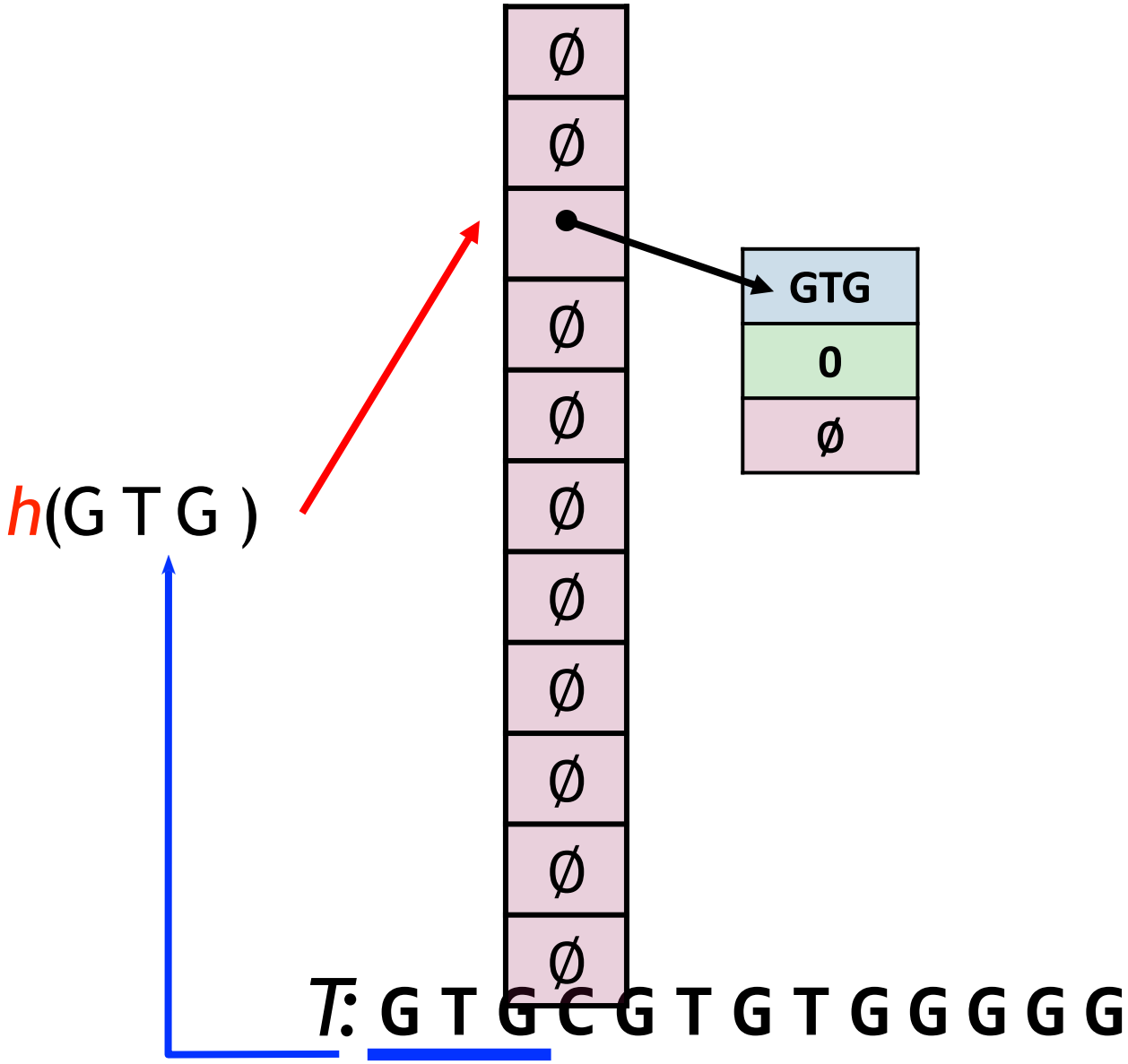
Ø
Ø
Ø
Ø
Ø
Ø
Ø
Ø
Ø
Ø
Ø
Ø
GTG
0
Ø
h(G T G)
T: G T G C G T G T G G G G G

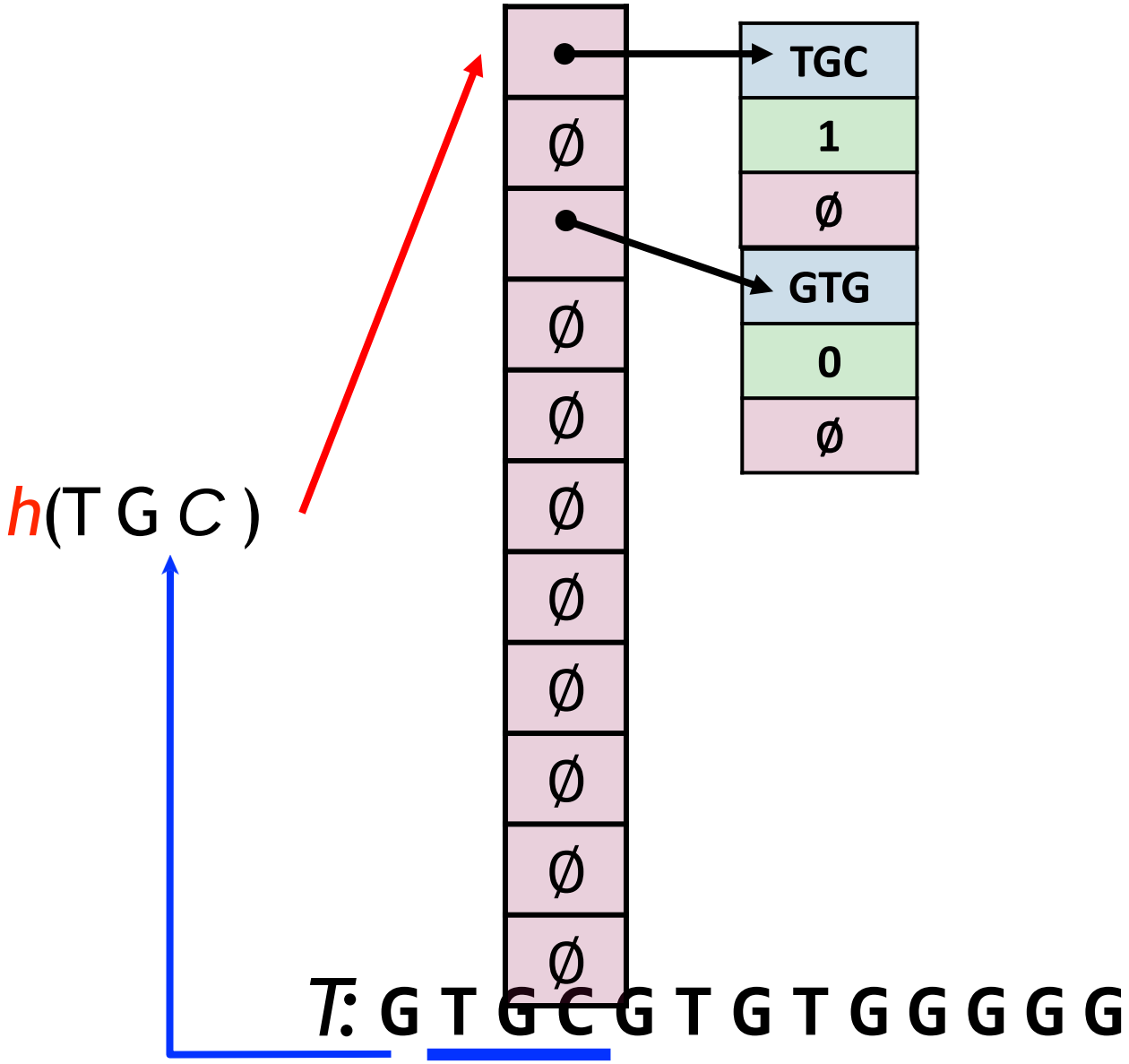
TGC
1
Ø
GTG
0
Ø
Ø
Ø
Ø
Ø
Ø
Ø
Ø
Ø
Ø
h(T G C)
T: G T G C G T G T G G G G G

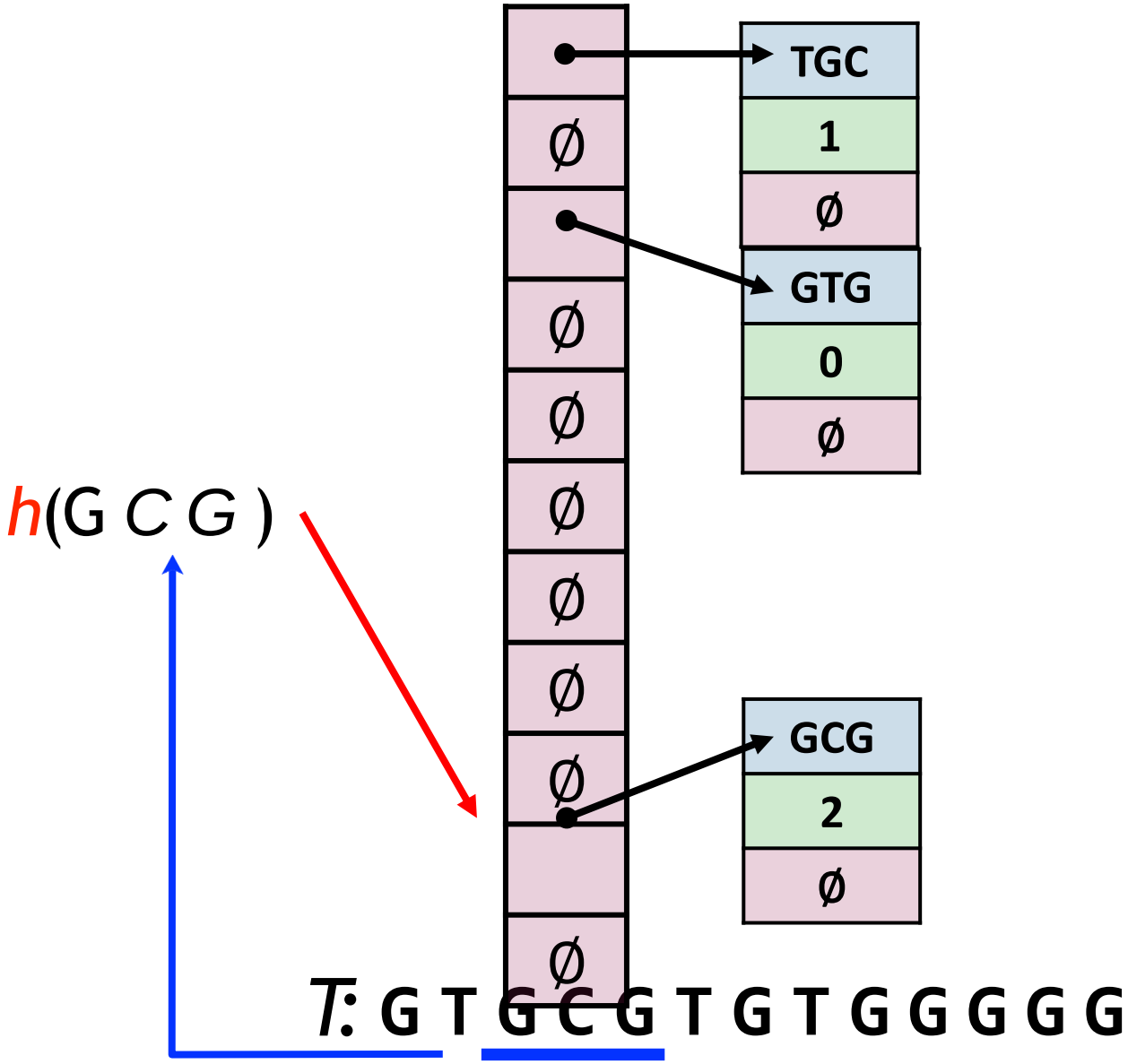
TGC
1
Ø
GTG
0
Ø
GCG
2
Ø
Ø
Ø
Ø
Ø
Ø
Ø
Ø
Ø
h(G C G)
T: G T G C G T G T G G G G G

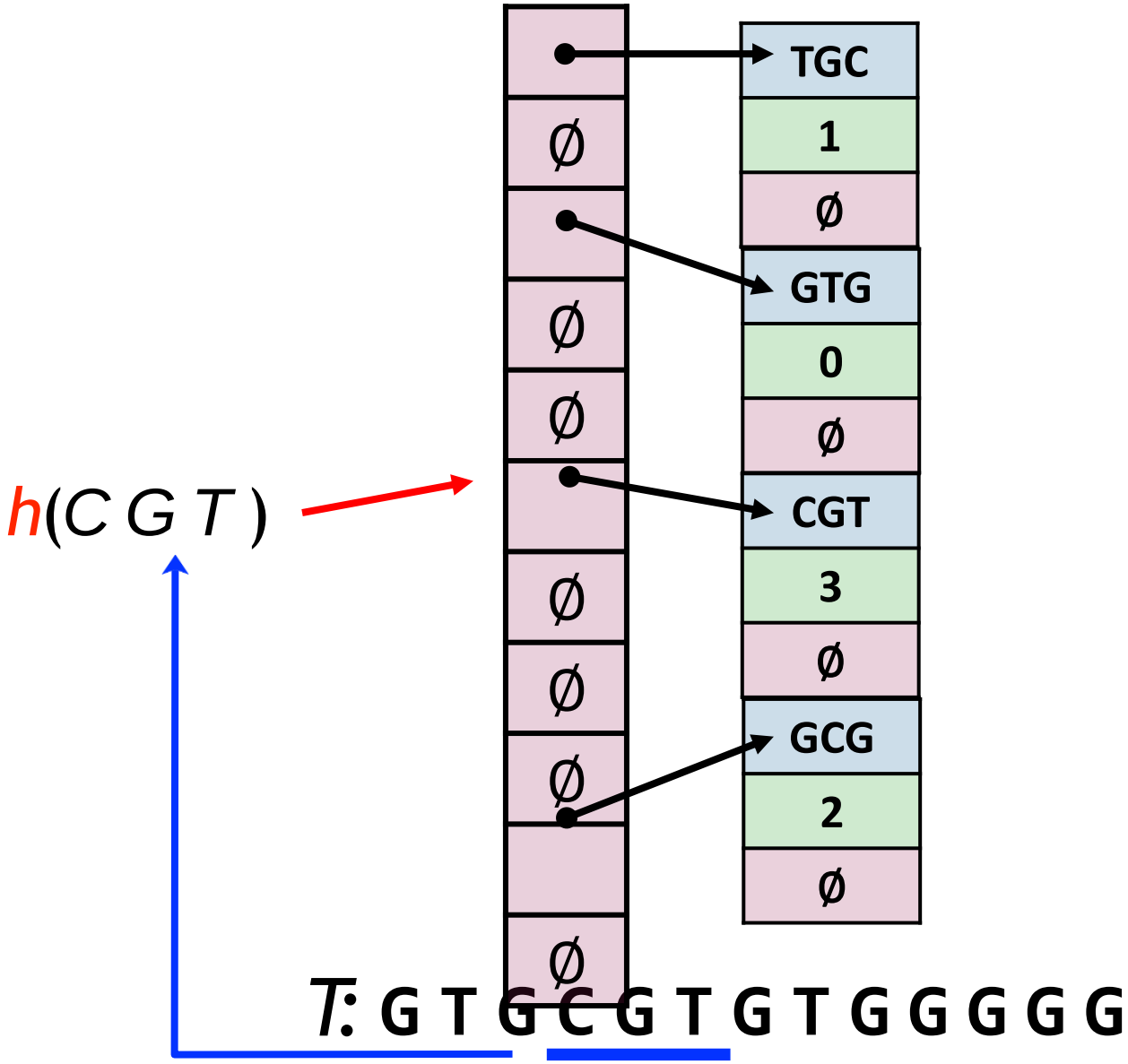
h(C G T)
Ø
Ø
Ø
Ø
Ø
Ø
Ø
Ø
TGC
1
Ø
GTG
0
Ø
CGT
3
Ø
GCG
2
Ø
T: G T G C G T G T G G G G G

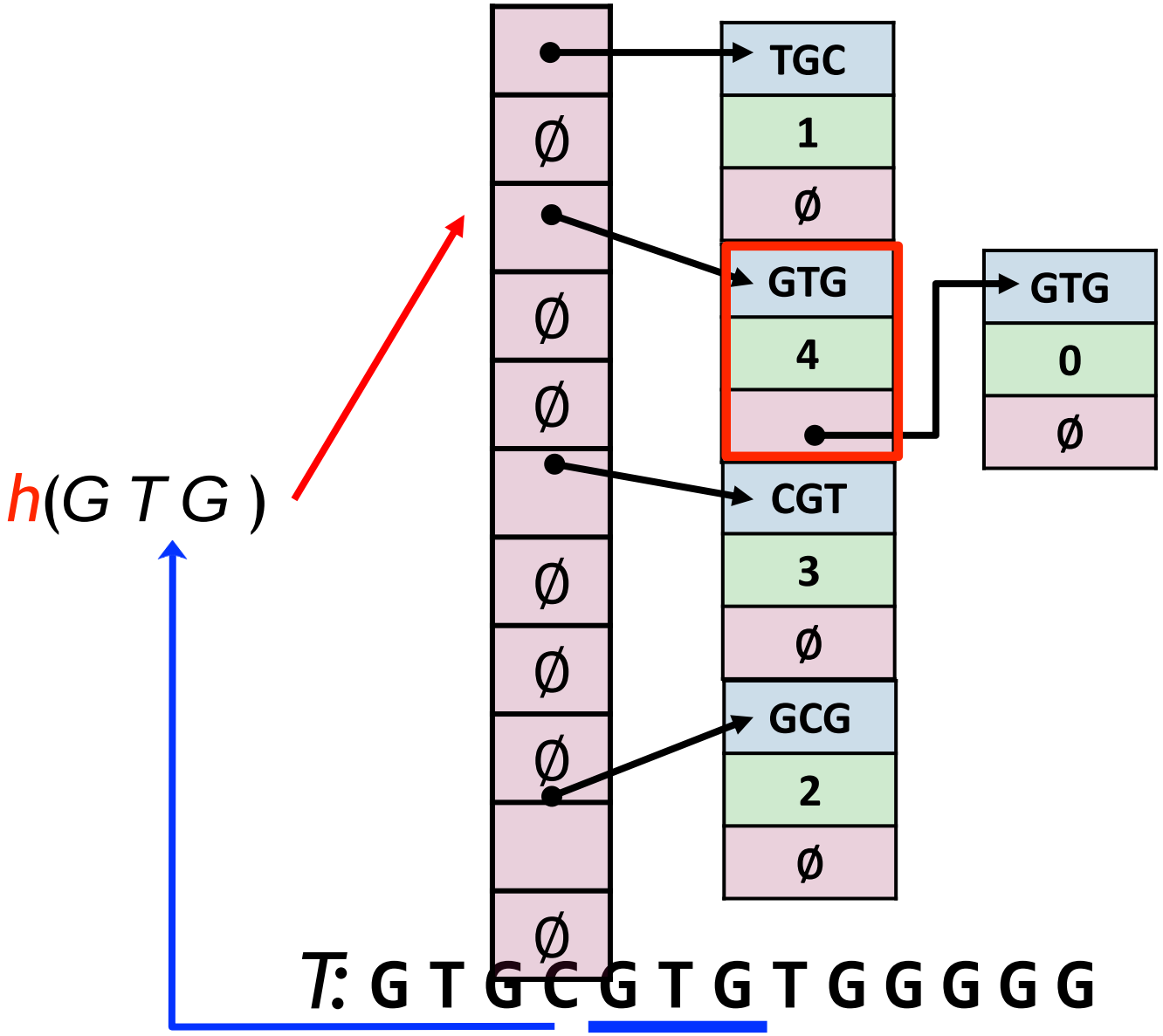
h(G T G)
TGC
1
Ø
GTG
4
CGT
3
Ø
GCG
2
Ø
GTG
0
Ø
Ø
Ø
Ø
Ø
Ø
Ø
Ø
Ø
T: G T G C G T G T G G G G G

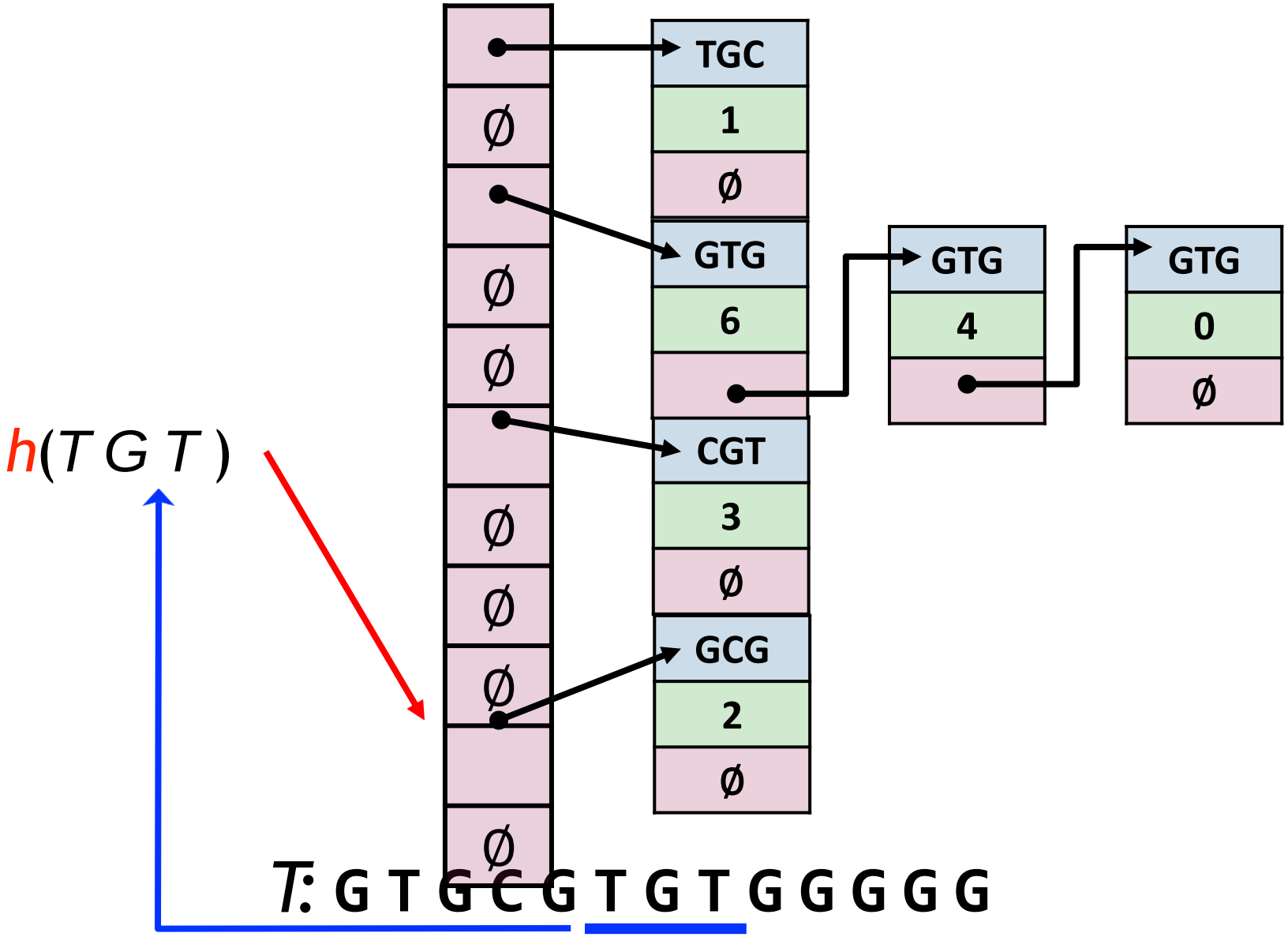
TGC
1
Ø
GTG
6
CGT
3
Ø
GCG
2
Ø
GTG
4
GTG
0
Ø
Ø
Ø
Ø
Ø
Ø
Ø
Ø
Ø
h(T G T)
T: G T G C G T G T G G G G G

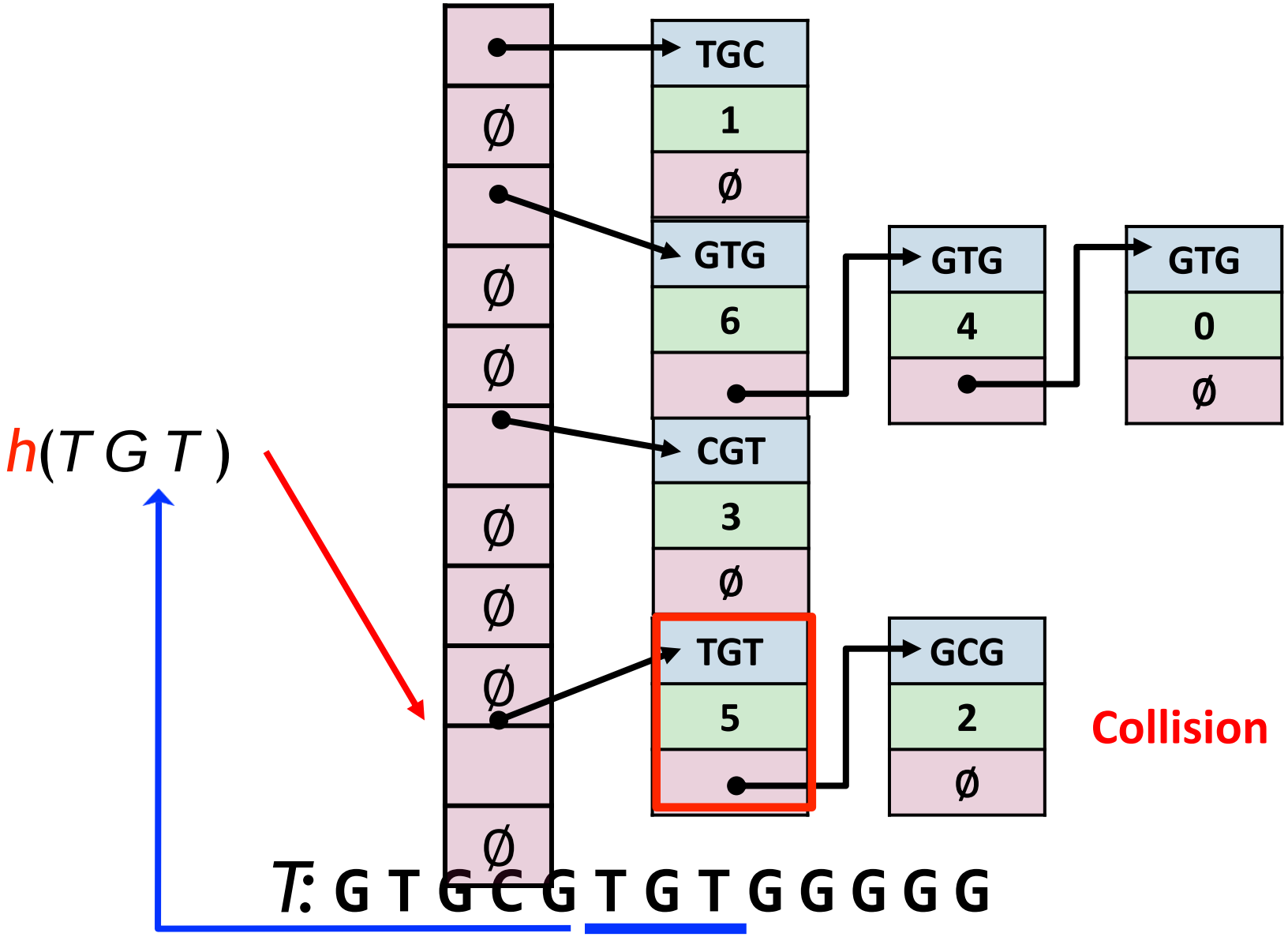
h(T G T)
TGC
1
Ø
GTG
6
CGT
3
Ø
TGT
5
GTG
4
GTG
0
Ø
GCG
2
Ø
Collision
T: G T G C G T G T G G G G G

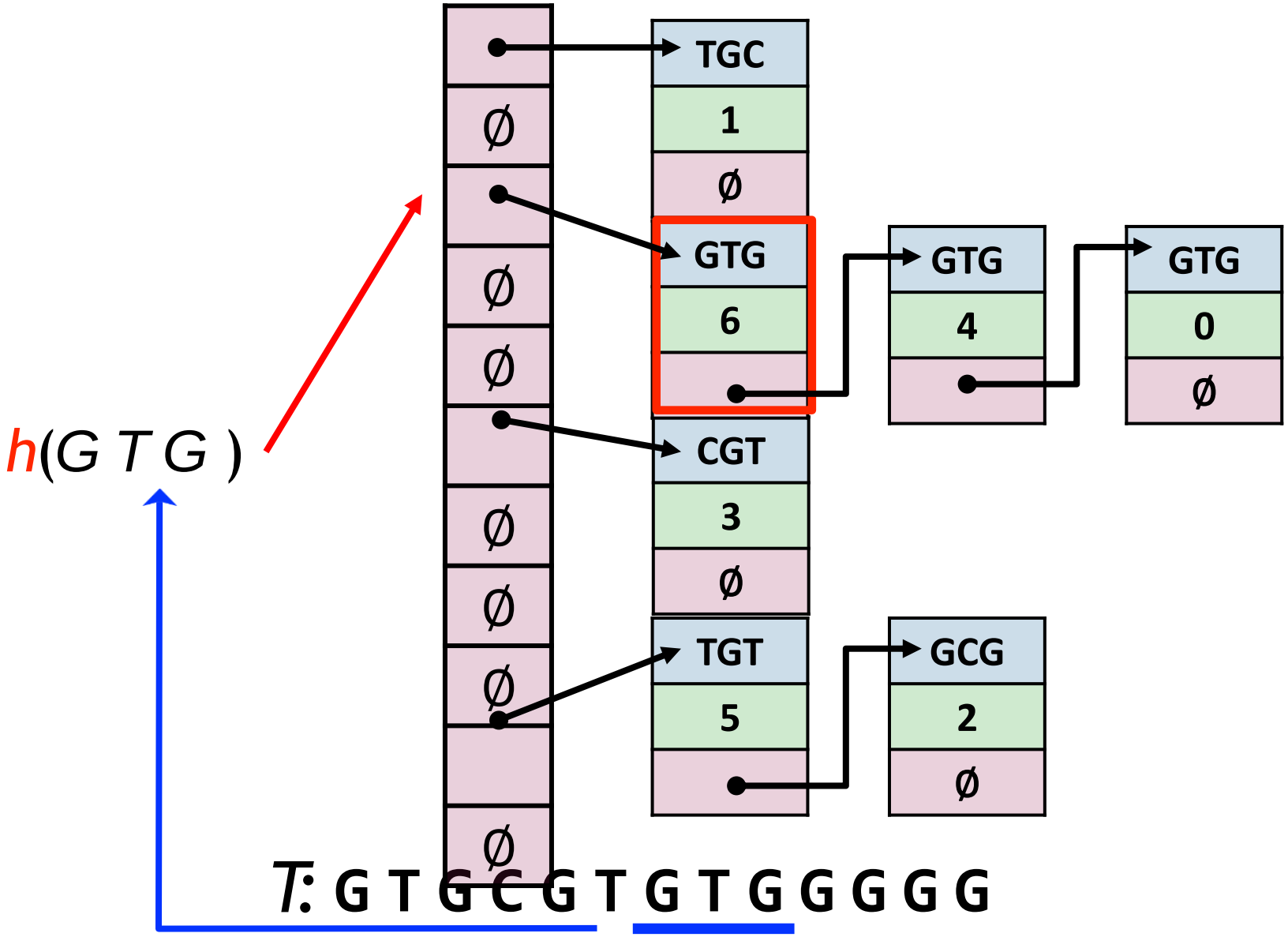
h(G T G)
TGC
1
Ø
GTG
6
GTG
4
GTG
0
Ø
CGT
3
Ø
TGT
5
GCG
2
Ø
Ø
Ø
Ø
Ø
Ø
Ø
Ø
Ø
T: G T G C G T G T G G G G G

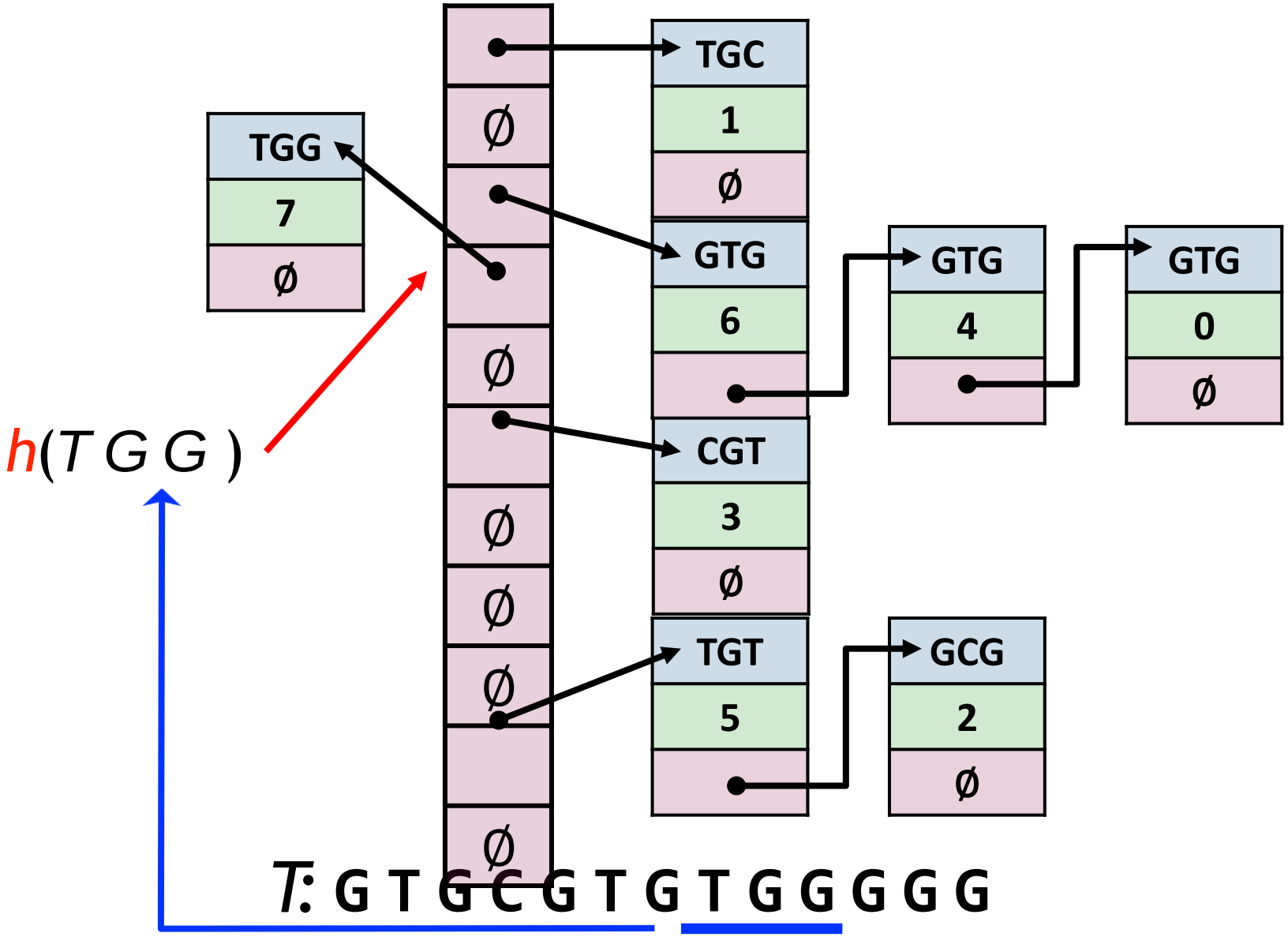
TGG
7
Ø
h(T G G)
Ø
Ø
Ø
Ø
Ø
Ø
Ø
TGC
1
Ø
GTG
6
CGT
3
Ø
TGT
5
GTG
4
GTG
0
Ø
GCG
2
Ø
T: G T G C G T G T G G G G G

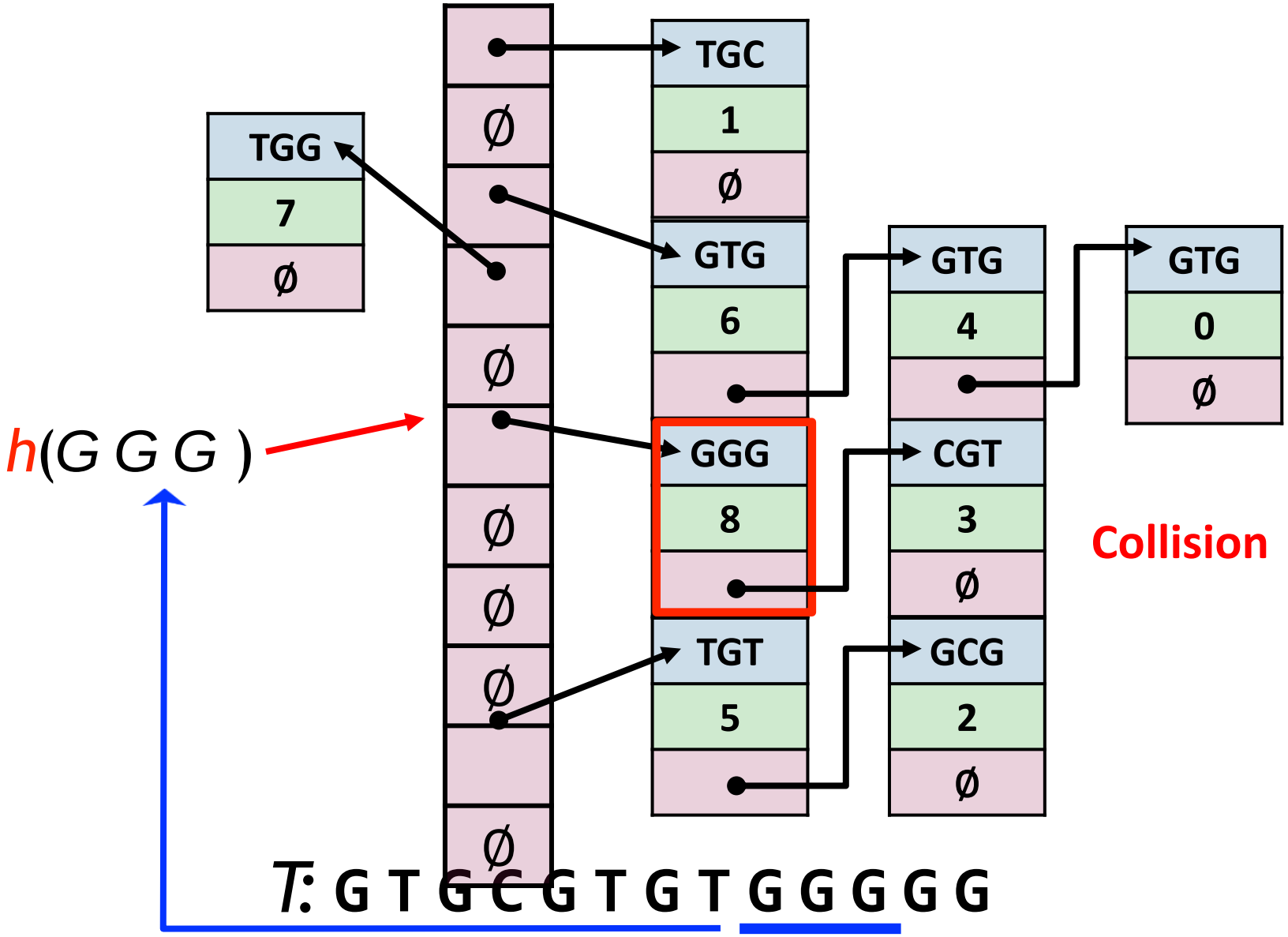
TGG
7
Ø
TGC
1
Ø
GTG
6
GGG
8
TGT
5
GTG
4
CGT
3
Ø
GCG
2
Ø
GTG
0
Ø
Ø
Ø
Ø
Ø
Ø
Ø
h(G G G)
Collision
T: G T G C G T G T G G G G G

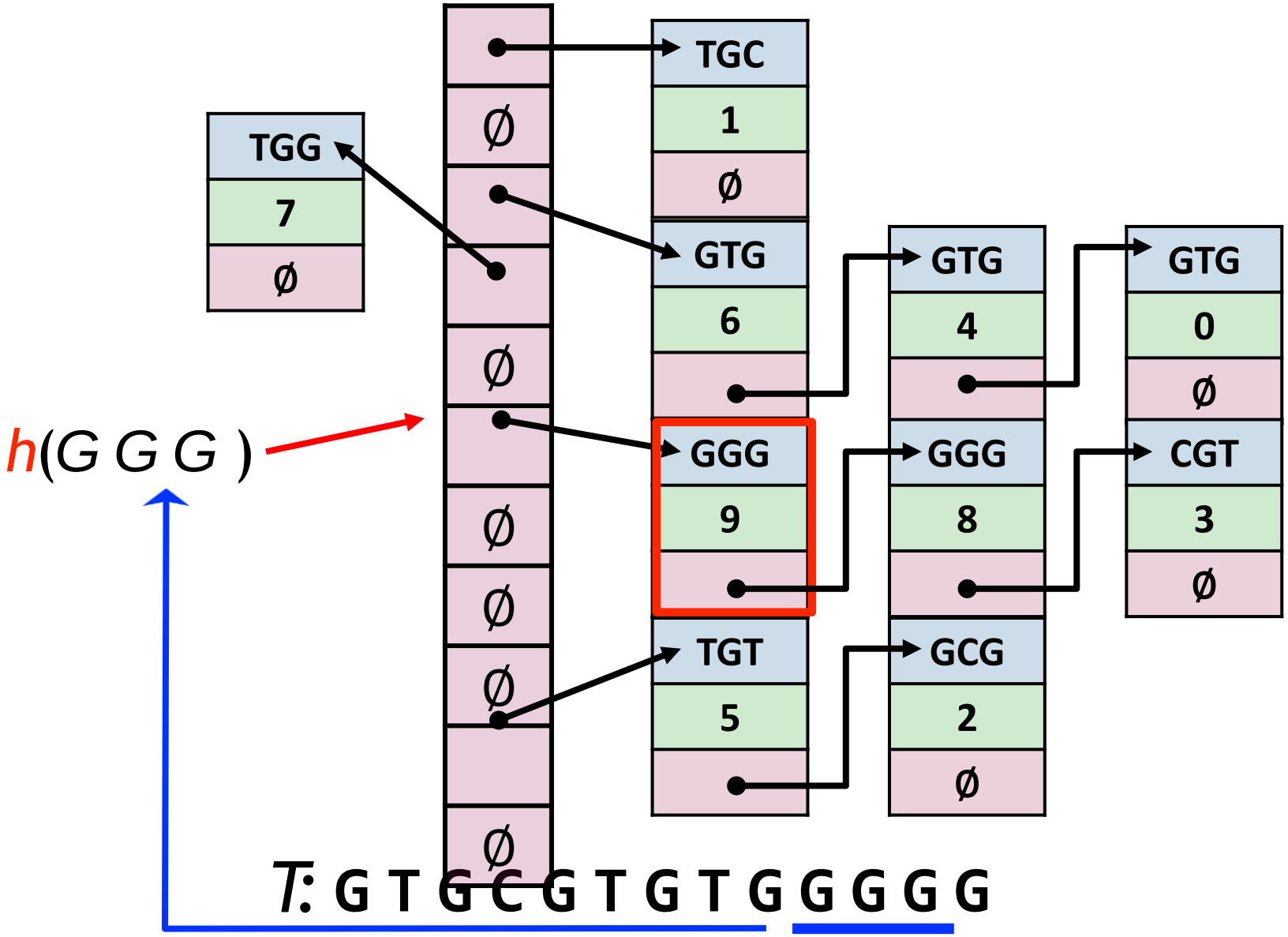
TGG
7
Ø
TGC
1
Ø
GTG
6
GGG
9
TGT
5
GTG
4
GGG
8
GCG
2
Ø
GTG
0
Ø
CGT
3
Ø
h(G G G)
T: G T G C G T G T G G G G G

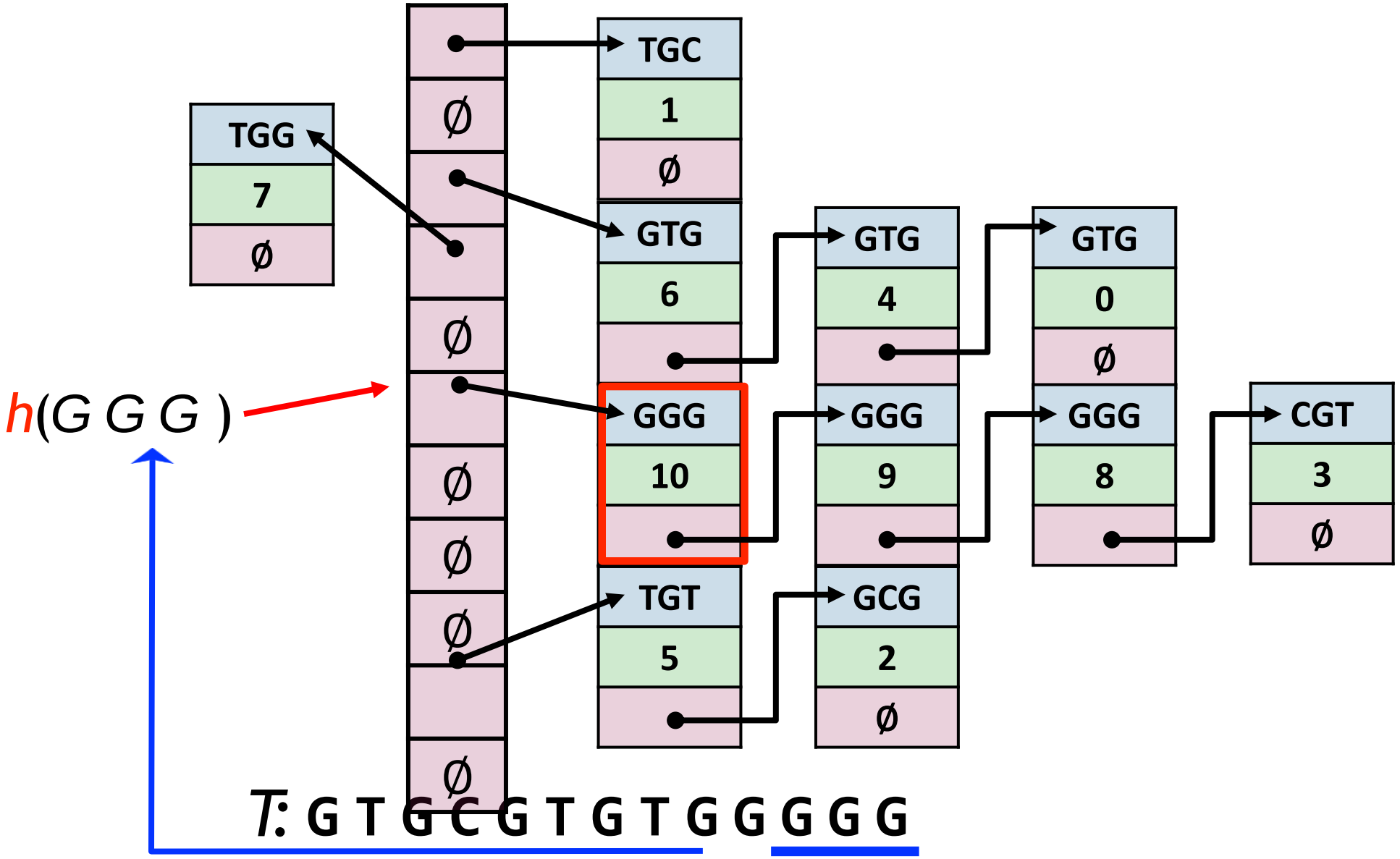
TGG
7
Ø
TGC
1
Ø
GTG
6
GTG
4
GTG
0
Ø
GGG
10
GGG
9
GGG
8
CGT
3
Ø
TGT
5
GCG
2
Ø
h(G G G)
T: G T G C G T G T G G G G G

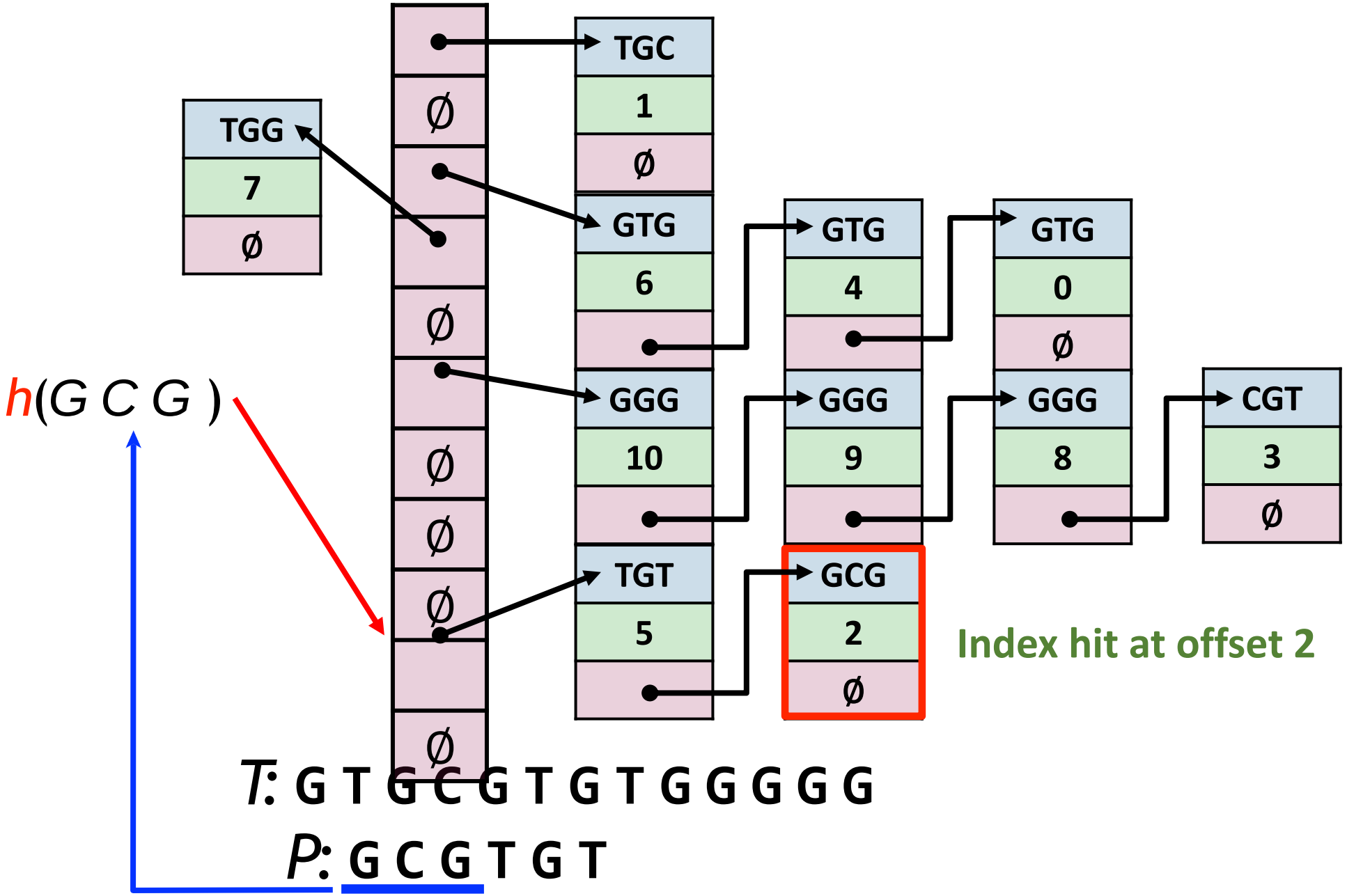
TGG
7
Ø
TGC
1
Ø
GTG
6
GTG
4
GTG
0
Ø
GGG
10
GGG
9
GGG
8
CGT
3
Ø
TGT
5
GCG
2
Ø
Index hit at offset 2
h(G C G)
T: G T G C G T G T G G G G G
P: G C G T G T

Questions

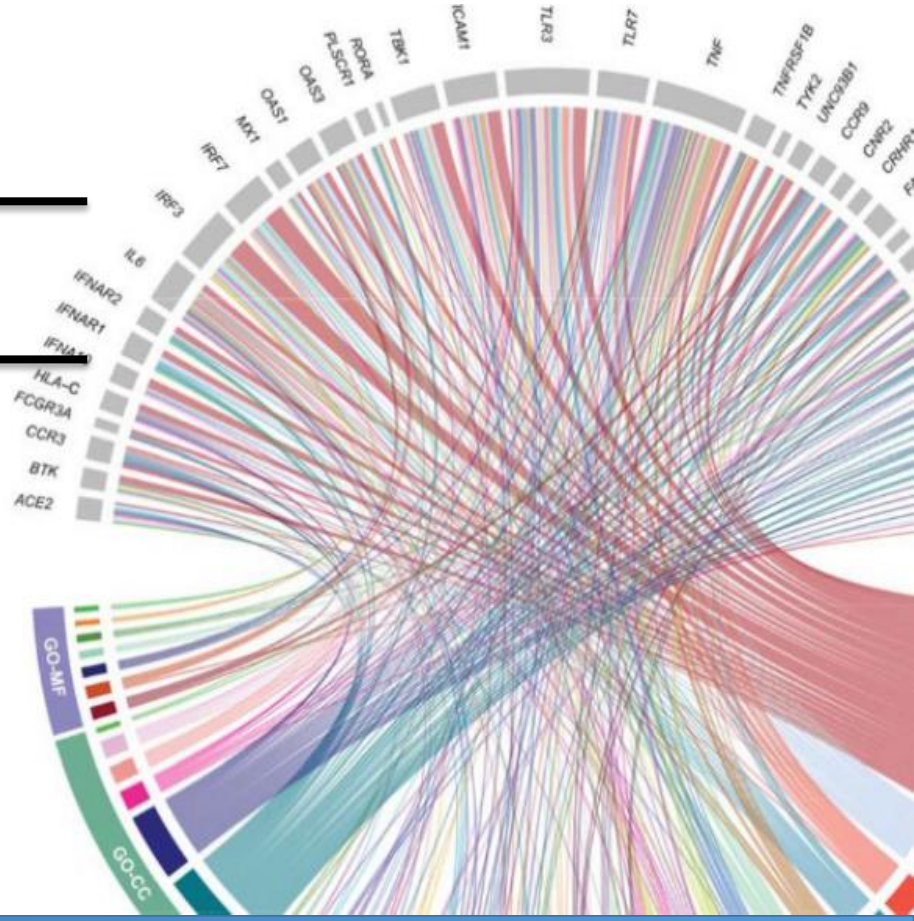
ACE2
BTK
CCR3
FCGR3A
HLA-C
IFNAR1
IFNAR2
IL6
IRF3
IRF7
MX1
OAS1
OAS3
PLSCR1
RORA
TBK1
ICAM1
TLR3
TLR7
TNF
TNFRSF1B
TYK2
UNC93B1
CCR9
CNR2
GO-MF
GO-CC