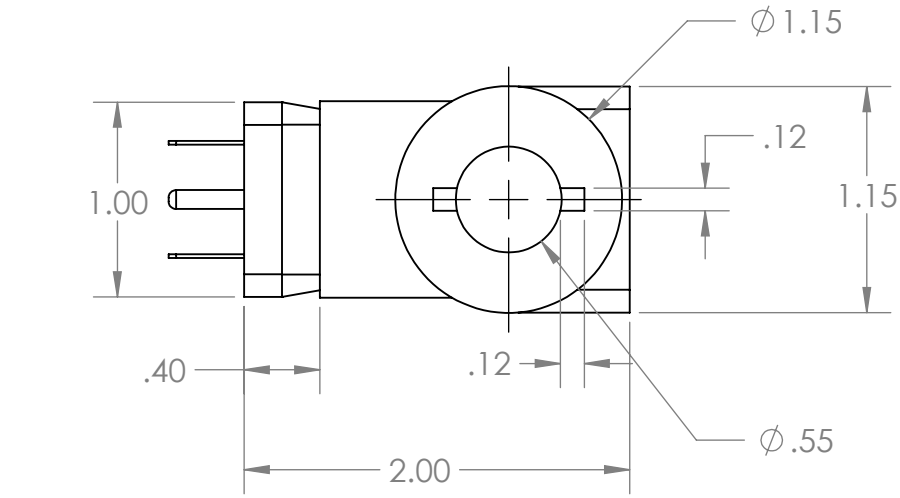

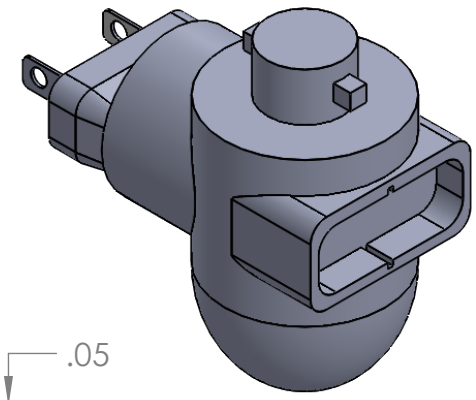

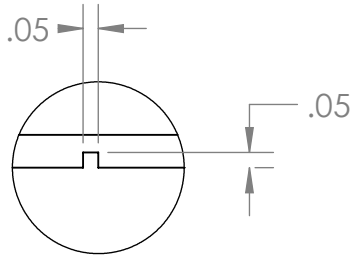

DETAIL A
SCALE 2 : 1

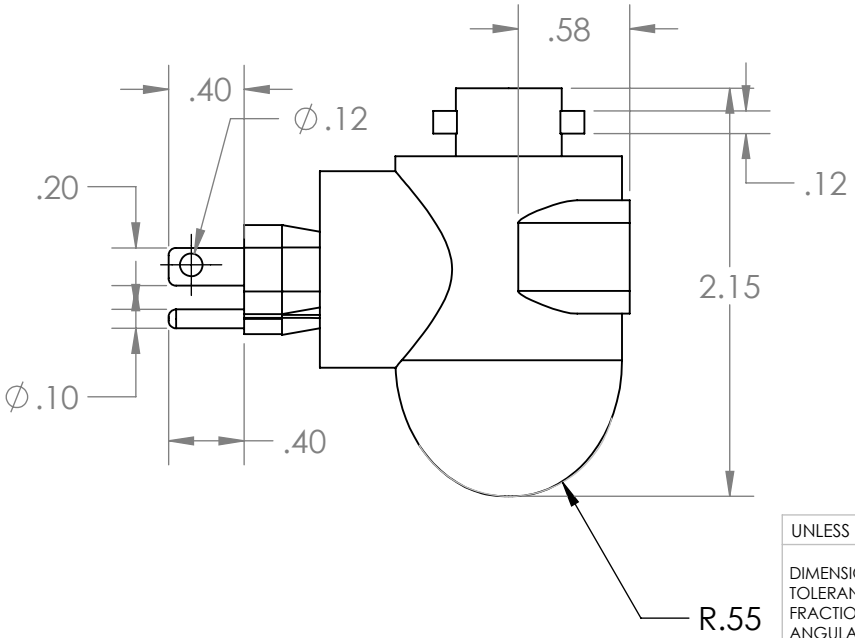

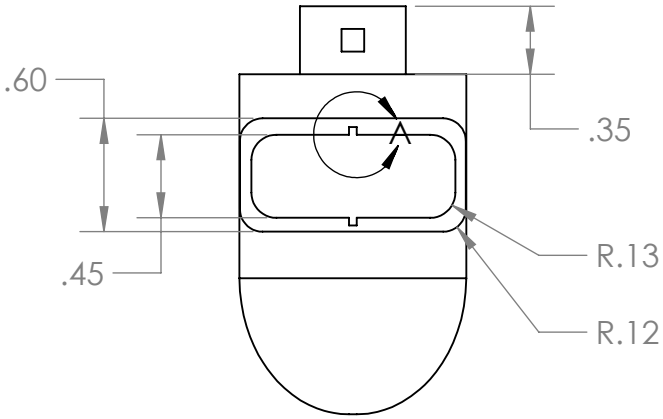

UNLESS OTHERWISE SPECIFIED:		NAME	DATE
DIMENSIONS ARE IN INCHES TOLERANCES: FRACTIONAL ± ANGULAR: MACH ± BEND ± TWO PLACE DECIMAL ± THREE PLACE DECIMAL ±	DRAWN	J.C	12/3/2022
	CHECKED		
	ENG APPR.		
	MFG APPR.		
INTERPRET GEOMETRIC TOLERANCING PER:	Q.A.		
MATERIAL Nylon 101	COMMENTS:		
FINISH			
DO NOT SCALE DRAWING			

CHAFFEY COLLEGE

TITLE:

ELECTRICAL OUTLET

SIZE	DWG. NO.	REV
A	DRFT21-5	-

SCALE: 1:1 | WEIGHT: 0.10 | SHEET 1 OF 1

PROPRIETARY AND CONFIDENTIAL

THE INFORMATION CONTAINED IN THIS DRAWING IS THE SOLE PROPERTY OF <INSERT COMPANY NAME HERE>. ANY REPRODUCTION IN PART OR AS A WHOLE WITHOUT THE WRITTEN PERMISSION OF <INSERT COMPANY NAME HERE> IS PROHIBITED.

NEXT ASSY	USED ON
APPLICATION	

SOLIDWORKS Educational Product. For Instructional Use Only.