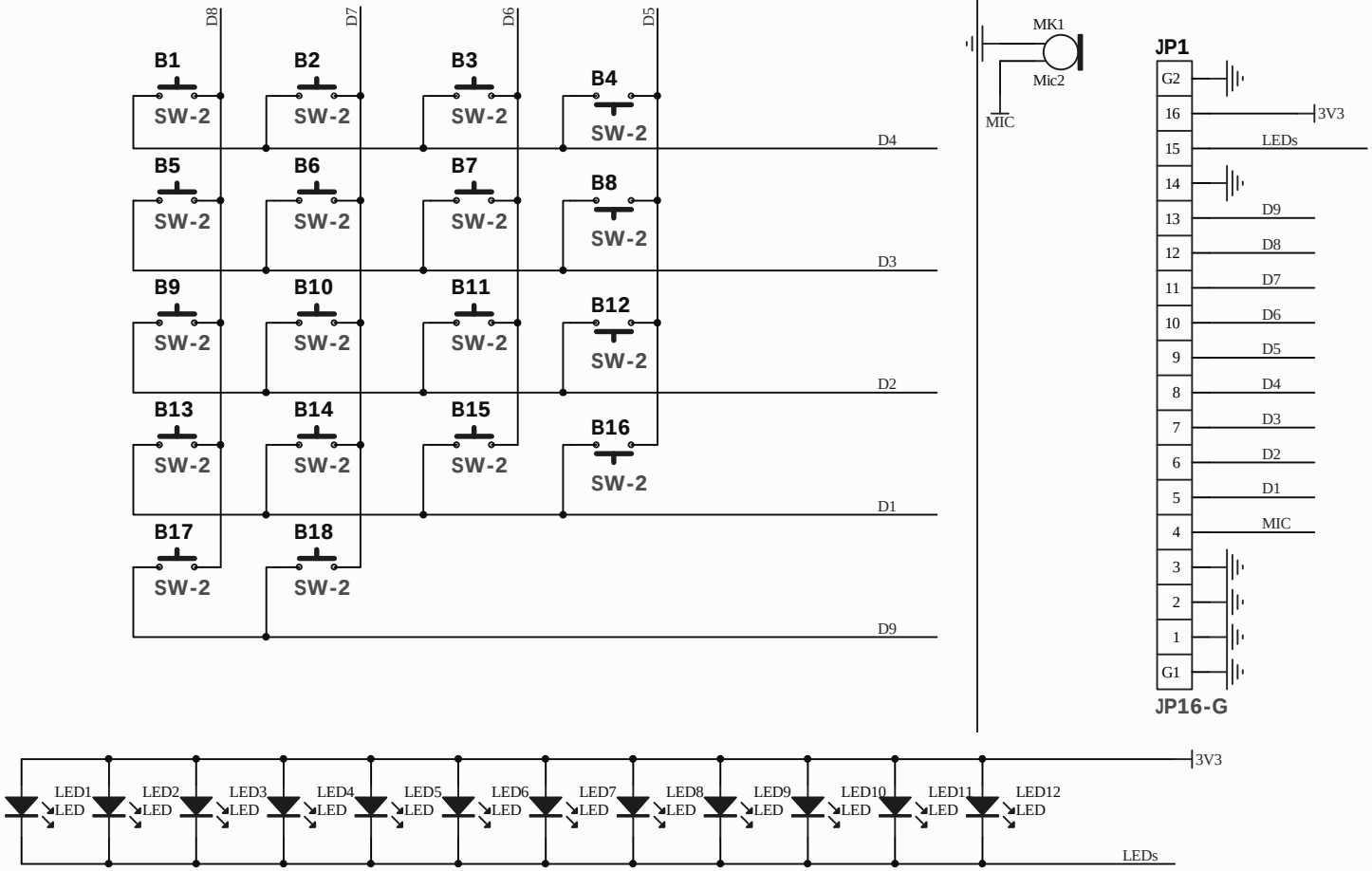

Title		
Size A4	Number	Revision
Date: 2025-06-13	Sheet of	
File: _ C62 KEYPAD.SchDoc	Drawn By:	