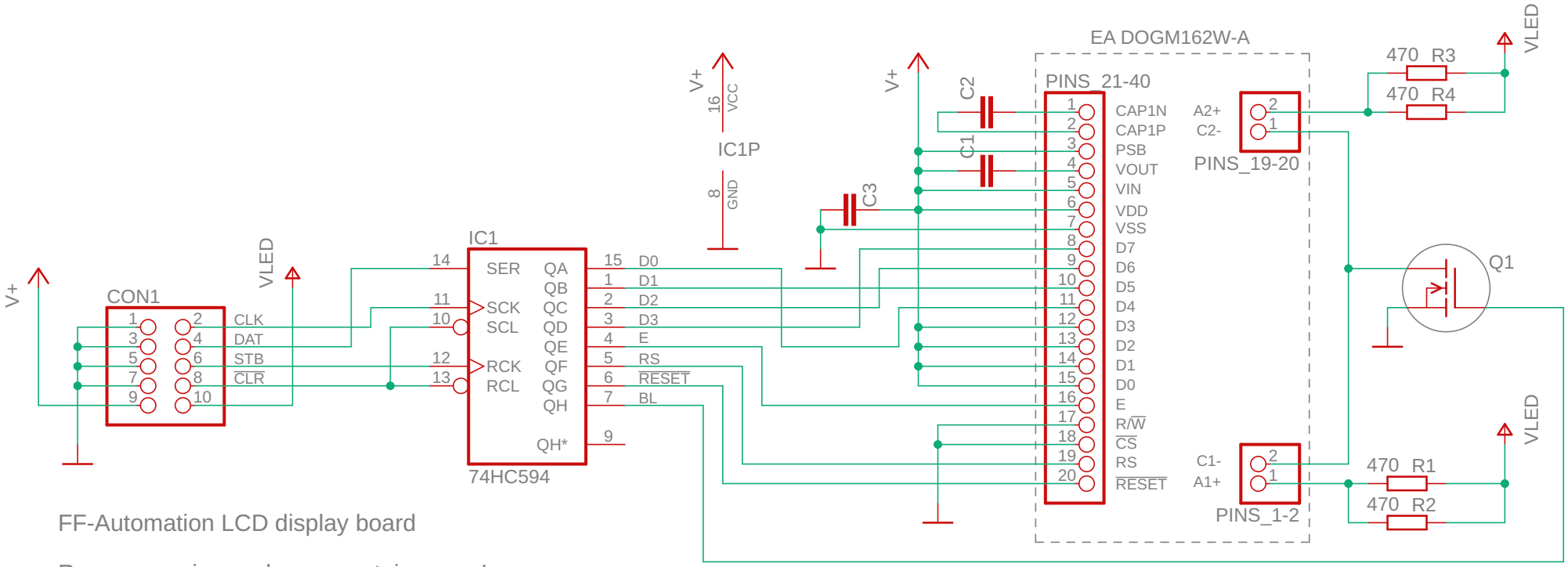

FF-Automation LCD display board

Reverse engineered, may contain errors!