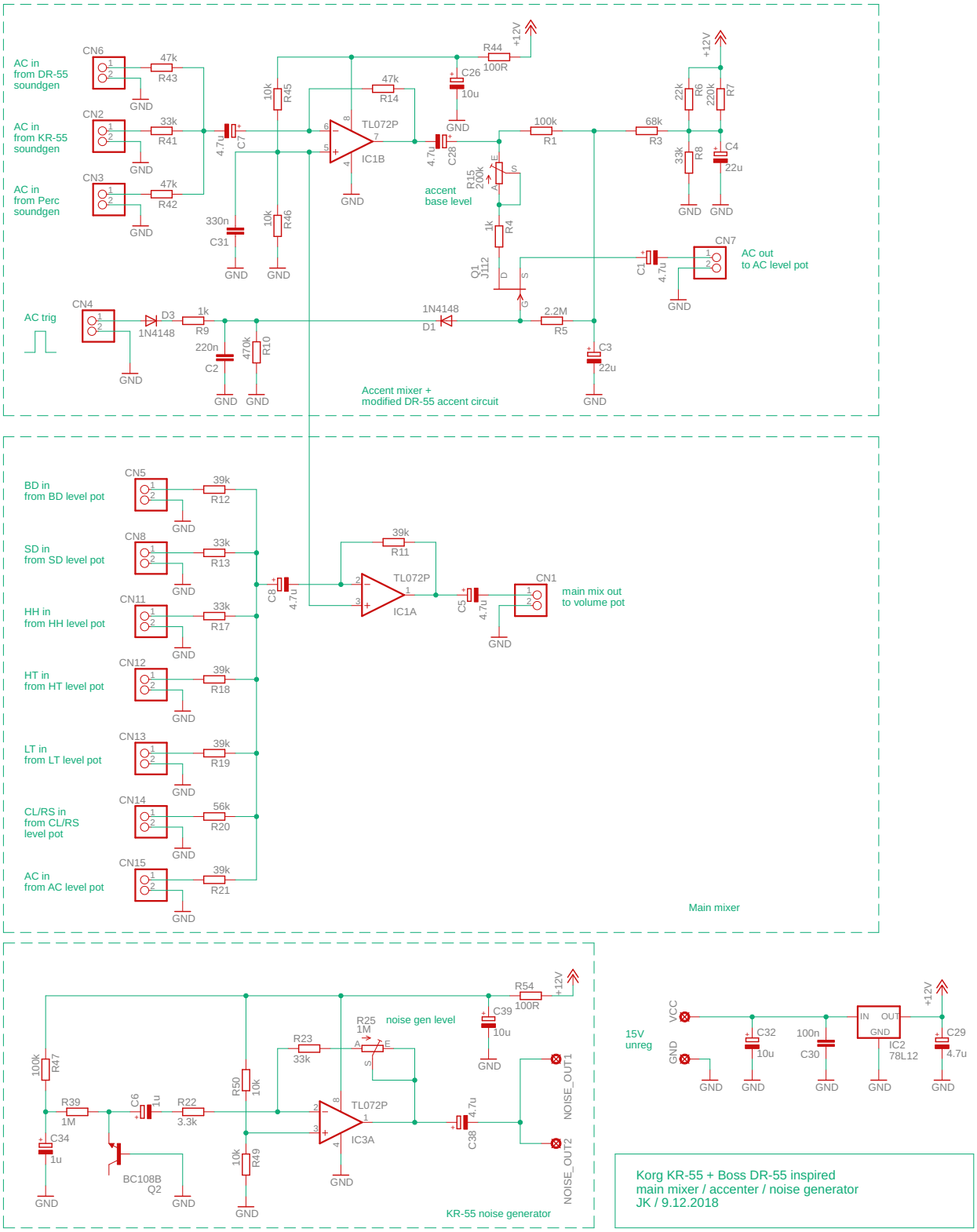
AC in
from DR-55
soundgen
AC in
from KR-55
soundgen
AC in
from Perc
soundgen
AC trig
CN6
CN2
CN3
CN4
47k
R43
33k
R41
47k
R42
4.7u
C7
330n
C31
10k
R45
10k
R46
47k
R14
TL072P
IC1B
GND
R44
100R
+12V
C26
10u
4.7u
C28
accent
base level
R15
220k
1k
R4
Q1
J112
100k
R1
68k
R3
22k
R6
220k
R7
33k
R8
C4
22u
CN7
AC out
to AC level pot
C1
4.7u
D3
1N4148
1k
R9
220n
C2
470k
R10
1N4148
D1
2.2M
R5
C3
22u
Accent mixer +
modified DR-55 accent circuit
BD in
from BD level pot
SD in
from SD level pot
HH in
from HH level pot
HT in
from HT level pot
LT in
from LT level pot
CL/RS in
from CL/RS
level pot
AC in
from AC level pot
CN5
CN8
CN11
CN12
CN13
CN14
CN15
39k
R12
33k
R13
33k
R17
39k
R18
39k
R19
56k
R20
39k
R21
39k
R11
TL072P
IC1A
C8
4.7u
C5
4.7u
CN1
main mix out
to volume pot
Main mix
R54
100R
C39
10u
R25
1M
noise gen level
R23
33k
100k
R47
R39
1M
C6
1u
R22
3.3k
C34
1u
BC108B
Q2
R50
10k
R49
10k
TL072P
IC3A
C38
4.7u
NOISE_OUT1
NOISE_OUT2
KR-55 noise generator
15V
unreg
VCC
GND
C32
10u
100n
C30
IN
OUT
GND
IC2
78L12
C29
4.7u
Korg KR-55 + Boss DR-55 inspired
main mixer / accenter / noise generator
JK / 9.12.2018